PACSystems™ RX3i System Manual

Warnings and Caution Notes as Used in this Publication

⚠ WARNING

Warning notices are used in this publication to emphasize that hazardous voltages, currents, temperatures, or other conditions that could cause personal injury exist in this equipment or may be associated with its use.

In situations where inattention could cause either personal injury or damage to equipment, a Warning notice is used.

⚠ CAUTION

Caution notices are used where equipment might be damaged if care is not taken.

Note: Notes merely call attention to information that is especially significant to understanding and operating the equipment.

These instructions do not purport to cover all details or variations in equipment, nor to provide for every possible contingency to be met during installation, operation, and maintenance. The information is supplied for informational purposes only, and Emerson makes no warranty as to the accuracy of the information included herein. Changes, modifications, and/or improvements to equipment and specifications are made periodically and these changes may or may not be reflected herein. It is understood that Emerson may make changes, modifications, or improvements to the equipment referenced herein or to the document itself at any time. This document is intended for trained personnel familiar with the Emerson products referenced herein.

Emerson may have patents or pending patent applications covering subject matter in this document. The furnishing of this document does not provide any license whatsoever to any of these patents.

Emerson provides the following document and the information included therein as-is and without warranty of any kind, expressed or implied, including but not limited to any implied statutory warranty of merchantability or fitness for particular purpose.

Contents

Table of Figures xix

Section 1: Introduction 1

1.1 Revisions of this Manual 1
1.2 Overview 5
1.2.1 Features 5
1.2.2 Programming and Configuration 7
1.2.3 PACSystems Documentation 7
1.3 Modules for RX3i Systems 10
1.3.1 RX3i Modules (IC695 and IC694) 11
1.3.2 Series 90-30 (IC693) Modules for RX3i Systems 14
1.3.3 Series 90-30 Modules that Cannot Be Used in an RX3i System 16
1.4 Backplanes and Power Supplies 19
1.4.1 RX3i Universal Backplane 19
1.4.3 Expansion (12-slot and 16-slot Universal Backplanes Only) 21
1.4.4 Backplanes Available for the RX3i System 23
1.4.5 Power Supplies for RX3i Systems 24
1.5 Expansion Systems 26
1.5.1 Expansion System with One Expansion or Remote Backplane 27
1.5.3 Using Multiple Expansion and Remote Backplanes 28

Section 2: Installation 30

2.1 Pre-Installation Check 31
2.2 System Layout Guidelines 31
2.3 Enclosures 33
2.3.1 RX3i Universal Backplane Dimensions and Spacing 34
2.3.2 RX3i Serial Expansion Backplane Dimensions and Spacing 35
2.4 System Wiring 36
2.4.1 Color Coding Wires 37
2.4.3 Wire Routing 38
2.5 System Grounding 39
2.5.1 Ground Conductors 40
2.5.2 Backplane Safety and EMC Reference Grounding 41
2.5.3 Power Supply Grounding 41
2.5.4 Programmer Grounding 43
2.5.5 Shield Grounding 43
2.6 System Installation 44

2.6.1 Universal Backplanes 44
2.6.2 Expansion Backplanes 47
2.6.3 Mounting a Backplane in a 19-Inch Rack 50
2.6.4 Modules 53
2.6.5 CPU Installation 81
2.6.6 Power Supplies 82
2.6.7 Serial Bus Transmitter Module 89

Section 3: Backplanes 91

3.1 RX3i Universal Backplanes: IC695CHS007, IC695CHS012, IC695CHS016 92
3.1.1 Dual-Bus Backplane 93
3.1.2 PCI-Only Backplane 93
3.1.3 RX3i Universal Backplane Features 94
3.1.4 Module Locations in a 12- or 16-Slot Universal Backplane 98
3.1.5 Module Locations in a 7-Slot Universal Backplane 100
3.2 Serial Expansion Backplanes: IC694CHS392, IC694CHS398 103

Section 4: Power Supplies 105

4.1 Power Supply Overview 106
4.1.2 Power Supply Field Wiring 108
4.1.3 24 Vdc Isolated Power 108
4.1.4 RX3i IC695 Power Supply Outputs 109
4.1.5 RX3i IC694 Power Supply Outputs 110
4.2 Module Load Requirements 111
4.2.1 Power Supply Loading Example 117
4.2.2 Load Sharing / Redundancy 118
4.3 AC Power Supply Connections for Floating Neutral (IT) Systems 122
4.3.1 Special Instructions for Floating Neutral Systems 122
4.3.3 Non-Floating Neutral System 124
4.4 Power Supply, 120/240 Vac or 125 Vdc, 40 W: IC695PSA040 125
4.4.1 Specifications: PSA040 129
4.4.2 Field Wiring: PSA040 132
4.5 Multi-purpose Power Supply, 120/240 Vac or 125 Vdc, 40 W: IC695PSA140 134
4.5.1 Specifications: PSA140 137
4.5.2 Field Wiring: PSA140 141
4.6 Power Supply, 24 Vdc, 40 W: IC695PSD040 143
4.6.1 Specifications: PSD040 146
4.6.2 Field Wiring: PSD040 149

4.7 Multi-Purpose Power Supply, 24 Vdc, 40 W: IC695PSD140 152
4.7.2 Specifications: PSD140 155
4.7.3 Field Wiring: PSD140 158
4.8 Power Supply, 24 Vdc, 80 W: IC695PSD180 160
4.8.1 Specifications: PSD180 163
4.8.2 Field Wiring: PSD180 170
4.9 Power Supply, 120/240 Vac or 125 Vdc: IC694PWR321 172
4.9.1 Specifications: PWR321 173
4.9.3 Field Wiring: PWR321 175
4.10 Power Supply, 120/240 Vac or 125 Vdc High Capacity: IC694PWR330 177
4.10.2 Specifications: PWR330 179
4.10.3 Field Wiring: PWR330 180
4.11 Power Supply, 24 Vdc High-Capacity: IC694PWR331 182
4.11.2 Specifications: PWR331 184
4.11.4 Field Wiring: PWR331 187

Section 5: Serial Bus Transmitter & Expansion Cables 189

5.1 Serial Bus Transmitter Module: IC695LRE001 190
5.1.1 Specifications: LRE001 191
5.1.2 Expansion Module Installation 191
5.1.3 Powering Down Individual Expansion or Remote Backplanes 192
5.2 I/O Bus Expansion Cables: IC693CBL300, 301, 302 ,312, 313 192
5.2.1 Cable with Two Connectors: IC693CBL302 193
5.2.2 Cables with Three Connectors: IC693CBL300, 301, 312, 313 194
5.3 Specifications: IC693CBL300, 301, 302, 312, 313 195
5.3.1 Expansion Port Pin Assignments 196
5.3.2 Building Custom Cables 197
5.3.3 Termination Requirement for Expansion or Remote System . 199

Section 6: Discrete Input Modules 201

6.1 Input Module, 120 Vac, 8-Point Isolated: IC694MDL230 202
6.1.1 Specifications: MDL230 203
6.1.2 Field Wiring: MDL230 204
6.2 Input Module, 240 Vac, 8-Point Isolated: IC694MDL231 205
6.2.1 Specifications: MDL231 206
6.2.2 Field Wiring: MDL231 207
6.3 Input Module, 120 Vac, 16-Point: IC694MDL240 208
6.3.1 Specifications: MDL240 209
6.3.2 Thermal Derating: MDL240 209

6.3.4 Field Wiring: MDL240 211
6.4 Input Module, 24 Vac/Vdc 16-Point Pos/Neg Logic IC694MDL241 212
6.4.1 Specifications: MDL241 213
6.4.2 Field Wiring: MDL241 214
6.5 Input Module, 120 Vac 16-Point Isolated: IC694MDL250 215
6.5.1 Specifications: MDL250 216
6.5.2 Input Filter Setup: MDL250 217
6.5.3 Module Status Data: MDL250 217
6.5.5 Field Wiring: MDL250 219
6.6 Input Module, 120 Vac, 32-Point: IC694MDL260 220
6.6.1 Specifications: MDL260 221
6.6.2 Thermal Derating: MDL260 221
6.6.4 Input Filter Setup: MDL260 223
6.6.5 Module Status Data: MDL260 223
6.6.7 Field Wiring: MDL260 225
6.7 Input Module, 125 Vdc Pos/Neg, 8-Point IC694MDL632 226
6.7.1 Specifications: MDL632 227
6.7.2 Thermal Derating: MDL632 227
6.7.4 Field Wiring: MDL632 229
6.8 Input Module, 24 Vdc Pos/Neg, 8-Point IC694MDL634 230
6.8.1 Specifications: MDL634 231
6.8.2 Field Wiring: MDL634 232
6.9 Input Module, 125 Vdc Pos/Neg, 16-Point IC694MDL635 233
6.9.1 Specifications: MDL635 234
6.9.2 Field Wiring: MDL635 236
6.10 Input Module, 24 Vdc Pos/Neg, 16-Point IC694MDL645 237
6.10.1 Specifications: MDL645 238
6.10.2 Field Wiring: MDL645 239
6.11 Input Module: 24 Vdc 16-Point Pos/Neg Logic IC694MDL646 240
6.11.1 Specifications: MDL646 241
6.11.2 Field Wiring: MDL646 242
6.12 Input Module: 48 Vdc 16-Point Isolated Pos/Neg Logic IC694MDL648 243
6.12.1 Specifications: MDL648 244
6.12.2 Thermal Derating: MDL648 244
6.12.4 Field Wiring: MDL648 246
6.13 Input Modules, 5/12 Vdc (TTL) 32-Point Pos/Neg Logic IC694MDL654, IC694MDL655, and IC694MDL658 247
6.13.1 Specifications: MDL654, MDL655, MDL658 248

6.13.2 Thermal Derating: MDL654 & MDL655 250
6.13.3 Field Wiring: MDL654, MDL655, MDL658 251
6.14 Input Module, 24 Vdc 32-Point Grouped IC694MDL660 253
6.14.1 Specifications: MDL660 255
6.14.2 Thermal Derating: MDL660 256
6.14.3 Field Wiring: MDL660 257
6.14.4 Module Status Data: MDL660 258
6.14.5 Input Filter Setup: MDL660 258
6.15 Input Module, 24 Vdc 16-Point Grouped IC695MDL664 260
6.15.1 LED Operation: MDL664 261
6.15.2 Specifications: MDL664 262
6.15.3 Thermal Derating: MDL664 263
6.15.4 Field Wiring: MDL664 264
6.15.5 Circuit Operation: MDL664 265
6.15.6 Input and Output Data Formats: MDL664 269
6.15.7 Diagnostics: MDL664 271
6.15.8 Configuration: MDL664 273
6.16 Input Simulator, 8-/16-Point IC694ACC300 276
6.16.1 Specifications: ACC300 276

Section 7: Discrete Output Modules 278

7.1 Output Module, 120 Vac, 0.5 A, 12-Point: IC694MDL310 279
7.1.1 Specifications: MDL310 280
7.1.2 Thermal Derating: MDL310 280
7.1.4 Field Wiring: MDL310 282
7.2 Output Module, 120/240 Vac, 2 A, 8-Point: IC694MDL330 283
7.2.1 Specifications: MDL330 284
7.2.2 Thermal Derating: MDL330 284
7.2.4 Field Wiring: MDL330 286
7.3 Output Module, 120 Vac, 0.5 A, 16-Point: IC694MDL340 287
7.3.1 Specifications: MDL340 288
7.3.2 Thermal Derating: MDL340 289
7.3.3 Field Wiring: MDL340 291
7.4 Output Module, 120/240 Vac 16-Point Isolated: IC694MDL350 292
7.4.1 Specifications: MDL350 294
7.4.2 Field Wiring: MDL350 296
7.4.3 Module Status Data: MDL350 297
7.5 Output Module, 120/240 Vac Isolated, 2 A 5-Point: IC694MDL390 298
7.5.1 Specifications: MDL390 299

7.5.2 Thermal Derating MDL390 299
7.5.3 Field Wiring: MDL390 300
7.6 Output Module, 12/24 Vdc 2 A Positive Logic 8-Point: IC694MDL730 302
7.6.1 LEDs 302
7.6.2 Specifications: MDL730 304
7.6.3 Thermal Derating MDL730 304
7.6.4 Field Wiring: MDL730 305
7.7 Output Module, 12/24 Vdc 0.5 A Positive Logic 8-Point: IC694MDL732 306
7.7.1 Specifications: MDL732 307
7.7.2 Field Wiring: MDL732 308
7.8 Output Module 125 Vdc, 1 A, 6-Point Isolated Positive/Negative: IC694MDL734 309
7.8.1 Specifications: MDL734 310
7.8.2 Field Wiring: MDL734 311
7.9 Output Module, 12/24 Vdc, 0.5 A, Positive Logic, 16-Point: IC694MDL740 312
7.9.1 Specifications: MDL740 314
7.9.2 Field Wiring: MDL740 315
7.10 Output Module, 12/24 Vdc, 0.5 A, Negative Logic 16-Point: IC694MDL741 316
7.10.1 Specifications: MDL741 318
7.10.2 Field Wiring: MDL741 319
7.11 Output Module, 12/24 Vdc 1 A Positive Logic, 16-Point with ESCP per Group: IC694MDL742 320
7.11.1 Electronic Short-Circuit Protection (ESCP) 321
7.11.2 Specifications: MDL742 321
7.11.3 Thermal Derating: MDL742 322
7.11.4 Field Wiring: MDL742 323
7.12 Output Module, 5/24 Vdc (TTL) Negative Logic, 32-Point: IC694MDL752 324
7.12.1 Specifications: MDL752 325
7.12.2 Field Wiring: MDL752 326
7.12.3 Typical Connections: MDL752 327
7.13 Output Module, 12/24 Vdc, 0.5 A Positive Logic, 32-Point: IC694MDL753 329
7.13.1 Specifications: MDL753 330
7.13.2 Field Wiring: MDL753 331

7.14 Output Module, 12/24 Vdc, 0.75 A Positive Logic, 32-Point with ESCP per Group: IC694MDL754 332
7.14.2 Electronic Short-Circuit Protection (ESCP) 334
7.14.3 LEDs: MDL754 334
7.14.4 Specifications: MDL754 335
7.14.5 Thermal Derating: MDL754 336
7.14.6 Output Defaults: MDL754 337
7.14.8 Field Wiring: MDL754 339
7.14.9 Module Status Data: MDL754 340
7.14.10 ESCP Status Data: MDL754 340
7.15 Output Module, 12/24 Vdc, 0.5 A Positive Logic, 32-Point with ESCP per Group: IC694MDL758 341
7.15.1 Electronic Short-Circuit Protection (ESCP) 342
7.15.2 LEDs: MDL758 342
7.15.4 Specifications: MDL758 344
7.15.5 Module Data: MDL758 345
7.15.6 Field Wiring: MDL758 346
7.16 Output Module, 24/125 Vdc, 2 A Positive Logic, 16-Point with ESCP & Diagnostics: IC695MDL765 347
7.16.1 Electronic Short-Circuit Protection (ESCP) 348
7.16.2 LED Operation: MDL765 349
7.16.3 Specifications: MDL765 350
7.16.5 Field Wiring: MDL765 353
7.16.6 Circuit Operation: MDL765 354
7.16.7 Input and Output Data Formats: MDL765 355
7.16.8 Diagnostics: MDL765 357
7.16.9 Configuration: MDL765 362
7.17 Output Module, Isolated Relay, N.O., 4 A, 16-Point: IC694MDL916 364
7.17.1 Specifications: MDL916 366
7.17.2 Field Wiring: MDL916 370
7.18 Output Module, Isolated Relay, N.O., 4 A, 8-Point: IC694MDL930 371
7.18.1 Specifications: MDL930 372
7.18.2 Field Wiring: MDL930 376
7.19 Output Module, Isolated Relay, N.C. and Form C, 8 A, 8-Point: IC694MDL931 377
7.19.1 Specifications: MDL931 378
7.19.2 Field Wiring: MDL931 382
7.20 Output Module, Relay Output, N.O., 2 A, 16-Point: IC694MDL940 383
7.20.1 Specifications: MDL940 385

7.20.3 Field Wiring: MDL940 388

Section 8: Discrete Mixed I/O Modules 389

8.1 High-Speed Counter Module: IC694APU300 390
8.1.1 Counter Types: APU300 391
8.1.3 Status LEDs: APU300 394
8.1.4 Specifications: APU300 396
8.1.5 Field Wiring: APU300 398
8.1.6 ESCP Outputs with 1.5 Amps per Point Minimum 402
8.2 Serial I/O Processor Module: IC694APU305 404
8.2.1 Specifications: APU305 406
8.2.2 Field Wiring: APU305 408
8.2.3 Configuration: APU305 410
8.2.4 Module Data: APU305 412
8.3 High-Speed Counter Modules: IC695HSC304, IC695HSC308 422
8.3.1 LEDs: HSC304 & HSC308 423
8.3.2 Specifications: HSC304 & HSC308 425
8.3.3 Field Wiring: HSC304 & HSC308 429
8.4 Mixed I/O Module: IC694MDR390 432
8.4.1 LEDs: MDR390 432
8.4.3 Specifications: MDR390 434
8.4.4 Field Wiring: MDR390 436

Section 9: Analog Input Modules 437

9.1 Analog Input Modules Isolated Current/Voltage: IC695ALG106 and IC695ALG112 438
9.1.1 Features 438
9.1.2 Specifications: ALG106 & ALG112 440
9.1.4 Field Wiring: ALG106 443
9.1.5 Field Wiring: ALG112 444
9.1.7 Configuration: ALG106 & ALG112 446
9.2 Analog Input Module 4-Channel Differential Voltage: IC694ALG220 461
9.2.1 Isolated +24 Vdc Power 461
9.2.2 LEDs: ALG220 461
9.2.1 Specifications: ALG220 463
9.2.2 Data Format: ALG220 463
9.2.3 Field Wiring: ALG220 465
9.3 Analog Input Module 4-Channel Differential Current: IC694ALG221 467
9.3.1 Isolated +24 Vdc Power 467

9.3.2 LEDs: ALG221 468
9.3.3 Specifications: ALG221....468
9.3.4 Data Format: ALG221....468
9.3.5 Field Wiring: ALG221....470
9.4 Analog Input Module 16-/8-Channel Voltage: IC694ALG222 471
9.4.1 Isolated +24 Vdc Power 471
9.4.2 LEDs: ALG222 471
9.4.4 Specifications: ALG222....473
9.4.5 Configuration: ALG222 474
9.4.6 Data Format: ALG222....476
9.4.7 Field Wiring: ALG222....478
9.5 Analog Input Module 16-Channel Current: IC694ALG223 480
9.5.1 Module Power....480
9.5.2 LEDs: ALG223 480
9.5.3 Specifications: ALG223....481
9.5.4 Configuration: ALG223 482
9.5.5 Data Format: ALG223....484
9.5.6 Field Wiring: ALG223....487
9.6 Analog Input module Advanced Diagnostics 16-Channel Voltage: IC694ALG232....488
9.6.1 Features 489
9.6.2 Isolated +24 Vdc Power 489
9.6.3 LEDs: ALG232 490
9.6.4 Specifications: ALG232....491
9.6.5 Configuration: ALG232 492
9.6.6 Channel Input Data: ALG232 501
9.6.7 Field Wiring: ALG232....503
9.7 Analog Input module Advanced Diagnostics 16-Channel Current: IC694ALG233....505
9.7.1 Module Power....505
9.7.2 Features 505
9.7.4 LEDs: ALG233 507
9.7.5 Specifications: ALG233....508
9.7.6 Configuration: ALG233 509
9.7.7 Field Wiring: ALG233....516
9.8 Analog Input Module 8-/4-Channel Current/Voltage: IC695ALG608 Analog Input Module 16-/8-Channel Current/Voltage: IC695ALG616 518
9.8.1 Features 518

9.8.2 LEDs: ALG608 & ALG616 519
9.8.3 Specifications: ALG608 & ALG616 521
9.8.4 Configuration: ALG608 & ALG616 523
9.8.6 Module Data: ALG608 & ALG616 531
9.8.7 Field Wiring: ALG608 & ALG616, Single-Ended Mode 535
9.8.8 Field Wiring: ALG608 & ALG616, Differential Mode 537

Section 10: Analog Output Modules 539

10.1 Analog Output Module Voltage 2-Channel: IC694ALG390 540
10.1.1 Isolated +24 Vdc Power 540
10.1.2 LED 540
10.1.4 Specifications: ALG390 542
10.1.5 Module Data: ALG390 542
10.1.6 Field Wiring: ALG390 544
10.2 Analog Output Module Current 2-Channel: IC694ALG391 546
10.2.1 Isolated +24 Vdc Power 546
10.2.2 LED 547
10.2.4 Specifications: ALG391 548
10.2.5 Load Current Derating 549
10.2.6 Module Data: ALG391 549
10.2.7 Field Wiring: ALG391 551
10.3 Analog Output Module Current/Voltage 8-Channel: IC694ALG392 554
10.3.1 Isolated +24 Vdc Power 555
10.3.2 LEDs: ALG392 555
10.3.3 Specifications: ALG392 556
10.3.4 Current and Voltage Ranges and Resolution: ALG392 559
10.3.5 Module Data: ALG392 562
10.3.6 Field Wiring: ALG392 563
10.3.7 Configuration: ALG392 564
10.4 Analog Output Module 4-Channel Current/Voltage: IC695ALG704
Analog Output Module 8-Channel Current/Voltage: IC695ALG708 565
10.4.1 Isolated +24 Vdc Power 565
10.4.3 Features: ALG704 & ALG708 566
10.4.4 LEDs: ALG704 and ALG708 566
10.4.6 Specifications: ALG704 and ALG708 568
10.4.7 Configuration: ALG704 and ALG708 570
10.4.8 Module Data: ALG704 and ALG708 584
10.4.10 Field Wiring: ALG704 and ALG708 589
10.6 Analog Current/Voltage Output Isolated Module 8-Channel, IC695ALG808 591

10.6.1 Isolated +24 Vdc Power 591
10.6.2 Features 592
10.6.3 LEDs: IC695ALG808 592
10.6.5 Specifications: IC695ALG808 594
10.6.6 Configuration: IC695ALG808 595
10.6.7 Module Data: IC695ALG808 606
10.6.9 Field Wiring: IC695ALG808 610

Section 11: Analog Modules with HART Communications 612

11.1 Overview of HART Communications for PACSystems RX3i 612
11.1.1 RX3i HART Module Operation 613
11.1.2 Using DO I/O with HART Modules 615
11.1.3 Using a Hand-held Calibrator with RX3i Analog HART Modules 616
11.1.4 HART Pass-Through Functionality 617
11.2 Analog Input Module 16-/8-Channel Current/Voltage with HART: IC695ALG626 Analog Input Module 8-/4-Channel Current/Voltage with HART: IC695ALG628 619
11.2.1 Features 620
11.2.2 Specifications: ALG626 and ALG628 621
11.2.3 Configuration: ALG626 and ALG628 626
11.2.4 Input Module Data Formats: ALG626 and ALG628 637
11.2.5 Field Wiring: IC695ALG626 and ALG628, Single-Ended Mode 643
11.2.6 Field Wiring: IC695ALG626 and ALG628, Differential Mode 646
11.2.7 HART Device Connections 648
11.3 Analog Output Module 8-Channel Current/Voltage with HART: IC695ALG728 649
11.3.1 Features 650
11.3.2 Isolated +24 Vdc Power 650
11.3.3 LEDs: ALG728 651
11.3.4 Specifications: ALG728 652
11.3.5 Configuration: ALG728 655
11.4 Example 661
11.4.1 Output Module Data Formats: ALG728 665
11.4.2 Field Wiring: ALG728 669
11.4.3 HART Device Connections 670
11.5 HART Reference Data 671
11.5.1 HART Status Data 671

11.5.2 HART Data Format 672
11.6 COMMREQs for HART Modules 673
11.6.1 Get HART Device Information, COMMREQ 1 Command Block 674
11.6.2 Remote Get HART Device Information, Command Block 675
11.6.3 COMMREQ Status Word 679
11.6.4 Remote and Local Get HART Device Information, Reply Data Format 680
11.6.5 Sending a HART Pass-Through Command to a HART Device .. 682
11.6.6 HART Pass-Through Commands and Command Codes for RX3i Modules 687
11.6.8 HART Communications Status 696
11.7 Function Blocks to Read HART Data 699
11.7.1 DYN_HART_STRUCT 699
11.7.2 ALL_HART_STRUCT 701
11.8 Converting HART Data to / from RX3i Format 704
11.8.1 Converting Floating-Point Data (Endian Flip) 705
11.8.2 ASCII_PACK 706
11.8.4 ASCII_UNPACK 710
11.8.5 Example Function Block 3: ASCII_UNPACK: 711

Section 12: Analog Mixed I/O Modules 713

12.1 Analog Module 4-Input/2-Output Current/Voltage: IC694ALG442 ... 714
12.1.1 Features 714
12.1.2 Isolated +24 Vdc Power 714
12.1.3 LEDs: ALG442 715
12.1.4 Specifications: ALG442 716
12.1.5 Field Wiring: ALG442 718
12.1.6 Input Scaling: ALG442 719
12.1.7 Output Scaling: ALG442 720
12.1.8 I/O Data: ALG442 721
12.1.10 Status Data: ALG442 723
12.1.12 Configuration: ALG442 724
12.1.13 Ramp Mode Operation: ALG442 727
12.1.14 Changing Module Operation on Command: ALG442 729
12.2 Analog Module 4-Input/2-Output Current/Voltage with Advanced Diagnostics: IC694ALG542 736
12.2.1 Features 736
12.2.2 Isolated +24 Vdc Power 737
12.2.4 LEDs: ALG542 738
12.2.5 Specifications: ALG542 738

12.2.6 Field Wiring: ALG542 741
12.2.8 Input Scaling: ALG542 743
12.2.9 Output Scaling: ALG542 744
12.2.10 I/O Data: ALG542 744
12.2.11 Status Data: ALG542 748
12.2.12 Configuration: ALG542 749
12.2.13 Rate of Change Alarms: ALG542 759
12.2.14 Ramp Mode Operation: ALG542 760
12.2.15 Clamp Mode Operation: ALG542 762
12.2.16 Changing Module Operation on Command: ALG542 763

Section 13: Universal Analog Input Module 770

13.1 Universal Analog Input: Voltage, Current, Resistance, RTD, Thermocouple, 8-Channel + 2 CJC: IC695ALG600 771
13.2 Features 772
13.3 LEDs: ALG600 773
13.4 Specifications: ALG600 774
13.4.1 Typical Accuracy Specifications 776
13.4.3 Maximum Accuracy Specifications 778
13.6 Field Wiring: ALG600 780
13.6.1 Installing CJC Sensors 783
13.6.2 Connecting Channels to the Same Thermocouple Point 783
13.8 Configuration: ALG600 785
13.8.1 Module Parameters 785
13.8.2 Channel 1 – 8 Parameters 786
13.8.3 Input Scaling: ALG600 787
13.8.4 Example 1 787
13.8.5 Example 2 789
13.8.6 Rate of Change Alarms: ALG600 790
13.8.7 Using Alarming: ALG600 793
13.8.8 Using Interrupts 793
13.8.9 Example: 793
13.8.10 CJC Parameters 794
13.8.11 CJC Scan Enable 795
13.9 Module Data: ALG600 796
13.9.1 Resolution and Update Time 797
13.9.2 Isolated Input Groups 797
13.9.3 Channel Diagnostic Data: ALG600 798
13.9.5 Module Status Data: ALG600 800
13.9.6 Terminal Block Detection 800

Section 14: Thermocouple Input Modules 801

14.1 Thermocouple Input 6-/12-Channel Isolated Modules IC695ALG306 & IC695ALG312 802
14.1.1 Features 802
14.1.2 Specifications: ALG306 & ALG312 803
14.2 Thermocouple Input 12-Channel Isolated Module IC695ALG412 807
14.2.1 Features 807
14.2.2 Specifications: ALG412 808
14.3 Thermocouple Module Operation: ALG306, ALG312 & ALG412 812
14.3.1 LEDs: ALG306, ALG312 & ALG412 812
14.3.2 Field Wiring: ALG306, ALG312, & ALG412 813
14.3.3 Configuration: ALG306, ALG312 & ALG412 816
14.3.4 Module Data: ALG306, ALG312 & ALG412 826

Section 15: RTD Input Module 829

15.1 RTD Input 8-Channel Isolated Module IC695ALG508 830
15.1.1 Features 830
15.1.3 LEDs: ALG508 832
15.1.4 Specifications: ALG508 833
15.1.6 Field Wiring: ALG508 838
15.1.7 Configuration: ALG508 840
15.1.8 Module Input Data: ALG508 849

Section 16: Special Purpose Modules 852

16.1 RX3i I/O Link Interface Module: IC694BEM320 853
16.1.1 Specifications 853
16.1.2 I/O Size Selection: BEM320 854
16.1.3 LEDs: BEM320 854
16.1.4 Serial Ports: BEM320 854
16.3 RX3i I/O Link Master Module: IC694BEM321 856
16.3.1 Specifications: BEM321 856
16.3.2 LEDs: BEM321 857
16.3.3 Restart Pushbutton: BEM321 857
16.3.4 Serial Port: BEM321 857
16.4 RX3i Genius Bus Controller: IC694BEM331 858
16.4.1 Features 858
16.4.2 LEDs: BEM331 858
16.4.3 Specifications: BEM331 859
16.4.4 Field Wiring: BEM331 860

16.5 RX3i Serial Communications Modules: IC695CMM002, IC695CMM004 864
16.5.1 Features 864
16.6 LEDs: CMM002 & CMM004 865
16.6.1 Specifications: CMM002 and CMM004 866
16.6.2 Serial Ports: CMM002 & CMM004 867
16.7 RX3i Control Memory Xchange Module: IC695CMX128 869
16.7.1 Features 870
16.7.2 LEDs: CMX128 871
16.7.3 Specifications: CMX128 871
16.7.4 Optical Transceiver: CMX128 872
16.8 RX3i Redundancy Memory Xchange Modules: IC695RMX128, IC695RMX228 873
16.8.1 Features: RMX128 & RMX228 874
16.8.3 Specifications: RMX128 & RMX228 876
16.9 RX3i DeviceNet Master Module: IC694DNM200 877
16.9.1 Features 877
16.9.2 LEDs and Connectors: DNM200 878
16.9.3 Specifications: DNM200 878
16.9.5 The DeviceNet Bus 880
16.10 Motion Mate Module: IC694DSM314 885
16.10.1 Overview: DSM314 886
16.10.2 Specifications: DSM314 886
16.10.3 Features: DSM314 887
16.11 Motion Controller Module: IC694DSM324 888
16.11.2 Overview: DSM324 890
16.11.3 Features: DSM324 891
16.11.4 Specifications: DSM324 892
16.12 PACMotion Multi-Axis Motion Controller: IC695PMM335 893
16.12.1 Servo Types Supported 894
16.12.2 Features: PMM335 894
16.12.3 Fiber I/O Terminal Block 895
16.12.4 Features 896
16.14 IEC 61850 Ethernet Communication Module: IC695ECM850 897
16.14.1 Specifications: ECM850 898
16.15 Ethernet Interface Module: IC695ETM001 902
16.15.1 Ethernet Interface Specifications: 903
16.15.2 Ethernet Interface Ports 903
16.15.3 Station Manager 904

16.15.4 Ethernet Global Data (EGD) 904
16.15.5 ETM001-Jx Interface Controls and Indicators 905
16.15.6 ETM001-Kxxx Interface Controls and Indicators 907
16.17 RX3i DNP3 Outstation Module: IC695EDS001 909
16.17.1 Module features: 909
16.18 RX3i Ethernet IEC 104 Server Module 910
16.18.1 Module Features 910
16.20 Ethernet Network Interface Unit: IC695NIU001 912
16.20.1 Ethernet NIU Features 912
16.20.3 Compatibility 914
16.20.4 Specifications: NIU001 914
16.20.5 Ethernet Global Data Features 914
16.20.6 Ports 915
16.21 Ethernet Network Interface Unit: IC695NIU001 PLUS 916
16.21.1 Compatibility 917
16.21.2 Features: Ethernet NIU001 PLUS 917
16.21.3 Ethernet Global Data Features 918
16.21.4 Ethernet NIU COMMREQ Support 918
16.21.6 Specifications: NIU001 PLUS 920
16.21.7 NIU001 PLUS vs. NIU001 Classic Comparison 921
16.21.8 Ports 922
16.22 PROFIBUS Master Module: IC695PBM300 923
16.22.1 Features 923
16.22.2 PROFIBUS Master Module Controls and Indicators 924
16.22.3 Specifications: PBM300 924
16.23 PROFIBUS Slave Module: IC695PBS301 925
16.23.1 PROFIBUS Slave Module Controls and Indicators 926
16.23.2 Specifications: PBS301 926
16.24 PROFINET Controller Module: IC695PNC001 927
16.24.1 Features: 927
16.24.3 Specifications: PNC001 929
16.25 PROFINET Scanner Module: IC695PNS001/IC695PNS101 932
16.25.1 Features 932
16.25.2 Front Panel Port 933
16.25.3 LED Indications: PNS001 933
16.25.5 Specifications: PNS001 938
16.25.6 Compatibility: PNS001 940
16.25.8 Compatibility: PNS101 942

16.26 RX3i CEP Carrier: IC695CEP001 RX3i CEP Expansion Carrier: IC694CEE001 943
16.26.1 Features 944
16.26.2 Normal Operation of Individual LEDs: CEP001 & CEE001 944
16.26.3 Ordering Information 946
16.26.4 Specifications 947
16.26.5 Quick Start: CEP001 & CEE001 948
16.26.6 Supported I/O Modules 959
16.27 Genius Communications Gateway Module IC695GCG001 960
16.27.1 LED Indications: GCG001 961
16.27.2 Specifications: GCG001 964
16.28 IC695PRS015 Pressure Transducer Module 965
16.28.1 LEDs: PRS015 966
16.28.2 Specifications: PRS015 966
16.28.4 PRS015 Configuration 968
16.28.5 Module Status Data: PRS015 972
16.28.7 Input Channel Scaling: PRS015 973
16.28.8 Channel Diagnostic Reporting: PRS015 974
16.28.9 Command Data: PRS015 975
16.28.10 Wiring: PRS015 977

Section 17: Terminal Blocks and Interconnect Cables ... 979

17.1 High-Density Module-Mounted Terminal Blocks 981
17.1.1 Terminal Blocks for High-Density RX3i Modules 981
17.1.3 Installing and Removing High-Density Terminal Blocks 986
17.2 Terminal Block Quick Connect (TBQC) System 991
17.2.1 Low-Density TBQC System Overview 992
17.2.3 Low-Density TBQC System Variant for 32-Point I/O Modules with Dual D-Connectors 1009
17.2.4 High-Density TBQC System Overview 1013

Appendix A: Product Certifications and Installation Guidelines for Conformance 1022

A.1 RX3i Agency Approvals 1022
A.2 UL Class 1 Division 2 Hazardous Areas Requirements 1024
A.3 ATEX Zone 2 Hazardous Areas Requirements 1025
A.4 DNVGL Type Approval Requirements 1025
A.5 Standards 1025
A.6 Additional RX3i Specifications 1026

A.7 Government Regulations 1031
A.8 Installation Guidelines for Conformance to Standards 1032
A.9 Requirements for Installation in a Metal Enclosure 1034
A.10 Shielded Cable Alternative to Conduit 1034

Appendix B: Calculating Heat Dissipation 1040

B.1 Module Heat Dissipation 1040
B.2 Power Supply Heat Dissipation 1041

Appendix C: Cable Shield Clamping Assembly 1045

C.1 Installing the Cable Clamp Assembly 1046
C.2 Cable Diameter 1046

Table of Figures

Figure 1: 12-Slot Universal Backplane IC695CHS012 19
Figure 2: LRE001 21
Figure 3: 5-Slot RX3i Serial Expansion Backplane IC694CHS398 21
Figure 4: RX3i System using One Universal Backplane and One Expansion Backplane 27
Figure 5: RX3i System using Multiple Expansion Backplanes 28
Figure 6: Rx3i System using Expansion and Remote Backplanes 28
Figure 7: System Layout Guidelines 32
Figure 8: RX3i Universal Backplane Dimensions and Spacing 34
Figure 9: Vertical Mounting Not Recommended 35
Figure 10: RX3i Serial Expansion Backplane Dimensions and Spacing 36
Figure 11: System Grounding 40
Figure 12: Ground Strap Installation 41
Figure 13: Grounding Bar on RX3i Universal Backplane 43
Figure 14: Location of Mounting Screws for Universal Backplane 44
Figure 15: Universal Backplane Terminal TB1 45
Figure 16: Expansion Backplane 47
Figure 17: Example of Backplane DIP Switch Setting for Rack Number 49
Figure 18: Effect on Load Rating, Vertical Mounting 49
Figure 19: Effect on Load Rating, Horizontal Mounting 50
Figure 20: IC693ACC308 Front Mount Adapter Bracket 50
Figure 21: Dimensions for Backplane with IC693ACC308 Front Mount Adapter Bracket 51
Figure 22: IC693ACC313 Recessed Mount Adapter Bracket 52
Figure 23: Installing Module in Backplane 61
Figure 24: Removing Module from Backplane 62
Figure 25: Module Door Label Front View 63
Figure 26: Wiring Diagram on Reverse Side of Door 63
Figure 27: Insertion of Door Label following Mark-up for Application 63
Figure 28: 20-Connector removable terminal block with Tie Wrap Landing Location noted 65
Figure 29: Installing Terminal Block into I/O Module 66
Figure 30: Release Lever Usage prior to Removal from I/O Module 66
Figure 31: Extraction or Insertion of Terminal Block into its Cover 68
Figure 32: Positive Logic Input Circuit 69
Figure 33: Positive Logic Output Circuit 69
Figure 34: Negative Logic Input Circuit 70
Figure 35: Negative Logic Output Circuit 70
Figure 36: Analog Input Shield Grounding with a Terminal Strip 72
Figure 37: Analog Input Shield Grounding to Common Connections 73
Figure 38: Analog Input Shields Connected to Module Terminal 74
Figure 39: 4-Wire Transducer, Externally Powered by AC or DC Supply 75
Figure 40: 2-Wire Transducer, Externally Powered by DC Supply 75
Figure 41: 3-Wire Transducer, Externally Powered by DC Supply 75
Figure 42: 2-Wire Transducer, Self-Powered 75

Figure 43: 2-Wire Transducer Connected to Two Measuring Devices....76
Figure 44: Shield Connections for Analog Output Module 78
Figure 45: Analog Output Shield Grounding with a Terminal Strip 79
Figure 46: CPE330 (example of 2-Slot CPU)....81
Figure 47: Typical RX3i Power Supply Module 82
Figure 48: Correct Wiring Practice for Power Supply Input Terminals....84
Figure 49: IC695 Power Supply Terminals 84
Figure 50: IC694 Power Supply Terminals 84
Figure 51: External Overvoltage Protection 86
Figure 52: Floating Neutral 86
Figure 53: Neutral Not Floating (Tied to Ground) 87
Figure 54: LRE001 Front View 89
Figure 55: LRE001 Attachment Using Captive Screws....89
Figure 56: 12-Slot RX3i Universal Backplane IC695CHS012....92
Figure 57: Features of RX3i Universal Backplanes....94
Figure 58: TB1 Terminal Detail 95
Figure 59: RX3i Universal Backplane Dual Connector Slot for PCI Bus & Serial Bus 96
Figure 60: Expansion Slot Connector is shown at Slot 12....97
Figure 61: Slot 6 of IC695CHS007 97
Figure 62: Configured as CPU in Slot 0, Power Supply in Slot 2 99
Figure 63: Invalid: AC Power Supply cannot be in Slot 11 99
Figure 64: Configured as CPU in slot 0, Power Supply in Slot 6....99
Figure 65: Invalid: CPU cannot be configured in Slot 11 99
Figure 66: Configured as Power Supply in Slot 0, CPU in Slot 1 99
Figure 67: Invalid: Only a Power Supply can be installed in Slot 3....99
Figure 68: Configured as CPU in Slot 0, Power Supply in Slot 2 101
Figure 69: CPU cannot be configured in Slot 6 101
Figure 70: Configured as CPU in Slot 0, Power Supply in Slot 5 102
Figure 71: I/O or Option Module cannot be installed in Slot 0....102
Figure 72: Configured as Power Supply in Slot 0, CPU in Slot 1 102
Figure 73: AC Power Supply cannot be configured in Slot 6....102
Figure 74: Serial Expansion Backplane....103
Figure 75: Example RX3i System with Expansion Backplane Racks....104
Figure 76: Outputs of Power Supply IC695PSA040....109
Figure 77: Outputs of Power Supply IC695PSD040 & IC695PSD140 109
Figure 78: Outputs of Power Supply IC695PSD180 109
Figure 79: Outputs of Power Supplies IC694PWR321, IC694PWR330, and IC694PWR331 110
Figure 80: Power Supply Connections for Load Sharing 119
Figure 81: Redundant Power Supply Connections 120
Figure 82: Connections for Power Source Redundancy 121
Figure 83: Floating Neutral 122
Figure 84: Non-Floating Neutral Wiring....124
Figure 85: IC695PSA040 125
Figure 86: PSA040 Showing Terminals & On/Off Switch 127
Figure 87: Thermal Derating Curves for PSA040 131
Figure 88: Field Wiring PSA040....132

Figure 89: Overvoltage Protection for PSA040 133
Figure 90: IC695PSA140 134
Figure 91: PSA140 Showing Terminals & On/Off Switch 135
Figure 92: Thermal Derating Curves for PSA140 139
Figure 93: Jumper Location PSA140 140
Figure 94: Field Wiring for PSA140 141
Figure 95: Overvoltage Protection for PSA140 141
Figure 96: IC695PSD040 143
Figure 97: PSD040 Terminals and Switch Locations 144
Figure 98: Thermal Derating Curves for PSD040 147
Figure 99: Field Wiring for PSD040 149
Figure 100: Overvoltage Protection for PSD040 151
Figure 101: IC695PSD140 152
Figure 102 PSD140 Terminals and On/Off Switch 153
Figure 103: Thermal Derating Curves for PSD140 156
Figure 104: Jumper Location PSD140 157
Figure 105: Field Wiring for PSD140 158
Figure 106: Overvoltage Protection for PSD140 158
Figure 107: IC695PSD180 160
Figure 108: PSD180 Terminals and Switch Locations 162
Figure 109: Thermal Derating Curves for Single Unit PSD180 165
Figure 110: Example of Typical Single PSD180 System 166
Figure 111: Typical PSD180 Single Unit System Derating 166
Figure 112: Thermal Derating Curves for Dual Unit PSD180 167
Figure 113: Example of Typical Dual PSD180 System 168
Figure 114: Typical PSD180 Dual Unit System Derating 168
Figure 115: Switch Set to Auto-Restart 169
Figure 116: Field Wiring for PSD180 170
Figure 117: Overvoltage Protection for PSD1800 171
Figure 118: IC694PWR321 172
Figure 119: Field Wiring for PWR321 175
Figure 120: Overvoltage Protection for PWR321 176
Figure 121: IC694PWR330 177
Figure 122: Field Wiring for PWR330 180
Figure 123: Overvoltage Protection for PWR330 181
Figure 124: IC694PWR331 182
Figure 125: Thermal Derating Curve for 5 Vdc Output PWR331 185
Figure 126: Field Wiring for PWR331 187
Figure 127: Overvoltage Protection for PWR331 188
Figure 128: IC695LRE001 190
Figure 129: Install LRE001 in Rightmost Connector & Secure with Captive Screws 191
Figure 130: Cable IC693CBL302 193
Figure 131: Cable IC693CBL302 Usage 193
Figure 132: Cables IC693CBL300, IC693CBL301, IC693CBL312, or IC693CBL313 194
Figure 133: Usage of Wye Cables with Terminating Plug 194
Figure 134: Construction of a Custom Shielded Cable 197

Figure 135: Wiring Diagram – Cable with Continuous Shielding 198
Figure 136: Wiring Diagram – Cable without Continuous Shielding 199
Figure 137: IC694MDL230....202
Figure 138: Field Wiring MDL230 204
Figure 139: IC694MDL231....205
Figure 140: Field Wiring MDL231 207
Figure 141: IC694MDL240....208
Figure 142: Thermal Derating MDL240 209
Figure 143: Field Wiring MDL240 211
Figure 144: IC694MDL241....212
Figure 145: Field Wiring MDL241 214
Figure 146: IC694MDL250....215
Figure 147: Field Wiring MDL250 219
Figure 148: IC694MDL260....220
Figure 149: Thermal Derating Curve MDL260....221
Figure 150: Field Wiring MDL260 225
Figure 151: IC694MDL632....226
Figure 152: Thermal Derating Curve MDL632....227
Figure 153: Field Wiring MDL632 229
Figure 154: IC694MDL634....230
Figure 155: Field Wiring MDL634 232
Figure 156: IC694MDL635....233
Figure 157: Thermal Derating MDL635 235
Figure 158: Field Wiring MDL635 236
Figure 159: IC694MDL645....237
Figure 160: Field Wiring MDL645 239
Figure 161: IC694MDL646....240
Figure 162: Field Wiring MDL646 242
Figure 163: IC694MDL648....243
Figure 164: Thermal Derating MDL648 244
Figure 165: Field Wiring MDL648 246
Figure 166: IC694MDL654....247
Figure 167: Thermal Derating MDL654 & MDL655....250
Figure 168: Left-side and Right-side Connectors MDL654, MDL655, MDL658 251
Figure 169: Attachment to Terminal Blocks for Field Wiring 251
Figure 170: Wiring for Negative Logic MDL654 252
Figure 171: IC694MDL660....254
Figure 172: Thermal Derating Curve MDL660....256
Figure 173: Field Wiring MDL660 257
Figure 174: IC695MDL664....260
Figure 175: Thermal Derating Curve MDL664....263
Figure 176: Field Wiring MDL664 264
Figure 177: Normal Thresholds MDL664 265
Figure 178: Tri-State Input Circuit Diagram 265
Figure 179: Tri-State Thresholds MDL664....265
Figure 180: Quad-State Input Circuit Diagram 267

Figure 181: Quad-State Thresholds MDL664 267
Figure 182: Effect of Input Filter Time 275
Figure 183: IC694ACC300 276
Figure 184: Mode Switch 276
Figure 185: IC694MDL310 279
Figure 186: Thermal Derating Curve MDL310 280
Figure 187: Field Wiring MDL310 282
Figure 188: IC694MDL330 283
Figure 189: Thermal Derating Curve MDL330 284
Figure 190: Field Wiring MDL330 286
Figure 191: IC694MDL340 288
Figure 192: Thermal Derating IC694MDL340C 289
Figure 193: Field Wiring MDL340 291
Figure 194: IC694MDL350 292
Figure 195: DIP Switch Setting MDL350 295
Figure 196: Field Wiring MDL350 296
Figure 197: IC694MDL390 298
Figure 198: Thermal Derating Curve MDL390 299
Figure 199: Field Wiring MDL390 300
Figure 200: IC694MDL730 302
Figure 201: Thermal Derating Curve MDL730 304
Figure 202: Field Wiring MDL730 305
Figure 203: IC694MDL732 306
Figure 204: Field Wiring MDL732 308
Figure 205: IC694MDL734 309
Figure 206: Field Wiring MDL734 311
Figure 207: IC694MDL740 313
Figure 208: Field Wiring MDL740 315
Figure 209: IC694MDL741 316
Figure 210: Field Wiring MDL741 319
Figure 211: IC694MDL742 320
Figure 212: Thermal Derating Curve MDL742 322
Figure 213: Field Wiring MDL742 323
Figure 214: IC694MDL752 324
Figure 215: Field Wiring Pinouts MDL752 326
Figure 216: Typical Connections Diagram MDL752 327
Figure 217: IC694MDL753 329
Figure 218: Field Wiring Pinouts MDL753 331
Figure 219: IC694MDL754 332
Figure 220: LED Layout MDL754 334
Figure 221: Thermal Derating Curve MDL754 336
Figure 222: DIP Switch Settings MDL754 337
Figure 223: Field Wiring MDL754 339
Figure 224: IC694MDL758 341
Figure 225: LED Layout MDL758 342
Figure 226: Field Wiring MDL758 346

Figure 227: IC695MDL765 347
Figure 228: LED Layout MDL765 349
Figure 229: Thermal Derating Curve MDL765 351
Figure 230: Field Wiring MDL765 353
Figure 231: Circuit Detail MDL765 354
Figure 232: IC694MDL916 364
Figure 233: Thermal Derating Curve MDL916 367
Figure 234: Suppression of DC Loads MDL916 368
Figure 235: Suppression of AC Loads MDL916 368
Figure 236: DIP Switch Settings MDL916 368
Figure 237: Typical Relay Output Circuit MDL916 370
Figure 238: IC694MDL930 371
Figure 239: Thermal Derating Curve MDL930 372
Figure 240: Suppression of DC Loads MDL930 374
Figure 241: Suppression of AC Loads MDL930 374
Figure 242: Field Wiring MDL930 376
Figure 243: IC694MDL931 377
Figure 244: Thermal Derating Curve MDL931 378
Figure 245: Suppression of DC Loads MDL931 380
Figure 246: Suppression of AC Loads MDL931 380
Figure 247: Field Wiring MDL931 382
Figure 248: IC694MDL940 383
Figure 249: Suppression of DC Loads MDL940 386
Figure 250: Suppression of AC Loads MDL940 386
Figure 251: Field Wiring MDL940 388
Figure 252: IC694APU300 390
Figure 253: Input Impedance APU300 397
Figure 254: Field Wiring APU300 398
Figure 255: IC694APU305 404
Figure 256: Field Wiring APU305 408
Figure 257: Typical Connections APU305 409
Figure 258: IC695HSC308 422
Figure 259: LED Layout HSC304 & HSC308 423
Figure 260: Thermal Derating HSC304 Outputs 426
Figure 261: Thermal Derating HSC308 Outputs 428
Figure 262: Field Wiring HSC304 429
Figure 263: Field Wiring HSC308 431
Figure 264: IC694MDR390 432
Figure 265: Suppression of DC Loads MDR390 435
Figure 266: Suppression of AC Loads MDR390 435
Figure 267: Field Wiring Diagram MDR390 436
Figure 268: IC695ALG112 438
Figure 269: Field Wiring ALG106 443
Figure 270: Field Wiring: ALG112 444
Figure 271: Scaling Example ALG106 or ALG112 448
Figure 272: Scaling Example ALG106 or ALG112 450

Figure 273: IC694ALG220....461
Figure 274: Input Voltage Scaling: ALG220....464
Figure 275: Field Wiring ALG220....465
Figure 276: IC694ALG221....467
Figure 277: Input Current Scaling ALG221....469
Figure 278: Field Wiring ALG221....470
Figure 279: IC694ALG222....471
Figure 280: Input Scaling ALG222....476
Figure 281: Field Wiring Single-Ended ALG222....479
Figure 282: Field Wiring Differential ALG222....479
Figure 283: IC694ALG223....480
Figure 284: Input Scaling ALG223....484
Figure 285: Field Wiring ALG223....487
Figure 286: Connection Example 1 ALG222....488
Figure 287: Connection Example 2 ALG222....488
Figure 288: IC694ALG232....489
Figure 289: Input Scaling ALG232....497
Figure 290: Input Scaling ALG232....498
Figure 291: Field Wiring Single-Ended ALG232....504
Figure 292: Field Wiring Differential ALG232....504
Figure 293: IC694ALG233....505
Figure 294: Input Scaling ALG233....512
Figure 295: Field Wiring ALG223....516
Figure 296: Connection Example 1 ALG233....517
Figure 297: Connection Example 2 ALG233*....517
Figure 298: IC695ALG616....518
Figure 299: Scaling Example ALG608 or ALG616....525
Figure 300: Scaling Example ALG608 or ALG616....525
Figure 301: Field Wiring, Single-Ended ALG608 or ALG616....536
Figure 302: Field Wiring, Differential Mode ALG608 or ALG616....538
Figure 303: IC694ALG390....540
Figure 304: D/A Bits versus Output Voltage....543
Figure 305: Scaling Units versus Output Voltage....543
Figure 306: Field Wiring ALG390....544
Figure 307: IC694ALG391....546
Figure 308: Derating Curve ALG391....549
Figure 309: Relationship between Output Value (%AQ) and Output Current: ALG391....550
Figure 310: Field Wiring ALG391....552
Figure 311: Wiring Example ALG391....552
Figure 312: IC694ALG392....554
Figure 313: Derating for Current Outputs: ALG392....558
Figure 314: Derating for Mixed Current & Voltage Outputs: ALG392....559
Figure 315: Scaling for Current Modes: ALG392....560
Figure 316: Scaling for Voltage Modes: ALG392....560
Figure 317: Field Wiring ALG392....563
Figure 318: IC695ALG708....565

Figure 319: Thermal Derating Curves for ALG708 at selected Voltage Levels (Current Mode only) 569
Figure 320: Channel Scaling Example 578
Figure 321: Field Wiring ALG704 & ALG708 589
Figure 322: IC695ALG808....591
Figure 323: Channel Scaling Example 601
Figure 324: Field Wiring: ALG808 610
Figure 325: Use of Hand-Held HART Calibrator 616
Figure 326: IC695ALG626....619
Figure 327: Thermal Derating ALG626 Current Mode 624
Figure 328: Scaling Example ALG626/ALG628....629
Figure 329: Scaling Example ALG626/ALG628....629
Figure 330: Field Wiring Single-Ended ALG626 or ALG628....645
Figure 331: Field Wiring Differential Mode ALG626 or ALG628 647
Figure 332: HART 2-Wire Current Loop Connection....648
Figure 333: HART Active Source Device Connection 648
Figure 334: IC695ALG728....650
Figure 335: Thermal Derating Charts ALG728 Current Mode....654
Figure 336: Scaling Example ALG728....661
Figure 337: Field Wiring ALG728 669
Figure 338: Attaching HART 2-Wire Output Device 670
Figure 339: HART Input Transmitter attached to Analog Output Channel....670
Figure 340: Ladder Logic using ALL_HART_STRUCT & DYN_HART_STRUCT 704
Figure 341: Ladder Logic Using Swap DWord & Swap Word 705
Figure 342: Ladder Logic for ACSII Pack 707
Figure 343: Ladder Logic for ACSII Unpack 711
Figure 344: IC694ALG442....714
Figure 345: Field Wiring ALG442 718
Figure 346: Input Voltage Scaling ALG442....720
Figure 347: Input Current Scaling ALG442....720
Figure 348: Output Voltage Scaling ALG442....721
Figure 349: Output Current Scaling ALG442....721
Figure 350: Ramp Mode Example ALG442....727
Figure 351: COMMREQ usage ALG442 729
Figure 352: COMMREQ Example ALG442....735
Figure 353: IC694ALG542....736
Figure 354: Field Wiring ALG542 741
Figure 355: Input Scaling Example ALG542 743
Figure 356: Output Scaling Example ALG542 744
Figure 357: Ramp Mode Example ALG542....760
Figure 358: IC695ALG600....771
Figure 359: Thermocouple / Voltage / Current Field Wiring ALG600 781
Figure 360: RTD / Resistance Field Wiring ALG600....781
Figure 361: Wiring Diagram for ALG600 781
Figure 362: Installing Cold Junction Sensor....783
Figure 363: Input Scaling Example 1: ALG600....787

Figure 364: Input Scaling Example 2: ALG600 789
Figure 365: IC695ALG306 802
Figure 366: IC695ALG412 807
Figure 367: Field Wiring ALG306, ALG312, ALG412 (Thermocouple/Voltage) 813
Figure 368: Installing Cold Junction Sensor 815
Figure 369: Input Scaling Example 1 818
Figure 370: Input Scaling Example 2 819
Figure 371: IC695ALG508 830
Figure 372: Field Wiring for RTDs ALG508 838
Figure 373: Input Scaling Example ALG508 843
Figure 374: IC694BEM320 853
Figure 375: Removable Cover BEM320 854
Figure 376: Module Size Selection (JP1) BEM320 854
Figure 377: IC694BEM321 856
Figure 378: Fuse location BEM321 857
Figure 379: IC694BEM331 858
Figure 380: Terminal Assignments BEM331 860
Figure 381: Interconnection of Devices on Genius Bus 860
Figure 382: Wiring Genius Bus Signals for Continuous Signal Path 862
Figure 383: Installing Genius Bus Terminating Resistor 863
Figure 384: IC695CMM004 864
Figure 385: Module LEDs & Ethernet Port LEDs: CMM004 865
Figure 386: RJ-45 Jack & Pinouts 867
Figure 387: Termination RS-485 4-Wire Full Duplex 868
Figure 388: Termination RS-485 2-Wire Half Duplex 868
Figure 389: Using Module Internal Jumpers & Built-in 120 Ω Resistor for Termination 868
Figure 390: Using External Jumper & Built-in 120 Ω Resistor for RS-485 4-Wire Full Duplex 869
Figure 391: Using External Jumper & Built-in 120 Ω Resistor for RS-485 2-Wire Half Duplex 869
Figure 392: IC695CMX128 870
Figure 393: IC695RMX128 873
Figure 394: IC695RMX228 873
Figure 395: IC694DNM200 877
Figure 396: DeviceNet Bus Topology 880
Figure 397: DeviceNet Connector Pinout 882
Figure 398: DeviceNet Terminating Resistor Installation 883
Figure 399: DeviceNet Wiring for End of Segment 883
Figure 400: DeviceNet Wiring for Daisy Chain 883
Figure 401: IC694DSM314 885
Figure 402: System Overview: DSM314 886
Figure 403: DSM314 Features 887
Figure 404: IC694DSM324 888
Figure 405: System Overview: DSM324 890
Figure 406: DSM324 Features 891
Figure 407: IC695PMM335 894
Figure 408: PMM335 with DIN-Rail Mounted FTB001 Terminal Blocks 895
Figure 409: IC695ECM850 897

Figure 410: ECM850 Ethernet Connections (Located Underneath Module) 900
Figure 411: IC695ETM001 902
Figure 412: IC695ETM001-Kxxx 902
Figure 413: Ethernet Features ETM001-Jx 905
Figure 414: Ethernet Features ETM001-Kxxx 907
Figure 415: EDS001 Features at a Glance 909
Figure 416: EIS001 Front View 910
Figure 417: IC695NIU001 912
Figure 418: IC695NIU001 PLUS 916
Figure 419: IC695PBM300 923
Figure 420: IC695PBS301 925
Figure 421: IC695PNC001 (-Bxxx version) 927
Figure 422: IC695PNS001-Bxxx 932
Figure 423: IC695CEP001 with IC694CEE001 Attached 943
Figure 424: Mounting Diagram CEP001 & CEE001 948
Figure 425: Attaching CEE001 to CEP001 949
Figure 426: DIN Rail Mounting Sequence 951
Figure 427: Panel Mounting Diagram: CEP001 or CEE001 952
Figure 428: Ground Connection Diagram 954
Figure 429: Power Terminal Block CEP001 956
Figure 430: CEP001 Power Terminal Wiring 957
Figure 431: Locations of Ethernet Ports CEP001 958
Figure 432: IC695GCG001 960
Figure 433: IC695PRS015 965
Figure 434: RJ-45 Pinout PRS015 977
Figure 435: Externally-Mounted Terminating Resistor 977
Figure 436: Using the Internal Terminating Resistor PRS015 978
Figure 437: Additional Depth due to Extended High-Density Terminal Blocks 982
Figure 438: Depth Comparison: High-Density vs Extended High-Density Terminal Block 982
Figure 439: 36-Terminal Box-Style Terminal Block 983
Figure 440: Wire Preparation and Insertion into Box-Style Terminal Block 984
Figure 441: 36-Terminal Spring-Style Terminal Block 985
Figure 442: Inserting Terminal Block into its Cover 987
Figure 443: Installing a High-Density Terminal Block 988
Figure 444: Removing a High-Density Terminal Block 988
Figure 445: Low-Density Terminal Block Quick Connect System 992
Figure 446: IC693ACC Terminal Block 995
Figure 447: IC693ACC329 TBQC Terminal Block 995
Figure 448: IC693ACC332 TBQC Terminal Block 997
Figure 449: IC693ACC333 TBQC Terminal Block 999
Figure 450: Connector Pin Assignments for D-Connector with 20 Terminals 1000
Figure 451: IC693ACC334 I/O Faceplate Installation 1002
Figure 452: IC693ACC334 I/O Faceplate Snaps into Place 1002
Figure 453: IC693CBL327 and IC693CBL328 Cable Construction 1003
Figure 454: Cable Construction for all other IC693CBL* Cables 1003
Figure 455: Connector Depth for IC693CBL* Cables 1005

Figure 456: D-Connector Pinout 1007
Figure 457: Allowance for Extra Depth using Straight-On Connectors 1007
Figure 458: IC693ACC337 Terminal Block Top and Front Views 1009
Figure 459: IC693ACC337 TBQC Terminal Block 1011
Figure 460: Pinout Assignments on Dual D-Connector Modules 1012
Figure 461: High-Density TBQC System Overview 1013
Figure 462: High-Density Compact Remote Terminal Base IC694RTB032 Usage 1014
Figure 463: IC694RTB032 High-Density Remote Base, 36-Terminal 1016
Figure 464: IC694TBC032 High-Density Terminal Block with Single 36-Pin D Connector 1018
Figure 465: IC694CBL* Cable Wiring Details 1020
Figure 466: Unshielded I/O Cable, Single Shield (Side View) 1036
Figure 467: Multiple Communication/High-Speed Cables, Single RF Shield (Side View) 1036
Figure 468: Cable Clamp IC697ACC736 Diagrams 1045
Figure 469: Cable Diameter Maximum with Cable Clamp 1046
Figure 470: Insulation Cover Removal 1048
Figure 471: Typical Cable Clamp Assembly installation with Expansion Backplane 1048

Section 1: Introduction

The PACSystems™ RX3i controller is a member of the PACSystems family of programmable automation controllers (PACs). Like the rest of the PACSystems family, the RX3i features a single control engine and universal programming environment to provide application portability across multiple hardware platforms.

This chapter is an overview of PACSystems RX3i products and features. The rest of the manual describes RX3i products in detail and explains installation procedures.

1.1 Revisions of this Manual

Rev	Date	Description
AG	Jan 2025	• Adds support for IC695CPS400
AF	Aug-2023	• Added the 80 W power supply as Section 4.8, Power Supply, 24 Vdc, 80 W: IC695PSD180. • Added Section 9.3.1 Isolated +24 Vdc Power for IC694ALG221. • Updated IC694MDL916's +24 Vdc Isolated load requirements in Section 4.2.
AE	Mar-2023	• Added Notes on Over/Under Range, Open Wire, and Terminal Block Removed Affecting Channel Faults and Channel Data for ALG106/112 to Section 9.1.6. • Replaced Figure 284: Input Scaling ALG223 with a more clear image.
AD	Dec-2022	Corrected Section 11.2.6 Field Wiring: IC695ALG626 and ALG628, Differential Mode.
AC	Nov-2022	Updates to support the release of CPE310-Bxxx.
AB	Jul- 2022	• Initial release of EPXCPE family • Updates to section 16.21.4 Specifications and 16.21.6 Supported I/O Module for IC695CEP001. • Updates to support the release of CPE302/305-Bxxx. • Updates to ALG600 Typical Accuracies data up to 1 KHz.
AA	Nov-2021	Updates for 7, 6, 12 Slot RX3i Backplanes for PCI-only Configurations
Z	Jun- 2021	Updates with regard to ALG442 and ALG542 hardware obsolescence.
Y	May- 2021	Updates regarding the number of supported PROFINET devices for the CPL410.

Rev	Date	Description
X	Apr-2021	• Added notes for marine Type Approval compliance in Section 2.3, Enclosures. • Updated ALG808 table values in Section 4.2, Module Load Requirement • Updated the IC695PSAx40 power output budget in Section
W	Dec-2020	• Note 52 and Note 57 for the specification of ALG223 & ALG233 modules respectively in the presence of conducted RF interference are corrected for the accuracy (+/-0.5% changed to +/- 1%). • Corrected information regarding Analog input modules ALG222, ALG223, ALG232 and ALG233
V	Nov-2020	• Added compatibility tables for IC693 modules (Sections 1.3.2 and 1.3.3) • Minor edits to enhance clarity
U	Jun-2020	• Repaired internal document links • Added ALG600 Wiring Diagram • Updated images of power supplies • Optimized branding under Emerson style guide • Fixed formatting issues in manual
T	Sep-2019	• Addition of ETM001-Kxxx • Updates concerning FW9.90
S	Jul-18	• Addition of IC695CPL410 (new CPU module) • Addition of IC695PNS101 (PNS module for RX3i Sequence of Events) • Updated power loadings for CPE330/CPE310/CPE305/CPE302, • Updated power loadings for PNC001 & PNS001 which have two hardware versions.
R	Mar-18	Added Thermal Derating for MDL340C (Figure 192).
Q	Feb-18	• Updated throughout for addition of CPE302, CPE115. • Updated Figure 99 & Figure 105 to emphasize the need for connecting DC- to Earth Ground. • Deleted incorrect Isolated Power Supply information for ALG112, ALG221, ALG223, and ALG233.
P	Dec-17	• Note in Section 1.3 concerning rackless CPUs • Notes throughout about availability of web-based tool for firmware updates for CPUs with no serial port. • Correction for ALG390 power connection (Section 10.1.3. • Notes concerning concurrent PNC001, PNS001 and GCG001 hardware updates.

Rev	Date	Description
N	Sep-17	• Added footnote #46 for ALG106 & ALG112 modules. • Updated Spec Sheets for ALG106/112/306/412/508/600/704/708/728/808 & CMM002/004. • Update customer care contact info.
M	Jul-16	Updated Chapter 11 for the Remote Hart Get Device Information COMMREQ. Additionally, there were updates to clarify the upper word (command status) of the two-word COMMREQ status word.
L	Feb-16	Added new sections to Configuration: IC695ALG808 and Module Data: IC695ALG808.
K	Dec-15	Updated *RX3i CEP Carrier* list of *Supported I/O Modules*
J	Nov-15	• New hardware replaces the existing hardware revision in production after full consumption of previous revision FAB boards (C0 rev). This is applicable for both Rx3i and 90-30 systems. • Updated Output points and voltage range
H	Sep-15	Updated module load requirements
G	Jun-15	• Added new modules IC695EDS001 and IC695EIS001. • Added HART Pass Though functionality. • Updated list of modules supported by IC695CEP001 (up to firmware rev 2.40) & IC694CEE001. • Revised sense of *Module I/O Data Ready* bit in *Module Status* for MDL250, MDL260, MDL350 & MDL660. The sense of this bit was inverted in prior documentation and is corrected in this update.
F	Dec-14	Updates for IC695CEP001 & IC694CEE001
E	Jul-14	• Added new modules IC694MDL648, IC694MDL730, IC694MDL758, IC694MDR390, IC694ALG542, IC695RMX228, IC695PMM335, IC695ECM850, IC695PNS001, IC695GCG001, IC695CEP001 & IC694CEE001. • Revised Hot Insertion and Removal table in Section 2:. • Updated content for IC694APU300 (added *Enhanced* mode) in Section 8:. • Moved IC694APU305 to Section 8:. • Updated power consumption specifications for ALG106 and ALG112. • Corrected Field Wiring diagrams for ALG222 & ALG232 • Updated Section 17:. For IC693ACC3xx terminal blocks, added new diagrams and connection info between terminals and D-connectors. Added overview of how this quick-connect system works. Also absorbed former Appendix B (32-point module terminal blocks and cables) into Section 17:

1.2 Overview

1.2.1 Features

High-speed processor and patented technology for faster throughput

- Universal backplane that supports two different backplane busses per module slot:
  - High-speed, PCI-based for fast throughput of new advanced I/O
  - Serial backplane for RX3i serial modules and easy migration of Series 90-30™ I/O
- Selection of CPUs to meet a wide range of programming and performance needs. Refer to the *PACSystems RX3i and RSTi-EP CPU Reference Manual,* GFK-2222. The RX3i product line of CPUs includes:

CPL410	AMD G-Series Quad-Core, 64 MB user memory with Linux
CPE400	AMD G-Series Quad-Core, 64 MB user memory with Field Agent
CPS400	AMD G-Series Quad-Core, 64 MB user memory Safety Controller
CPE330	Dual-core CPU with 64 MB of user memory and embedded Ethernet/PROFINET
CPE302-Axxx	CPU with 2 MB of user memory and embedded Ethernet
CPE305-Axxx	CPU with 5 MB[1] of user memory and embedded Ethernet
CPE310-Axxx	CPU with 10 MB of user memory and embedded Ethernet
CPE302-Bxxx	CPU with 2 MB of user memory and embedded Ethernet Switch
CPE305-Bxxx	CPU with 6 MB of user memory and embedded Ethernet Switch
CPE310-Bxxx	CPU with 13 MB of user memory and embedded Ethernet Switch
CPE205	CPU with 512 KB of user memory and embedded Ethernet/PROFINET
CPE210	CPU with 1.0 MB of user memory and embedded Ethernet/PROFINET
CPE215	CPU with 1.5 MB of user memory and embedded Ethernet/PROFINET
CPE220	CPU with 2.0 MB of user memory and embedded Ethernet/PROFINET

[1] The CPE305-Axxx only has 5 MB of user memory.

CPE240	CPU with 4.0 MB of user memory and embedded Ethernet/PROFINET
CPE115	CPU with 1.5 MB of user memory and embedded Ethernet/PROFINET
CPE100	CPU with 1 MB of user memory and embedded Ethernet/PROFINET
CPU310	CPU with 10 MB of user memory
CPU315	CPU with 20 MB of user memory
CPU320	CPU with 64 MB of user memory
CRU320	Redundancy CPU with 64 MB of user memory
NIU001	300 MHz Ethernet Network Interface Unit
NIU001+	1.1 GHz Ethernet Network Interface Unit

- Memory for ladder logic documentation and machine documentation in the controller to reduce downtime and improve troubleshooting
- Open communications support
- Variety of discrete, analog, and special-purpose modules
- Hot insertion in both the PCI Backplane and Serial Backplane for new and migrated I/O modules. Refer to Section 2.6.4, *Hot Insertion and Removal*
- Isolated 24 Vdc terminal for I/O modules and a grounding bar that reduces user wiring

1.2.2 Programming and Configuration

PACSystems equipment is configured and programmed using PAC Machine Edition (PME) software. PME features a common user interface across product families and drag-and-drop editing. PME also includes a built-in Web server for real-time data delivery during system operation.

- For more information about programming, instruction sets, syntax, and diagnostics, refer to the *PACSystems RX3i and RSTi-EP CPU Programmer's Reference Manual*, GFK-2950.
- For more information about configuration and CPU features, refer to the *PACSystems RX3i and RSTi-EP CPU Reference Manual*, GFK-2222.

1.2.3 PACSystems Documentation

PACSystems Manuals

PACSystems RX3i and RSTi-EP CPU Reference Manual	GFK-2222
PACSystems RX3i and RSTi-EP CPU Programmer's Reference Manual	GFK-2950
PACSystems RX3i and RSTi-EP TCP/IP Ethernet Communications User Manual	GFK-2224
PACSystems TCP/IP Ethernet Communications Station Manager User Manual	GFK-2225
C Programmer's Toolkit for PACSystems	GFK-2259
PACSystems Memory Xchange Modules User's Manual	GFK-2300
PACSystems Hot Standby CPU Redundancy User Manual	GFK-2308
PACSystems Battery and Energy Pack Manual	GFK-2741
PAC Machine Edition Logic Developer Getting Started	GFK-1918
PAC Process Systems Getting Started Guide	GFK-2487
High-Speed Counter Modules for PACSystems RX3i and Series 90-30 User's Manual	GFK-0293

PACSystems RXi, RX3i, and RSTi-EP Controller Secure Deployment Guide	GFK-2830
PACSystems HART Pass-Through User Manual	GFK-2929

RX3i Manuals

DSM324i Motion Controller for PACSystems RX3i and Series 90-30 User's Manual	GFK-2347
PACSystems RX3i PROFIBUS Modules User's Manual	GFK-2301
PACSystems RX3i Max-On Hot Standby Redundancy User's Manual	GFK-2409
PACSystems RX3i Ethernet Network Interface Unit User's Manual	GFK-2439
PACMotion Multi-Axis Motion Controller User's Manual	GFK-2448
PACSystems RX3i PROFINET I/O Controller Manual	GFK-2571
PACSystems RX3i PROFINET Scanner Manual	GFK-2737
PACSystems RX3i CEP PROFINET Scanner User Manual	GFK-2883
PACSystems RX3i IEC 61850 Ethernet Communication Module User Manual	GFK-2849
PACSystems RX3i Serial Communications Modules User's Manual	GFK-2460
PACSystems RX3i Genius Communications Gateway User Manual	GFK-2892
PACSystems RX3i DNP3 Outstation Module IC695EDS001 User's Manual	GFK-2911
PACSystems RX3i IEC 104 Server Module IC695EIS001User's Manual	GFK-2949
PACSystems RX3i IC695CPE400 / IC695CPL410 1.2GHz 64MB Rackless CPU w/Linux QSG	GFK-3053
PACSystems RX3i Sequence of Events User Manual	GFK-3050
PACSystems RX3i IC695CPS400 64MB Rackless Safety Controller QSG	GFK-3282

In addition to these manuals, datasheets and product update documents describe individual modules and product revisions. The most recent PACSystems documentation is available on the Emerson support website. A link is provided at the end of this document.

1.3 Modules for RX3i Systems

The tables in this section list the types of modules that can be included in an RX3i system:

- RX3i Modules (IC695 and IC694)

IC695 modules must be installed in a Universal (IC695CHSxxx) Backplane.

IC694 modules are compatible with the RX3i serial bus in Universal Backplanes and RX3i Serial Expansion (IC694CHSxxx) Backplanes.

Note: This document assumes the host RX3i CPU is installed in a rack, and compatible modules listed are installed in the main rack or a connected rack. However, for the CPE205, CPE210, CPE215, CPE220, CPE240, CPE100, CPE115, CPE400, CPL410, CPS400 which are rackless CPUs, those assumptions are not valid. If the host RX3i CPU is not being installed in an RX3i rack, please refer to the documentation for that particular CPU to determine compatibility.

1.3.1 RX3i Modules (IC695 and IC694)

Description	Catalog Number	Minimum RX3i CPU Version
RX3i Power Supplies		
Power Supply 120/240 Vac 125 Vdc 40 W	IC695PSA040	All
Power Supply 24 Vdc 40 W	IC695PSD040	All
Power Supply 24 Vdc 40 W Multi-purpose	IC695PSD140	All
Power Supply 120/240 Vac 125 Vdc 40 W Multi-Purpose	IC695PSA140	All
Power Supply 24 Vdc 80 W	IC695PSD180	CPE3xx-Axxx: 10.30 or later CPE3xx-Bxx: All PNS: 3.35 or Later
Power Supply 120/240 Vac 125 Vdc 30 W Serial Expansion	IC694PWR321	All
Power Supply 120/240 Vac 125 Vdc 30 W High Capacity Serial Expansion	IC694PWR330	All
Power Supply 24 Vdc 30 W High Capacity Serial Expansion	IC694PWR331	All
Discrete Input Modules		
Input Simulator Module	IC694ACC300	All
Input 120 Vac 8-Pt Isolated	IC694MDL230	All
Input 240 Vac 8-Pt Isolated	IC694MDL231	All
Input 120 Vac 16-Pt	IC694MDL240	All
Input 24 Vac 16-Pt	IC694MDL241	All
Input 120 Vac 16-Pt Isolated	IC694MDL250	3.50
Input 120 Vac 32-Pt Grouped	IC694MDL260	3.50
Input 125 Vdc 8-Pt Pos/Neg Logic	IC694MDL632	All
Input 24 Vdc 8-Pt Pos/Neg Logic	IC694MDL634	All
Input 125 Vdc 16-Pt Pos/Neg Logic	IC694MDL635	All
Input 24 Vdc 16-Pt Pos/Neg Logic	IC694MDL645	All
Input 24 Vdc 16-Pt Pos/Neg Fast	IC694MDL646	All
Input 48 Vdc 16-Pt Pos/Neg Logic, 1 ms filter	IC694MDL648	All
Input 5/12 Vdc (TTL) 32-Pt Pos/Neg	IC694MDL654	All
Input 24 Vdc 32-Pt Pos/Neg	IC694MDL655	All
Input 48 Vdc 32-Pt Pos/Neg Logic	IC694MDL658	All
Input 24 Vdc 32-Pt High-Density	IC694MDL660	2.90
Input 24 Vdc, 16-Pt, Pos Logic	IC695MDL664	6.70
Discrete Output Modules		
Output 120 Vac 0.5 A 12-Pt	IC694MDL310	All
Output 120/240 Vac 2 A 8-Pt	IC694MDL330	All
Output 120 Vac 0.5 A 16-Pt	IC694MDL340	All

Description	Catalog Number	Minimum RX3i CPU Version
Output 120/240 Vac Isolated 16-Pt	IC694MDL350	3.50
Output 120/240 Vac 2 A 5-Pt Isolated	IC694MDL390	All
Output 12/24 Vdc 2 A 8-Pt Positive Logic	IC694MDL730	All
Output 12/24 Vdc 0.5 A 8-Pt Positive Logic	IC694MDL732	All
Output 125 Vdc 1 A 6-Pt Isolated Pos/Neg	IC694MDL734	All
Output 12/24 Vdc 0.5 A 16-Pt Positive Logic	IC694MDL740	All
Output 12/24 Vdc 0.5 A 16-Pt Negative Logic	IC694MDL741	All
Output 12/24 Vdc 1 A 16-Pt Positive Logic ESCP	IC694MDL742	All
Output 5/24 Vdc (TTL) 0.5 A 32-Pt Negative Logic	IC694MDL752	All
Output 12/24 Vdc 0.5 A 32-Pt Positive Logic	IC694MDL753	All
Output 24 Vdc 32-Pt High-Density	IC694MDL754	2.90
Output 12/24 Vdc 0.5 A 32-Pt Positive Logic with ESCP per group	IC694MDL758	7.70
Output 2 A 16-Pt Positive Logic	IC695MDL765	6.70
Output 4 A 16-Pt Relay	IC694MDL916	3.81
Output Relay N.O. 4 A 8-Pt Isolated	IC694MDL930	All
Output Relay N.C. and Form C 3 A 8-Pt Isolated	IC694MDL931	All
Output Relay N.O. 2 A 16-Pt	IC694MDL940	All
Discrete Mixed Modules		
High-Speed Counter Module (Classic Mode)	IC694APU300	All
High-Speed Counter Module (Enhanced Mode)		7.13
Special I/O Processor	IC694APU305	2.90
High-Speed Counter Module, 1.5 MHz, 8 Inputs, 7 Outputs	IC695HSC304	3.81
High-Speed Counter Module, 1.5 MHz, 16 Inputs, 14 Outputs	IC695HSC308	3.81
Mixed I/O 24 Vdc Input (8-Pt) N.O. Relay Output (8-Pt)	IC694MDR390	All
Analog Input Modules		
Analog Input Module, 6 Channel Isolated Voltage/Current	IC695ALG106	5.00
Analog Input Module, 12 Channel Isolated Voltage/Current	IC695ALG112	5.00
Input Analog 4 pt Voltage	IC694ALG220	All
Input Analog 4 pt Current	IC694ALG221	All
Input Analog 16 Single-Ended/8 Differential Voltage	IC694ALG222	All
Input Analog 16 Single-Ended Current	IC694ALG223	All
Input Analog 16 Channel 16 Single-Ended/8 Differential Voltage	IC694ALG232	6.70
Input Analog 16 Channel Current	IC694ALG233	6.70
Isolated Thermocouple Input Module, 6 Channels	IC695ALG306	5.50
Isolated Thermocouple Input Module, 12 Channels	IC695ALG312	5.50
Isolated Thermocouple Input Module, 12 Channels	IC695ALG412	6.50
Isolated RTD Input Module, 8 Channels	IC695ALG508	5.50

Description	Catalog Number	Minimum RX3i CPU Version
Universal Analog Input Module, Voltage, Current, Resistance, RTD, TC	IC695ALG600	2.80
Analog Input Module, 8 Channel Non-Isolated/4 Channel Differential	IC695ALG608	3.00
Analog Input Module, 16 Channel Non-Isolated/8 Channel Differential	IC695ALG616	3.00
Analog Input Module, 16 Channel Non-Isolated/8 Channel Differential with HART Communications	IC695ALG626	3.50
Analog Input Module, 8 Channel Non-Isolated/4 Channel Differential with HART Communications	IC695ALG628	3.50
Analog Output Modules		
Output Analog Voltage 2 Channels	IC694ALG390	All
Output Analog Current 2 Channels	IC694ALG391	All
Output Analog Current/Voltage 8 Channels	IC694ALG392	All
Output Analog Current/Voltage 4 Channels	IC695ALG704	3.00
Output Analog Current/Voltage 8 Channels	IC695ALG708	3.00
Output Analog Current/Voltage 8 Channels with HART Communications	IC695ALG728	3.50
Analog Output Current/Voltage 8 Channels, Isolated	IC695ALG808	5.00
Analog Mixed I/O Modules		
Analog Module, 4-Inputs, 2-Outputs, Current/Voltage	IC694ALG442	All
Analog Module, 4-Inputs, 2-Outputs, Current/Voltage with Advanced Diagnostics	IC694ALG542	6.70
Special Purpose Modules		
I/O Link Interface Module	IC694BEM320	All
I/O Link Master Module	IC694BEM321	All
Genius Bus Controller Module	IC694BEM331	All
Serial Communications Module, 2 Ports	IC695CMM002	3.83
Serial Communications Module, 4 Ports	IC695CMM004	3.83
Memory Exchange Module	IC695CMX128	5.50
DeviceNet Master Module	IC694DNM200	3.50
DSM314 Motion Controller	IC694DSM314	All
DSM324 Motion Controller	IC694DSM324	2.80
IEC 61850 Ethernet Communication Module	IC695ECM850	8.05
RX3i DNP3 Outstation Module	IC695EDS001	8.05
RX3i Ethernet 104 Server Module	IC695EIS001	8.05
Ethernet Transmitter Module	IC695ETM001	All
Genius Communications Gateway	IC695GCG001	8.15

Description	Catalog Number	Minimum RX3i CPU Version
Serial Bus Transmitter Module	IC695LRE001	All
Ethernet Network Interface Unit Module	IC695NIU001	NA
PROFIBUS Master Module	IC695PBM300	2.90
PROFIBUS Slave Module	IC695PBS301	3.00
PACMotion Multi-Axis Motion Controller	IC695PMM335	5.60
PROFINET Controller Module	IC695PNC001	CPU315/CPU320 7.00 CPE330 8.50
PROFINET Scanner Module	IC695PNS001	CPU315/CPU320 CPE302/CPE305/CPE310 7.10 CRU320 8.00 CPE330 8.50
PROFINET Scanner Module for RX3i Sequence of Events	IC695PNS101	CPE330 9.55
Pressure Transducer Module	IC695PRS015	6.50
Redundancy Memory Xchange Module, Multi-Mode Fiber	IC695RMX128	5.70
Redundancy Memory Xchange Module, Single-Mode Fiber	IC695RMX228	5.70

1.3.2 Series 90-30 (IC693) Modules for RX3i Systems

The following table lists the 90-30 modules that are compatible with the RX3i serial bus in Universal Backplanes, RX3i Serial Expansion Backplanes, and 90-30 Expansion Backplanes.

Description	Catalog Number	*Minimum Revision Supported*	*CE Mark Approved*
Discrete Input Modules			
Series 90-30 Input Simulator Module	IC693ACC300	A	D
Series 90-30 Input 120 Vac 8-Pt Isolated	IC693MDL230	A	C
Series 90-30 Input 240 Vac 8-Pt Isolated	IC693MDL231	A	E
Series 90-30 Input 120 Vac 16-Pt	IC693MDL240	A	E
Series 90-30 Input 120 Vac 16-Pt Isolated	IC693MDL250	A	
Series 90-30 Input 120 Vac 32-Pt Grouped	IC693MDL260	A	
Series 90-30 Input 24 Vac 16-Pt	IC693MDL241	A	D
Series 90-30 Input 125 Vdc 8-Pt Pos/Neg Logic	IC693MDL632	A	D
Series 90-30 Input 24 Vdc 8-Pt Pos/Neg Logic	IC693MDL634	A	C
Series 90-30 Input 24 Vdc 16-Pt Pos/Neg Logic	IC693MDL645	A	D

Description	Catalog Number	*Minimum Revision Supported*	*CE Mark Approved*
Series 90-30 Input 24 Vdc 16-Pt Pos/Neg Fast	IC693MDL646	A	C
Series 90-30 Input 48 Vdc 16-Pt Pos/Neg Fast	IC693MDL648	A	B
Series 90-30 Input 5/12 Vdc (TTL) 32-Pt Pos/Neg	IC693MDL654	A	E
Series 90-30 Input 24 Vdc 32-Pt Pos/Neg	IC693MDL655	A	E
Series 90-30 Input High-Density 24 Vdc 32-Pt	IC693MDL660	A	
Series 90-30 Output 120 Vac 0.5 A 12-Pt	IC693MDL310	A	D
Series 90-30 Output 120/240 Vac 2 A 8-Pt	IC693MDL330	A	F
Series 90-30 Output 120 Vac 0.5 A 16-Pt	IC693MDL340	A	D
Series 90-30 Output 120/240 Vac Isolated 16-Pt	IC693MDL350	A	
Series 90-30 Output 120/240 Vac 2 A 5-Pt Isolated	IC693MDL390	A	E
Series 90-30 Output 12/24 Vdc 2 A 8-Pt Positive Logic	IC693MDL730	A	E
Series 90-30 Output 12/24 Vdc 2 A 8-Pt Negative Logic	IC693MDL731	A	E
Series 90-30 Output 12/24 Vdc 0.5 A 8-Pt Positive Logic	IC693MDL732	A	C
Series 90-30 Output 12/24 Vdc 0.5 A 8-Pt Negative Logic	IC693MDL733	A	C
Discrete Output Modules			
Series 90-30 Output 125 Vdc 1 A 6-Pt Isolated Pos/Neg	IC693MDL734	A	D
Series 90-30 Output 12/24 Vdc 0.5 A 16-Pt Positive Logic	IC693MDL740	A	E
Series 90-30 Output 12/24 Vdc 0.5 A 16-Pt Negative Logic	IC693MDL741	A	E
Series 90-30 Output 12/24 Vdc 1 A 16-Pt Positive Logic ESCP	IC693MDL742	A	D
Series 90-30 Output 48 Vdc 0.5 A 8-Pt Positive Logic	IC693MDL748	A	B
Series 90-30 Output 5/24 Vdc (TTL) 0.5 A 32-Pt Negative Logic	IC693MDL752	A	D
Series 90-30 Output 12/24 Vdc 0.5 A 32-Pt Positive Logic	IC693MDL753	A	D
Series 90-30 Output High-Density 24 Vdc 32-Pt	IC693MDL754	A	
Series 90-30 Solenoid Out 11 Pt/24 Vdc Out 5-Pt Positive Logic	IC693MDL760	A	B
Series 90-30 Output Relay N.O. 4 A 8-Pt Isolated	IC693MDL930	A	D
Series 90-30 Output Relay N.C. and Form C 3 A 8-Pt Isolated	IC693MDL931	A	D
Series 90-30 Output Relay N.O. 2 A 16-Pt	IC693MDL940	A	D
Discrete Mixed Modules			
Series 90-30 High-Speed Counter Module	IC693APU300	D	H
Series 90-30 Special I/O Processor	IC693APU305	C	
Series 90-30 Mixed I/O 8-Pt 120 Vac In/8-Pt Relay Out	IC693MAR590	A	C
Series 90-30 Mixed I/O 8-Pt 24 Vdc In/8-Pt Relay Out	IC693MDR390	A	C
Analog Input Modules			
Series 90-30 Input Analog 4-Channel Voltage	IC693ALG220	A	G and H
Series 90-30 Input Analog 4-Channel Current	IC693ALG221	A	G and H
Series 90-30 Input Analog 16 Single-Ended/8 Differential Voltage	IC693ALG222	A	C and D

Description	Catalog Number	*Minimum Revision Supported*	*CE Mark Approved*
Series 90-30 Input Analog 16 Single-Ended/8 Differential Current	IC693ALG223	A	C
Analog Output Modules			
Series 90-30 Output Analog 2-Channel Voltage	IC693ALG390	A	F
Series 90-30 Output Analog 2-Channel Current	IC693ALG391	A	E
Series 90-30 Output Analog Current/Voltage 8-Channel	IC693ALG392	A	B
Analog Mixed I/O Modules			
Series 90-30 Analog Current/Voltage 4-Input/2-Output	IC693ALG442	B	B
Communication Modules			
Series 90-30 I/O Link Module (Master)	IC693BEM321	C	F
Series 90-30 Genius Bus Controller	IC693BEM331	K	
Series 90-30 FIP Bus Controller	IC693BEM341		
Special Purpose Modules			
Series 90-30 I/O Link Interface Module	IC693BEM320		
Series 90-30 I/O Link Master Module	IC693BEM321		
Series 90-30 DeviceNet Master Module	IC693DNM200	AA	
Series 90-30 DeviceNet Slave Module	IC693DNS301	AA	
Series 90-30 DSM314 Motion Controller	IC693DSM314	AC	AA
Series 90-30 DSM324i Motion Controller	IC603DSM324		
Series 90-30 Temperature Controller Module	IC693TCM302	*	
Series 90-30 Temperature Controller Module Extended Range	IC693TCM303	*	
Series 90-30 Power Transducer Module	IC693PTM100	A	
Series 90-30 Power Transducer Module	IC693PTM101	A	

1.3.3 Series 90-30 Modules that Cannot Be Used in an RX3i System

The Series 90-30 modules listed in the following table cannot be included in a Universal Backplane or any Expansion or Remote Backplane in an RX3i system. For information about whether another company's Series 90-30-compatible module may be suitable for PACSystems RX3i applications, please contact the manufacturer of Module. That includes Series 90-30 modules that have catalog numbers beginning with HE693.

Description	Catalog Number
CIMPLICITY 90-ADS 9030 Module	IC693ADC311
CIMPLICITY 90-ADS 9030 System	IC693ADS301

Description	Catalog Number
Axis Position Module (1-Axis)	IC693APU301
Axis Position Module (2-Axis)	IC693APU302
Series 90-30 SDS Bus Interface	IC693BEM310
Remote FIP Interface Module	IC693BEM330
FIP Remote I/O 2.5 MHz	IC693BEM332
Remote FIP Interface	IC693BEM333
Genius Bus Controller	IC693BEM334
FIP Remote I/O 2.5 MHz	IC693BEM335
Ethernet Network Interface Unit	IC693BEM350
Cscan Interface Module	IC693CDC200
Genius Communications Module	IC693CMM301
Enhanced Genius Communications Module	IC693CMM302
Alspa N80 Communications Module	IC693CMM304
Alspa Enhanced N80 Communications Module	IC693CMM305
Communication Control Module	IC693CMM311
Ethernet Interface Module 3.10	IC693CMM321
Digital Servo Module (2-Axis)	IC693DSM302
Digital Valve Driver Module	IC693DVM300
Power Mate “J “Interface Module	IC693MCM001
Power Mate “J” Interface 2 Axis	IC693MCM002
PM-J 1-Axis International Only	IC693MCS001
PM-J 2-Axis International Only	IC693MCS001
Input 120/240 Vac 8-Pt Isolated	IC693MDL232
Input 24 Vdc 8-Pt Pos Logic	IC693MDL630
Input 24 Vdc 8-Pt Neg Logic	IC693MDL631
Input 24 Vdc 8-Pt Neg Logic	IC693MDL633
Input 24 Vdc 16-Pt Pos Logic	IC693MDL640
Input 24 Vdc 16-Pt Neg Logic	IC693MDL641
Input 24 Vdc 16-Pt Pos Logic Fast (1 ms)	IC693MDL643
Input 24 Vdc 16-Pt Neg Logic Fast (1 ms)	IC693MDL644
Input 24 Vdc 32-Pt Pos/Neg	IC693MDL652
Input 24 Vdc 32-Pt Pos/Neg Fast	IC693MDL653
Output 12/24 Vdc 0.3 A 32-Pt Neg	IC693MDL750
Output 12/24 Vdc 0.3 A 32-Pt Pos	IC693MDL751
PROFIBUS-DP Master	IC693PBM200
PROFIBUS-DP Slave	IC693PBS201
Programmable Coprocessor W/Epr	IC693PCM30
Programmable Coprocessor Module	IC693PCM300
Programmable Coprocessor Module (64 k)	IC693PCM301
Programmable Coprocessor Module (640 k)	IC693PCM311

Description	Catalog Number
Clamp Position Module	IC693PMC801
Injection Position Module	IC693PMI800

1.4 Backplanes and Power Supplies

1.4.1 RX3i Universal Backplane

The RX3i system must include at least one Universal Backplane: it accommodates the RX3i CPU. Three sizes of Universal Backplane are available: 7-slot IC695CHS007, 12-slot IC695CHS012 (Figure 1), and 16-slot (IC695CHS016). These three sizes are available in two variations: dual-bus and PCI-only.

Dual-Bus Backplane

With its dual-purpose backplane, the RX3i Universal Backplane supports both PCI-based backplane (IC695) and serial backplane (IC693 and IC694) I/O and option modules. It also supports Series 90-30 I/O and option modules.

PCI-Only Backplane

The PACSystems RX3i 7-slot, 12-slot, and 16-slot Universal Backplanes are also available as PCI-exclusive variations (IC695CHS007PCIONLY, IC695CHS012PCIONLY, IC695CHS016PCIONLY). The PCI-exclusive version of this backplane supports only IC695 modules. Visually, customers can identify the difference between the two models by the absence of the Serial Bus connector, which is located next to the PCI Bus connector on the dual-bus backplane.

Figure 1: 12-Slot Universal Backplane IC695CHS012

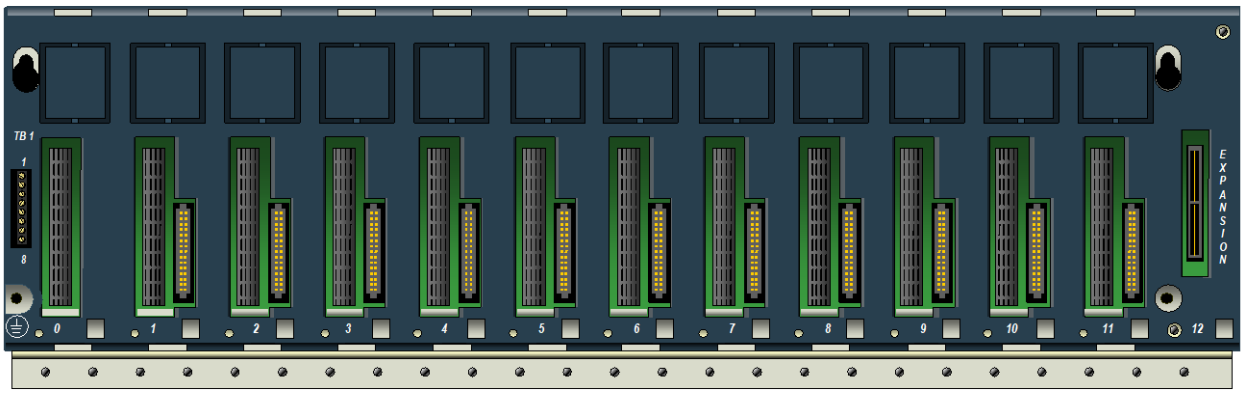

1.4.3 Expansion (12-slot and 16-slot Universal Backplanes Only)

Figure 2: LRE001

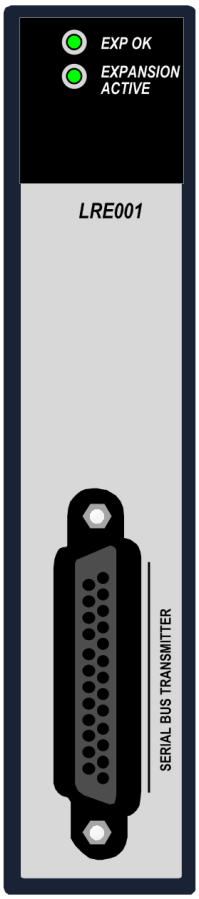

Whenever an application requires more modules than the selected Universal Backplane can accommodate (whenever some modules must be installed in another location) an RX3i Serial Bus Transmitter Module, IC695LRE001 (Figure 2), must be installed in the last slot of the Universal Backplane. Note that only 12-slot and 16-slot Universal Backplanes accommodate the LRE001.

The Bus Transmitter module (LRE001) is connected to the first Expansion or Remote backplane via a cable. Subsequent racks are daisy-chained together using cables (see Figure 4 through Figure 6).

The D-connector (right side, Figure 3) is used to connect the Rx3i Serial Expansion backplane to the LRE001.

Remote Backplanes may also be connected to the RX3i system in this manner.

Figure 3: 5-Slot RX3i Serial Expansion Backplane IC694CHS398

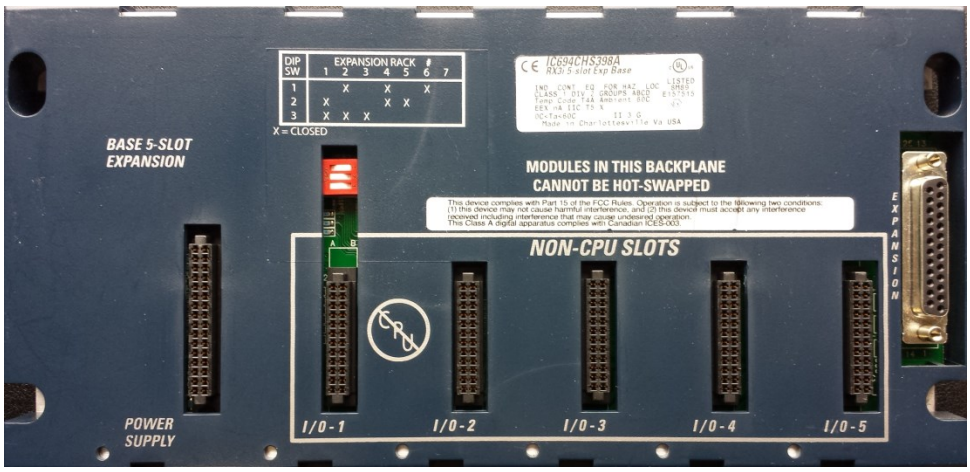

Use of Expansion and Remote Backplanes is summarized on the following pages.
For more information about the Serial Bus Transmitter module and cables, refer to.

1.4.4 Backplanes Available for the RX3i System

Universal and Expansion Backplanes that are compatible with RX3i systems are listed below. Refer to Chapter 3 of this manual for descriptions and specifications of the RX3i Backplanes. For information about Series 90-30 Expansion Backplanes, refer to the *Series 90-30 I/O Modules Specifications Manual*, GFK-0898.

Backplanes		
RX3i 16-Slot Universal Backplane	IC695CHS016	IC695CHS016PCIOnly
RX3i 12-Slot Universal Backplane	IC695CHS012	IC695CHS012PCIOnly
RX3i 7-Slot Universal Backplane	IC695CHS007	IC695CHS007PCIOnly
RX3i 10-Slot Serial Expansion Backplane	IC694CHS392	
RX3i 5-Slot Serial Expansion Backplane	IC694CHS398	
Series 90-30 10-Slot Expansion Backplane	IC693CHS392	
Series 90-30 5-Slot Expansion Backplane	IC693CHS398	
Series 90-30 10-Slot Remote Expansion Backplane	IC693CHS393	
Series 90-30 5-Slot Remote Expansion Backplane	IC693CHS399	
Backplanes		
RX3i 16-Slot Universal Backplane	IC695CHS016	IC695CHS016PCIOnly
RX3i 12-Slot Universal Backplane	IC695CHS012	IC695CHS012PCIOnly
RX3i 7-Slot Universal Backplane	IC695CHS007	IC695CHS007PCIOnly
RX3i 10-Slot Serial Expansion Backplane	IC694CHS392	
RX3i 5-Slot Serial Expansion Backplane	IC694CHS398	
Series 90-30 10-Slot Expansion Backplane	IC693CHS392	
Series 90-30 5-Slot Expansion Backplane	IC693CHS398	
Series 90-30 10-Slot Remote Expansion Backplane	IC693CHS393	
Series 90-30 5-Slot Remote Expansion Backplane	IC693CHS399	

1.4.5 Power Supplies for RX3i Systems

Power Supplies for Universal and Serial Expansion Backplanes are listed below. Refer to Chapter 4 for descriptions and specifications of the RX3i Power Supplies. For information about Series 90-30 Power Supplies, refer to the GFK-0898, *Series 90-30 I/O Modules Specifications Manual*.

Description	Catalog Number	Installed in Universal Backplane	Installed in Serial Expansion Backplane
Power Supplies			
RX3i Power Supply, 120/240 Vac, 125 Vdc, 40 W	IC695PSA040 IC695PSA140	√	
RX3i Power Supplies, 24 Vdc, 40 W	IC695PSD040 IC695PSD140	√	
RX3i Power Supply, 24 VDC, 80 W	IC695PSD180	√	
RX3i Serial Expansion Power Supply, 120/240 Vac, 125 Vdc	IC694PWR321		√
RX3i Serial Expansion Power Supply, 120/240 Vac, 125 Vdc, High Capacity	IC694PWR330		√
RX3i Serial Expansion Power Supply, 24 Vdc, High Capacity	IC694PWR331		√
Series 90-30 Power Supply for Expansion Backplane, 120/240 Vac, 125 Vdc	IC693PWR321		√
Series 90-30 Power Supply for Expansion Backplane, 120/240 Vac, 125 Vdc, High Capacity	IC693PWR330		√
Series 90-30 Power Supply for Expansion Backplane, 24 Vdc, High Capacity	IC693PWR331		√

1.5 Expansion Systems

The PACSystems RX3i can include a combination of up to seven Serial Expansion and/or Remote Backplanes. The Expansion Backplanes can be any of the RX3i or Series 90-30 models listed earlier. The Remote Backplanes can be any of the Series 90-30 Remote Backplanes listed in the GEK-0898, *Series 90-30 I/O Module Specifications Manual*.

- If the system includes only Expansion Backplanes, the total distance from the CPU to the last backplane cannot be more than 15 meters (50 feet)
- If the system includes any Remote Backplanes, the total distance from the CPU to the last backplane cannot be more than 213 meters (700 feet).

Remote Backplanes provide the same functionality as Expansion Backplanes over a much greater distance. Remote Backplanes have extra isolation circuitry that lessens the effect of unbalanced ground conditions that can occur when backplanes are located long distances from each other and do not share the same ground system. Communications between the CPU and a Remote Backplane may take slightly longer than communications between the CPU and an Expansion Backplane. This delay is usually small compared to the total CPU scan time.

1.5.1 Expansion System with One Expansion or Remote Backplane

An Expansion system can consist of a Universal Backplane with just one Expansion or Remote Backplane.

This example includes one Universal Backplane IC695CHS012 and one Expansion Backplane, IC694CHS392. Each Backplane in this example has a DC Power Supply. Together, they accommodate 19 discrete, analog, and special-function modules.

These backplanes are located 15 m (50 ft) apart. They are connected via an Expansion Cable IC693CBL302, which has a built-in terminating resistor.

If it were necessary to locate the second backplane more than 15 m (50 ft) from the Universal Backplane, a Series 90-30 Remote Backplane could be used with a custom-length cable and external terminating resistor.

Figure 4: RX3i System using One Universal Backplane and One Expansion Backplane

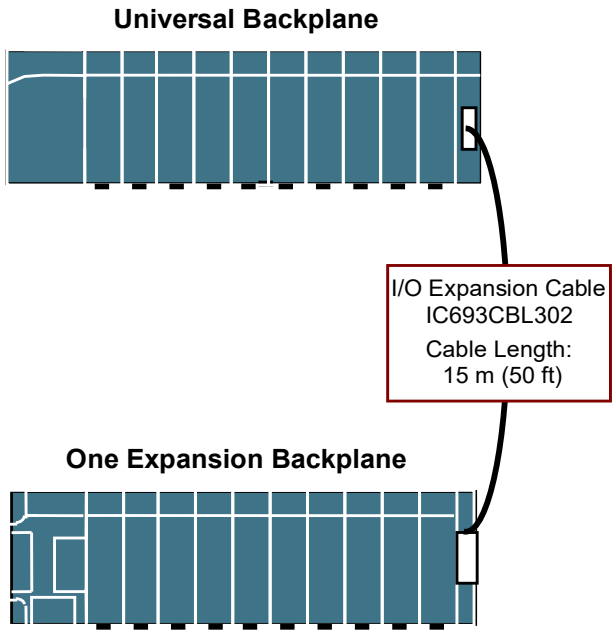

1.5.3 Using Multiple Expansion and Remote Backplanes

The next two example systems are similar to each other except for the distance between the backplanes. The example on the left includes two RX3i Expansion Backplanes and a Series 90-30 Expansion Backplane. The Expansion Backplanes can be any combination of RX3i (IC694) and Series 90-30 (IC693) Expansion Backplanes. I/O modules in the system can be any combination of RX3i and Series 90-30 modules.

In the example on the right, two of the backplanes must be installed beyond the 15 m (50 ft) limit of an Expansion system. Two Series 90-30 Remote Backplanes are used in those locations. All other features of the two example systems are the same, including their I/O modules.

Figure 5: RX3i System using Multiple Expansion Backplanes

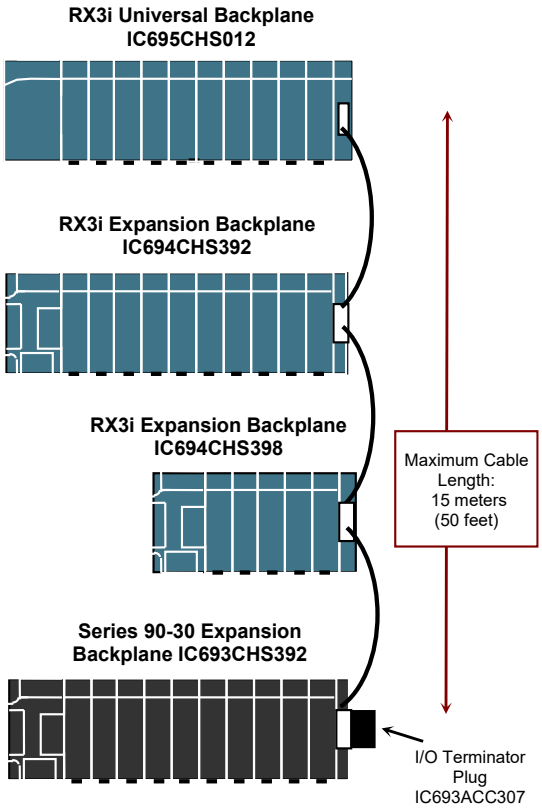

Figure 6: Rx3i System using Expansion and Remote Backplanes

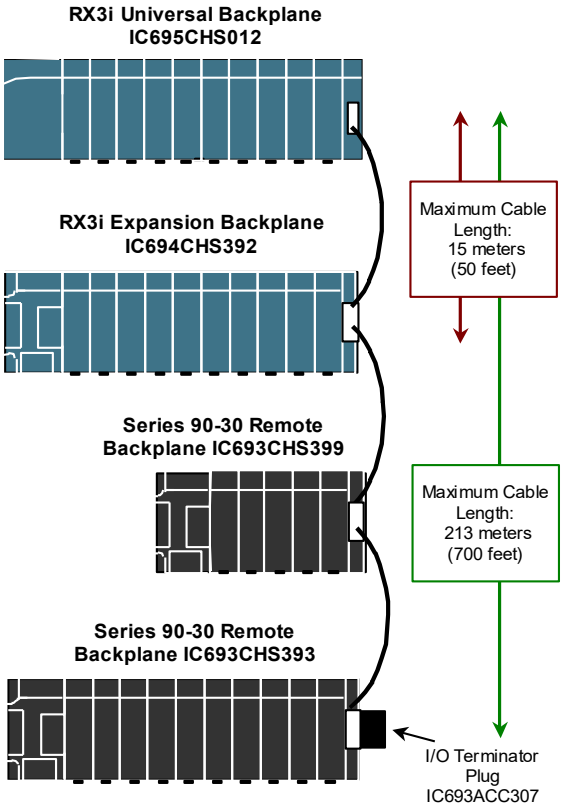

Section 2: Installation

This chapter provides general instructions for installing PACSystems RX3i equipment.

- Pre-Installation Check
- System Layout Guidelines
- Enclosures
- System Wiring
- System Grounding
- System Installation

For additional information about system installation, refer to the following:

- Section 3: Backplanes, for backplane dimension diagrams
- Section 4: Power Supplies, for power supply specifications and wiring diagrams
- Sections 5-16 for module wiring diagrams and specifications
- Section 17: Terminal Blocks and Interconnect Cables, for information about terminal blocks for some higher-density modules, the Terminal Block Quick Connect System (TBQC) and interconnect cables.
- Appendix A: for general standards information
- Appendix B: for information about calculating heat dissipation
- Appendix C: for information about the Cable Clamping Assembly

2.1 Pre-Installation Check

Upon receiving your RX3i equipment, carefully inspect all shipping containers for damage. If any part of the system is damaged, notify the carrier immediately. The damaged shipping container should be saved as evidence for inspection by the carrier.

As the consignee, it is your responsibility to register a claim with the carrier for damage incurred during shipment. However, we will fully cooperate with you, should such action be necessary.

After unpacking the RX3i equipment, **record all serial numbers**. Serial numbers are required if you should need to contact Customer Care during the warranty period. All shipping containers and all packing material should be saved should it be necessary to transport or ship any part of the system.

Verify that all components of the system have been received and that they agree with your order. If the system received does not agree with your order, contact Customer Care.

If you need technical help, contact Technical Support. For phone numbers and email addresses, refer to *Contact Information*.

2.2 System Layout Guidelines

A good layout helps minimize the chance of electrical shock to personnel working on the system. It lets maintenance technicians easily access the unit to make measurements, load software, check indicator lights, remove and replace modules, etc. It also makes it easier to trace wiring and locate components while troubleshooting. Also, a proper system layout promotes good heat dissipation and helps eliminate electrical noise from the system. Excess heat and noise are two major causes of electronic component failure.

- Locate RX3i equipment away from other components that generate a lot of heat, such as transformers, power supplies, or power resistors.
- Locate RX3i equipment away from components that generate electrical noise such as relays and contacts.
- Locate RX3i equipment away from high-voltage components and wiring, such as circuit breakers and fusible disconnects, transformers, and motor wiring.
- Locate equipment at a convenient level that allows technicians reasonable access for maintaining the system.
- Route sensitive input wires away from electrically-noisy wires such as discrete output and AC wiring. This can be facilitated by grouping I/O modules to keep output modules separated from sensitive input modules.
- Clearance space of 10 cm (4 in) on all four sides of each RX3i backplane for ventilation/cooling is required.
- RX3i backplanes are designed to be mounted horizontally due to thermal considerations. Other mounting orientations may affect system performance, reliability, and agency approvals, and are therefore not recommended.
- Use shielded cable connections with the shield grounded at one end (at source) for all analog modules, including RTD and Thermocouple modules.

Figure 7: System Layout Guidelines

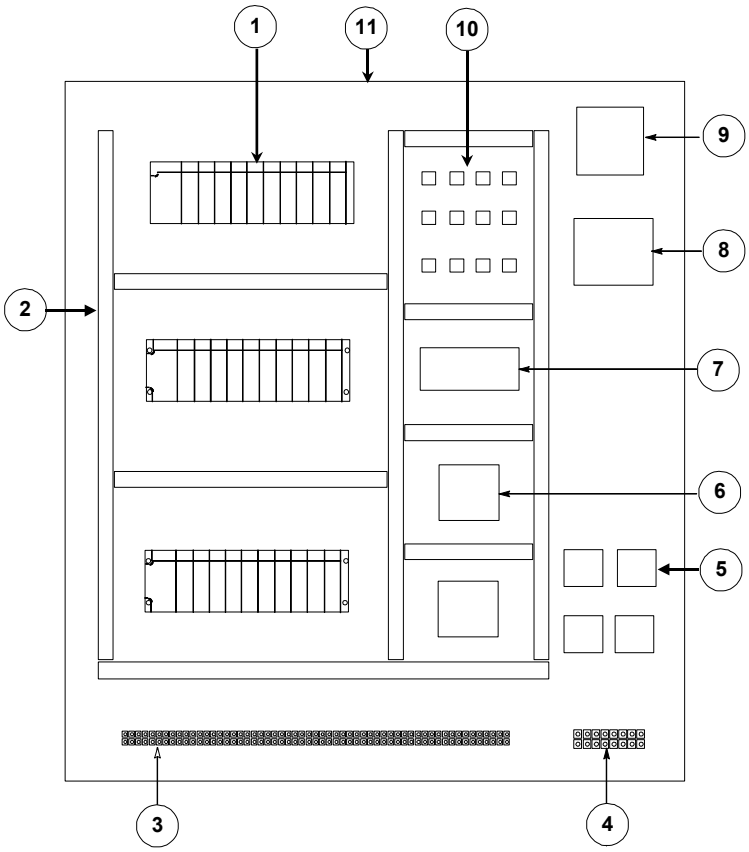

1. RX3i
2. Wireway (Wire Duct)
3. Field device connection terminal block
4. Motor connection terminal block
5. Motor starters
6. Circuit board
7. Power supply
8. Control transformer
9. Fusible disconnect or circuit breaker
10. Control relays
11. Protected enclosure

2.3 Enclosures

The RX3i system and its components are considered open equipment [having live electrical parts that may be accessible to users] and must be installed in a protective enclosure or incorporated into other assemblies manufactured to provide safety. At a minimum, the enclosure or assemblies shall provide a degree of protection against solid objects up to 12 mm (e.g., fingers). This equates to a NEMA/UL Type 1 enclosure or an IP20 rating (IEC60529) providing at least a pollution degree 2 environment.

When an RX3i system is installed into an area designated as a Hazardous Area, then the enclosure must be one that is only accessible by use of a tool. Refer to Appendix A for reference to specific product certifications, types of Hazardous Area approvals, Hazardous Area warnings, and additional enclosure requirements concerning ATEX. The enclosure must be able to adequately dissipate the heat generated by all of the components mounted inside so that no components overheat. Heat dissipation is also a factor in determining the need for enclosure cooling options such as fans and air conditioning. A minimum space of at least 102 mm (4 in) is required on all sides of the RX3i backplane for cooling. Additional space may be required, depending on the amount of heat generated by the equipment during operation, or on other requirements such as minimum bend radius for system cabling. *Appendix B* explains how to calculate heat dissipation for RX3i modules and field devices in an enclosure.

2.3.1 RX3i Universal Backplane Dimensions and Spacing

Table 2-1: Backplane Dimensional Details

CAT Number	Dimensions – Inches (mm)		
	Length (L)	Width (W)	Height (H)
IC695CHS007	10.414 +/- 0.014 (264.515 +/- 0.356)	5.55 Max, 5.6 Min (140.97 Max, 142.24 Min)	0.851 +/- 0.010 (21.615 +/- 0.254)
IC695CHS012	18.191 +/- 0.014 (462.051 +/- 0.356)	5.55 Max, 5.6 01 Min (140.97 Max, 142.26 Min)	0.851 +/- 0.010 (21.615 +/- 0.254)
IC695CHS016	23.791 +/- 0.014 (604.291 +/- 0.356)	5.55 Max, 5.6 01 Min (140.97 Max, 142.26 Min)	0.851 +/- 0.010 (21.615 +/- 0.254)

Figure 8: RX3i Universal Backplane Dimensions and Spacing

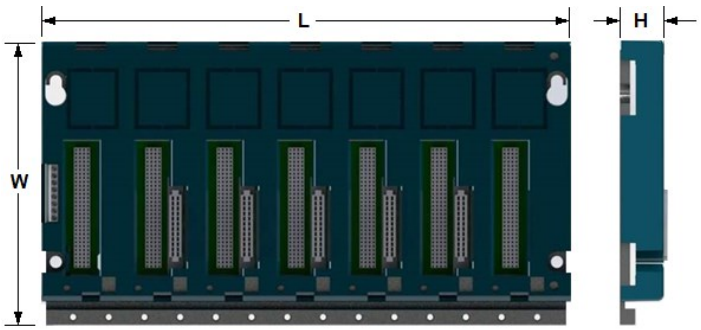

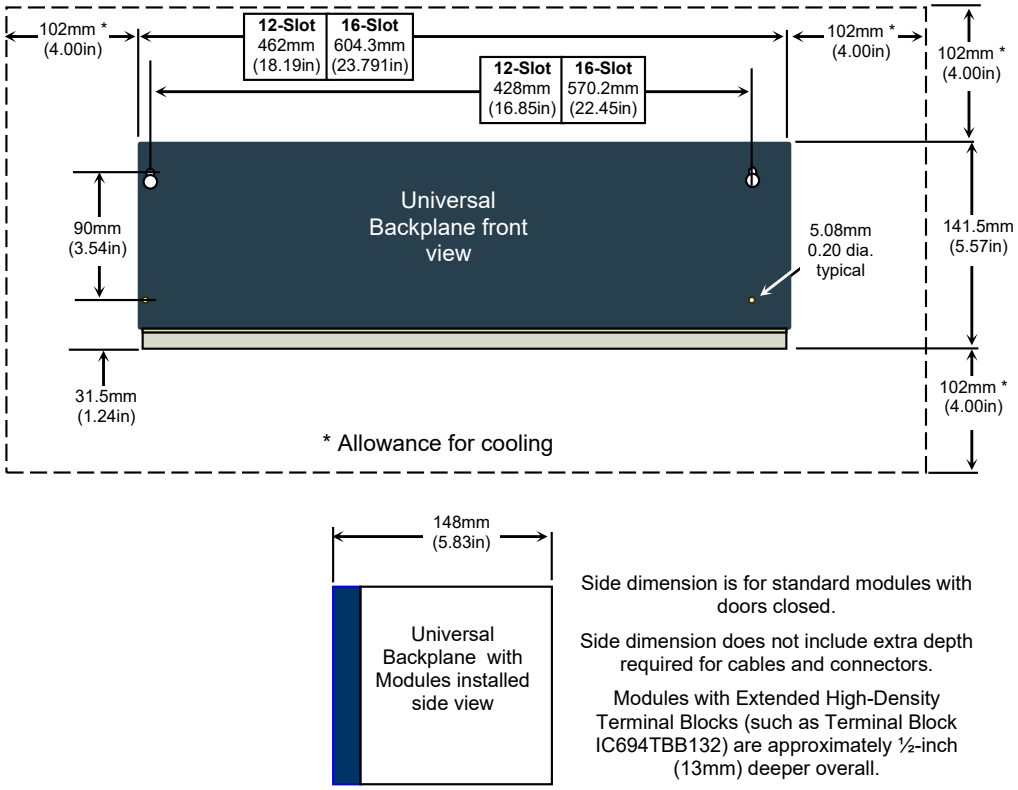

The mounting holes for the 12-slot RX3i Universal Backplane match the 10-slot Series 90-30 Backplane exactly, for easy upgrades.

Backplanes must be mounted horizontally, as represented above, to meet product performance and reliability specifications by providing adequate airflow around Modules. Other mounting orientations may affect system performance, reliability, and agency approvals, and are therefore not recommended.

Figure 9: Vertical Mounting Not Recommended

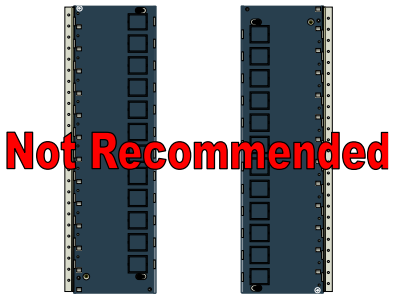

2.3.2 RX3i Serial Expansion Backplane Dimensions and Spacing

Each backplane has standard attachment flanges for mounting on an electrical panel.

Figure 10: RX3i Serial Expansion Backplane Dimensions and Spacing

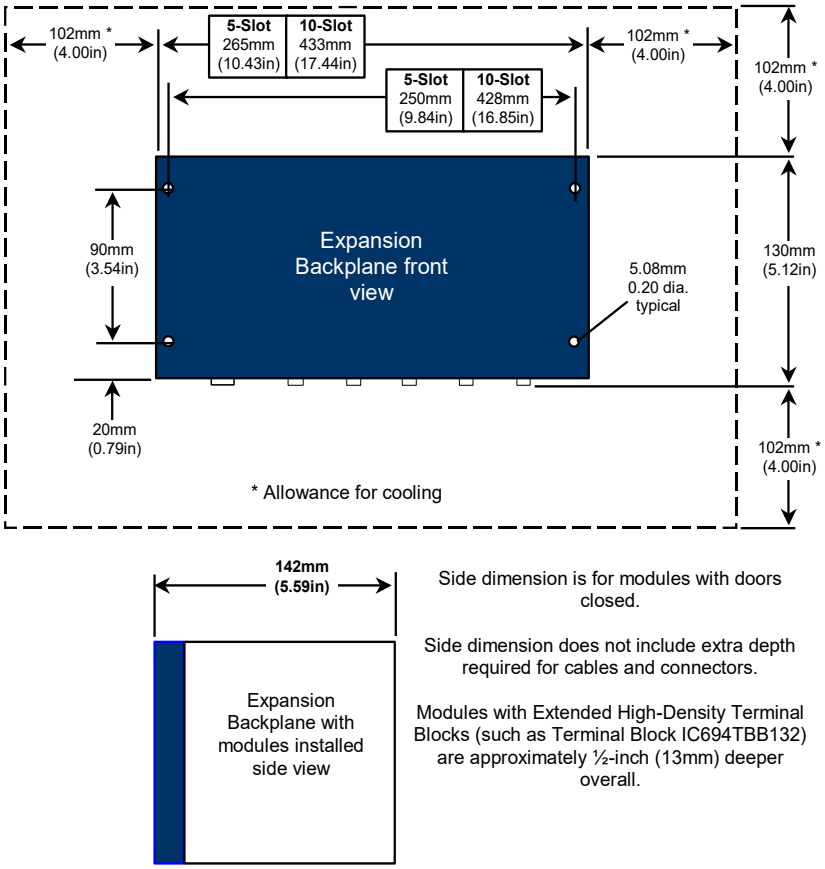

2.4 System Wiring

Adhere to the following information to avoid possible misrouting of wiring to I/O modules:

- Label all wires to and from I/O devices. Record circuit identification numbers or other pertinent data on the inserts that go into the faceplate door of Module.
- Wires should be dressed so that each field I/O connector is fixed relative to its respective module.

⚠ WARNING

In addition to the information provided here, always follow all wiring and safety codes that apply to your area or your type of equipment. For example, in the United States, most areas have adopted the National Electrical Code standard and specify that all wiring

conforms to its requirements. In other countries, different codes will apply. For maximum safety to personnel and property, you must follow these codes. Failure to do so can lead to personal injury or death, property damage or destruction, or both.

2.4.1 Color Coding Wires

These color codes are commonly used in industrial equipment manufactured in the United States. Where they differ from codes that apply to your area or your type of equipment, follow your applicable codes instead. Besides satisfying code requirements, wire color coding makes testing and troubleshooting safer, faster, and easier.

- Green or green with stripe- Ground
- Black - Primary AC
- Red - Secondary AC
- Blue - DC
- White - Common or neutral
- Yellow - Secondary power source not controlled by the main disconnect. Alerts maintenance personnel that there may be power present (from an external source) even if the equipment is disconnected from its main power source.

2.4.3 Wire Routing

To reduce noise-coupling among PLC wires, electrically-noisy wiring such as AC power wiring and discrete output module wiring should be separated from low-level signal wirings such as DC and analog input module wiring or communications cables. Where practical, group separately the following types of wiring:

- **AC power wiring** includes the AC input to the PLC power supply, as well as other AC devices in the control cabinet.
- **Analog Input or Output Module wiring** should be shielded to further reduce noise coupling.
- **Discrete Output Module wiring** often includes switch-inductive loads that produce noise spikes when switched off.
- **DC Input Module wiring,** although suppressed internally, are low-level inputs that should be further protected against noise coupling by observing these wiring practices.
- **Communications Cables** are noise-producing wiring cables from which wiring such as Genius bus or serial cables should be kept away.

Where AC or Output wiring bundles must pass near noise-sensitive signal wiring bundles, avoid running them beside each other. If they have to cross, route them at a right angle to minimize coupling between them.

Grouping of Similar Modules to Keep Wires Segregated

If practical, grouping similar modules together on the backplanes can help keep wiring segregated. For example, one backplane could contain AC modules only, while another could contain DC modules only, with further grouping by input and output types.

2.5 System Grounding

All components of a control system and the devices it is controlling must be properly grounded. This is particularly important for the following reasons:

- A low-resistance path from all parts of a system to earth minimizes exposure to shock in the event of short circuits or equipment malfunction.
- The RX3i system requires proper grounding for correct operation.
- All backplanes grouped together in the PLC system must have a common ground connection. This is especially important for backplanes that are not mounted in the same control cabinet.

⚠ WARNING

In addition to observing the grounding procedures described here, it is important to follow local grounding codes. In the United States, most areas have adopted the National Electrical Code standard and specify that all wiring conforms to its requirements. In other countries, different codes apply. For maximum safety to personnel and property, follow these codes. Failure to do so can mean injury or death to personnel, damage to property, or both.

In addition to observing the system grounding procedures, periodic inspections of the ground connections should be performed to ensure that the system remains properly grounded.

- The PLC equipment, other control equipment, and the machine should be interconnected to maintain a common earth ground reference, also called the machine chassis ground.

Figure 11: System Grounding

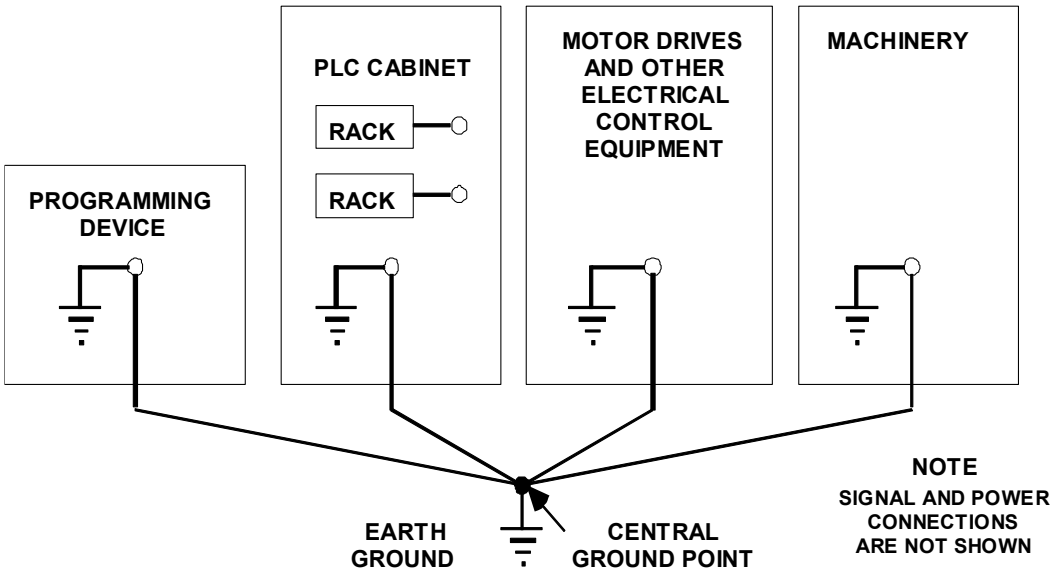

2.5.1 Ground Conductors

Ground conductors should be connected in a tree fashion with branches routed to a central earth ground point, as shown on the previous page. This ensures that no ground conductor carries current from any other branch.

A low inductance path from all parts of a system to earth minimizes emissions and increases immunity to electrical interferences. Ground conductors should be as short and as large in size as possible. Braided straps (maximum 10:1 length to width ratio recommended) or ground cables (typically green insulation with a yellow tracer - AWG #12 (3.3 mm^2) or larger) can be used to minimize resistance. Conductors must always be large enough to carry the maximum short circuit current of the path being considered.

2.5.2 Backplane Safety and EMC Reference Grounding

The metal back of the backplane must be grounded using a separate conductor; the backplane mounting screws alone do not provide an adequate ground connection. At a minimum, use AWG #12 (3.3 mm^2) wire with a ring terminal and star lock-washer. Connect the other end of this ground wire to a tapped hole in the mounting panel using a machine screw, star lock washer, and flat washer. Alternately, if the panel has a ground stud, use a nut and star lock washer for each wire on the ground stud to ensure adequate grounding. Where connections are made to a painted panel, the paint should be removed so clean, bare metal is exposed at the connection point. Terminals and hardware used should be rated to work with the aluminum backplane material.

Figure 12: Ground Strap Installation

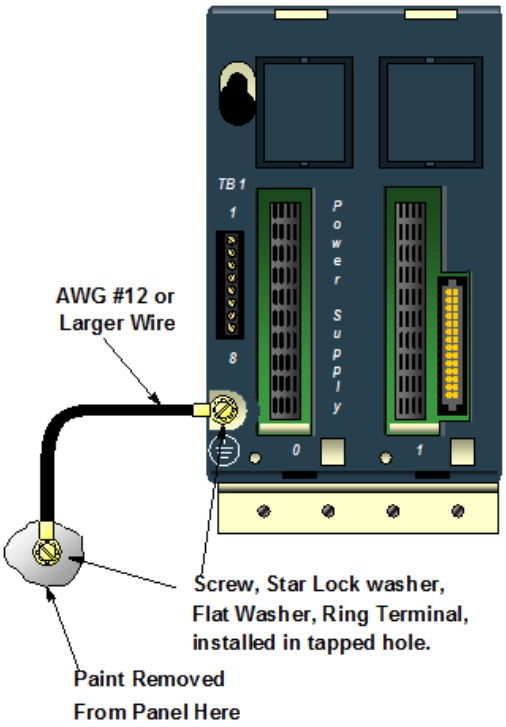

⚠ WARNING

All backplanes must be grounded to minimize electrical shock hazards. Failure to do so can result in severe personal injury.

All backplanes grouped together in the PLC system must have a common ground connection. This is especially important for backplanes that are not mounted in the same control cabinet.

2.5.3 Power Supply Grounding

Refer to the Section 4.1.1,

Power Supply Field–.

.

2.5.4 Programmer Grounding

For proper operation, the computer (programmer) running the PLC software must have a ground connection in common with the CPU. Normally, this common ground connection is provided by connecting the power cord of the programming device to the same power source (with the same ground reference point) as the backplane. If the programmer ground is at a different potential than the PLC ground, a shock hazard could exist. Also, damage to the ports could occur when the programmer serial cable is connected between the two.

2.5.5 Shield Grounding

In general, the aluminum PLC backplane is used for module shield grounding. On some modules, shield connections to the user terminal connector on Module are routed to the backplane through the backplane connector of Module. Other modules, such as the DSM314 require a separate shield ground, as displayed in Module descriptions in this manual.

For modules installed in a Universal Backplane, shield grounds can be connected to the Grounding Bar at the bottom of the Backplane using size M3 screws. The recommended torque is 0.45 Nm (4 in-lb.) maximum.

Figure 13: Grounding Bar on RX3i Universal Backplane

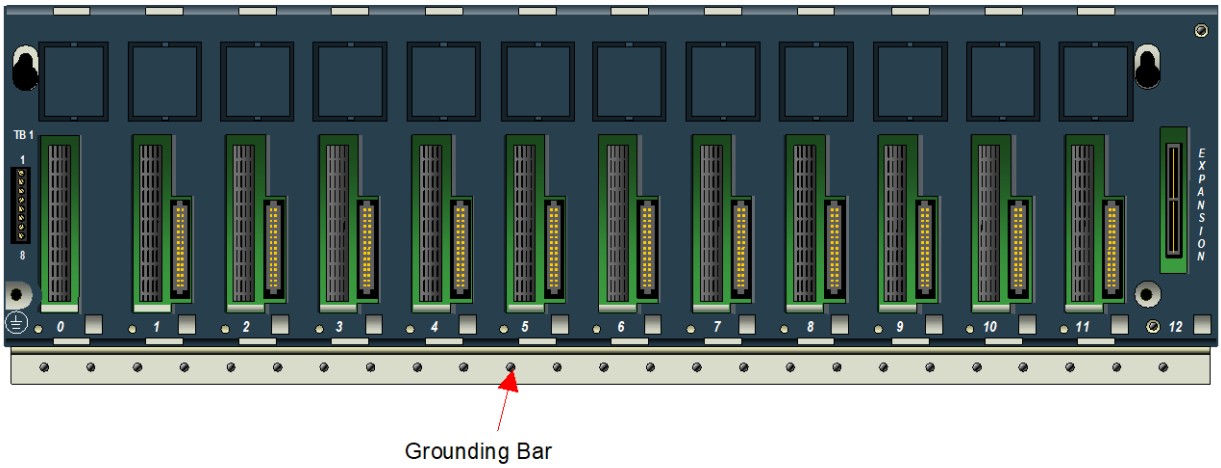

2.6 System Installation

2.6.1 Universal Backplanes

Mount a Universal Backplane using four good quality 8-32 x 1/2 (4 x 12 mm) machine screws, lock washers, and flat washers. Install the screws in the four tapped holes displayed in the following figure.

Figure 14: Location of Mounting Screws for Universal Backplane

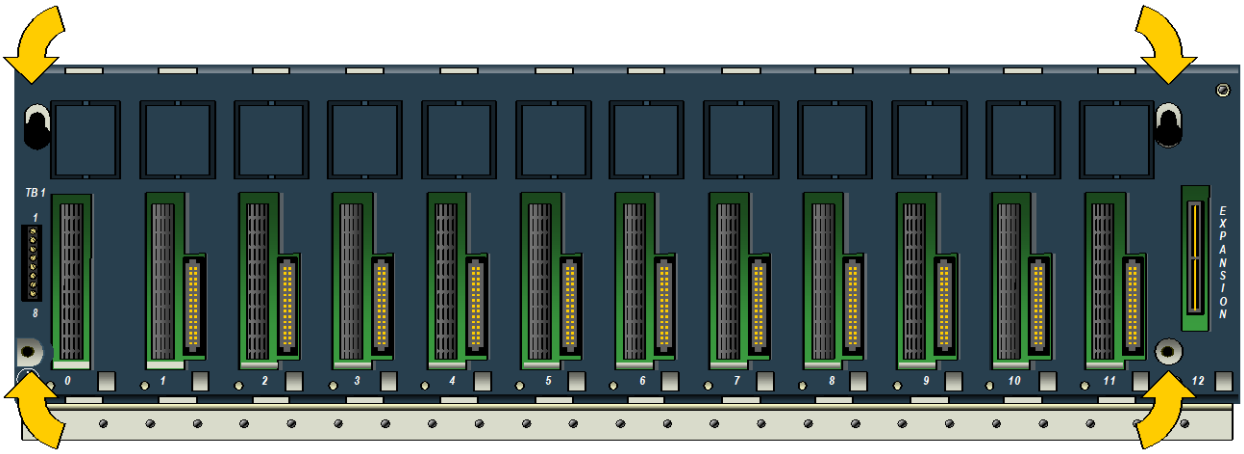

Backplanes must be mounted horizontally, as represented above, to meet product performance and reliability specifications by providing adequate airflow around Modules. Other mounting orientations may affect system performance, reliability, and agency approvals, and are therefore not recommended.

Universal Backplane Terminal TB1

The RX3i IC695 Power Supplies do not provide Isolated +24 Vdc output power over the backplane.

TB1 Terminals 7 and 8 can be used to connect an optional external source of Isolated +24 Vdc (see 0for details). Isolated +24 Vdc is required for some IC693 and IC694 modules as listed in the table of Section 4.2, Module Load Requirements.

These terminals accept individual wires from 14 to 22 AWG.

If modules that require Isolated +24 Vdc are installed in an Expansion Backplane rather than in a Universal Backplane, an external Isolated +24 Vdc power supply will not be required.

Terminals 1 through 6 are not used.

Figure 15: Universal Backplane Terminal TB1

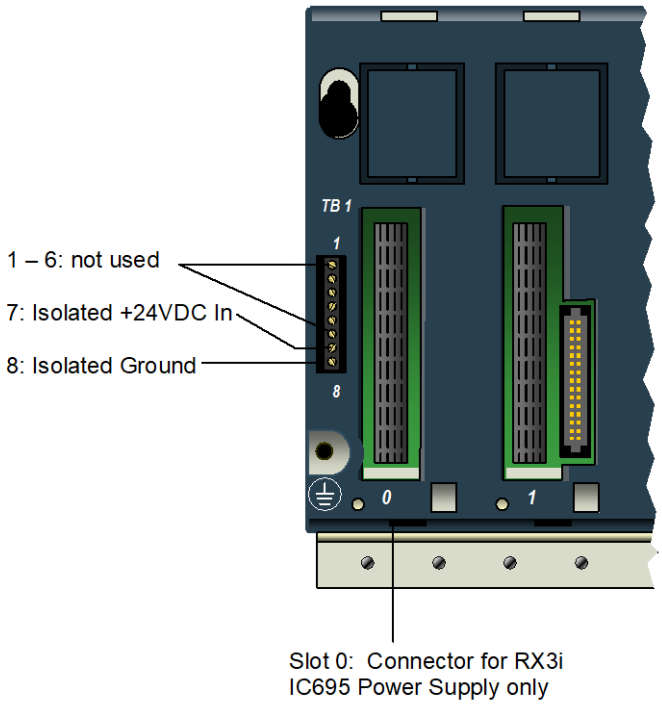

Power Supply Models and Slot Occupancy

Power Supply Catalog Number	#Slots Occupied[2]	Max in Universal Backplane	Redundant Mode	Remote or Expansion Backplane
IC695PSD040	1	1	Not supported	Not supported
IC695PSD140	1	4[3]	Supported	Not supported
IC695PSA040	2	1	Not supported	Not supported
IC695PSA140	2	4[3]	Supported	Not supported
IC695PSD180	1	3	Supported	Not supported
IC693 Power Supplies	Not permitted	Not permitted	N/A	Max 1
IC694 Power Supplies	Not permitted	Not permitted	N/A	Max 1

Universal Backplane Slot Occupancy Rules

- An RX3i CPU module can be installed anywhere in the Universal Backplane except the rightmost (expansion) slot. With the exception of the CPE302/CPE305, CPU modules occupy 2 slots. CPE302 and CPE305 each occupy one slot.
- CPE302, CPE305, I/O, and option modules can be installed in any available slot except the rightmost (expansion) slot and slot 0, which can only accept IC695 Power Supplies. Each I/O slot has two connectors, so can accept either an RX3i PCI-based module or a module with a serial backplane interface.
- The rightmost slot is the expansion slot. It can only be used for optional Serial Bus Transmitter module IC695LRE001.

[2] *IC695 Power Supply modules may be installed in any Universal Backplane slot.*

[3] *Any combination of IC695PSD140 & IC695PSA140, up to max of four.*

2.6.2 Expansion Backplanes

To mount an Expansion Backplane on a panel, use four good-quality 8-32 x 1/2 (4 x 12 mm) machine screws, lock washers, and flat washers. Install the screws in the four tapped holes.

Figure 16: Expansion Backplane

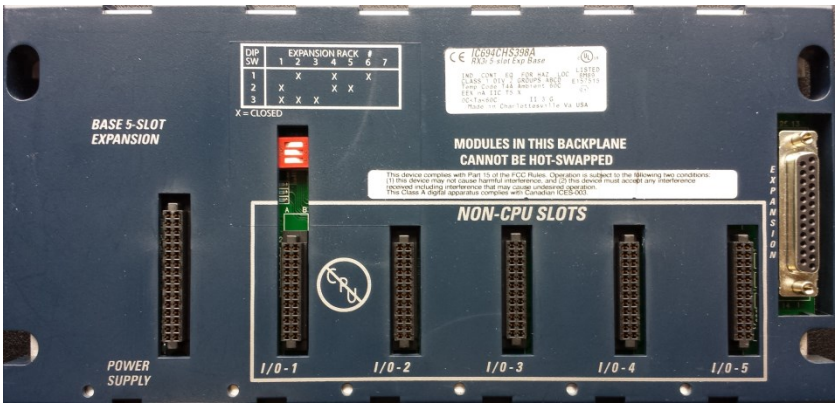

An Expansion Backplane can also be mounted in a 19-inch rack using a mounting bracket as described in this section.

Setting the Rack Number DIP Switch

Each backplane is identified with a unique number called a Rack Number. Rack number 0 is always automatically assigned to the backplane with the CPU. Rack numbers must not be duplicated in a system. Backplanes do not need to be sequentially numbered, although, for consistency, rack numbers should not be skipped.

Rack Numbers for Expansion and Remote backplanes are set using a DIP switch on the backplane. The following table provides the DIP switch positions for rack number selection.

DIP Switch	Rack Number						
	1	2	3	4	5	6	7
1	open	closed	open	closed	open	closed	open
2	closed	open	open	closed	closed	open	open
3	closed	closed	closed	open	open	open	open

For example, these switch settings select rack number 2:

Figure 17: Example of Backplane DIP Switch Setting for Rack Number

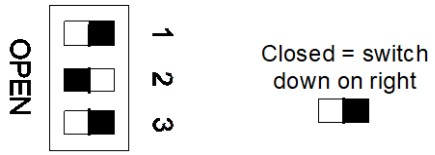

⚠ CAUTION

Do not use a pencil to set the DIP switches. Graphite from the pencil can damage the switch.

Recommended Mounting Orientation for Expansion Backplanes

For Expansion and Remote Backplanes, power supply load rating depends on the mounting position of the backplane and the surrounding temperature.

The load rating with the Expansion Backplane mounted upright on a panel is100% at 60°C (140°F).

Figure 18: Effect on Load Rating, Vertical Mounting

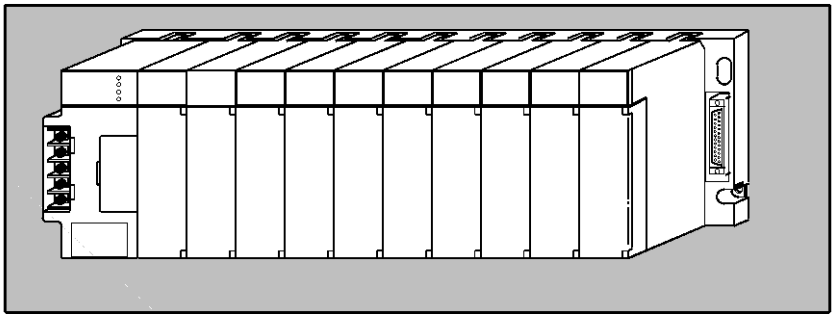

Power supply load ratings with the backplane mounted horizontally are:

- The temperature at 25°C (77°F) – full load
- The temperature at 60°C (140°F) – 50% of full load

Figure 19: Effect on Load Rating, Horizontal Mounting

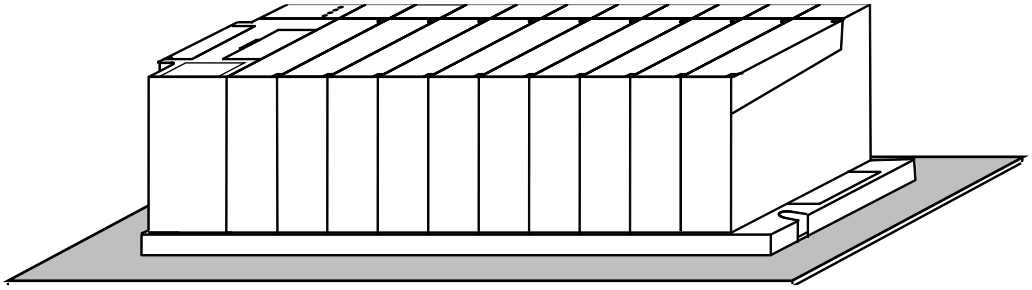

2.6.3 Mounting a Backplane in a 19-Inch Rack

The **IC693ACC308 Front Mount Adapter Bracket (Figure 20)** can be used to mount a 10-Slot Expansion Backplane, IC694CHS392, to the front face of a 19 in rack. Install the adapter bracket by inserting the tabs at the top and bottom of the adapter bracket into the corresponding slots at the top and bottom of the plastic backplane cover. It is not necessary to remove the cover to install the bracket. With the bracket in place, insert and tighten the two screws (included with the bracket) through the back of the backplane holes into the threaded holes in the bracket.

Figure 20: IC693ACC308 Front Mount Adapter Bracket

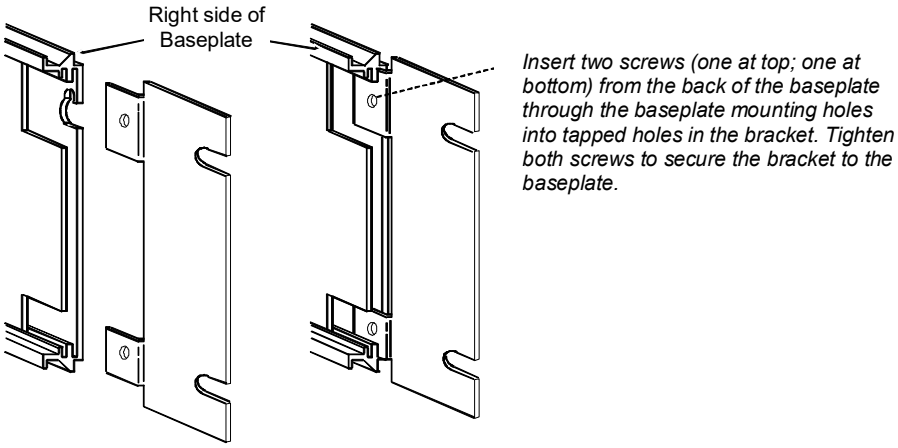

Dimensions for rack mounting a backplane with the IC693ACC308 Front Mount Adapter Bracket are displayed in Figure 21.

Figure 21: Dimensions for Backplane with IC693ACC308 Front Mount Adapter Bracket

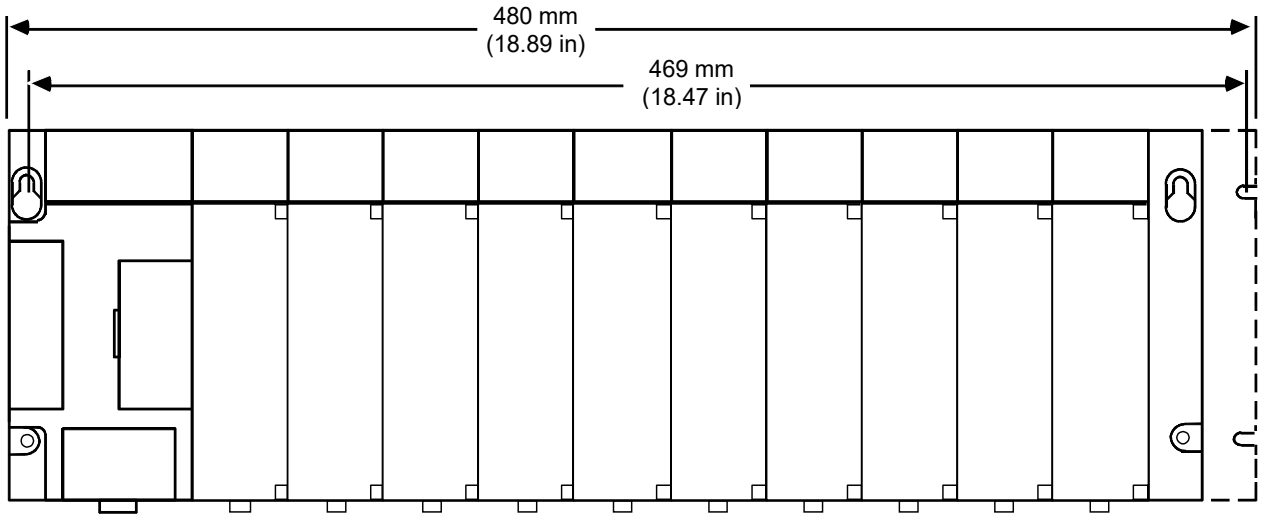

The **IC693ACC313 Recessed Mount Adapter Bracket** can be used to recess-mount a 10-Slot Expansion Backplane, IC694CHS392, inside a 19 in rack. This bracket cannot be used with a Universal Backplane.

An Expansion Backplane mounts on the rear panel of this adapter bracket using four 8-32 (4 mm) screws, nuts, lock washers, and flat washers. The Adapter Bracket bolts through its four slotted holes to the face of the 19 in rack using applicable hardware (lock washers recommended).

Figure 22: IC693ACC313 Recessed Mount Adapter Bracket

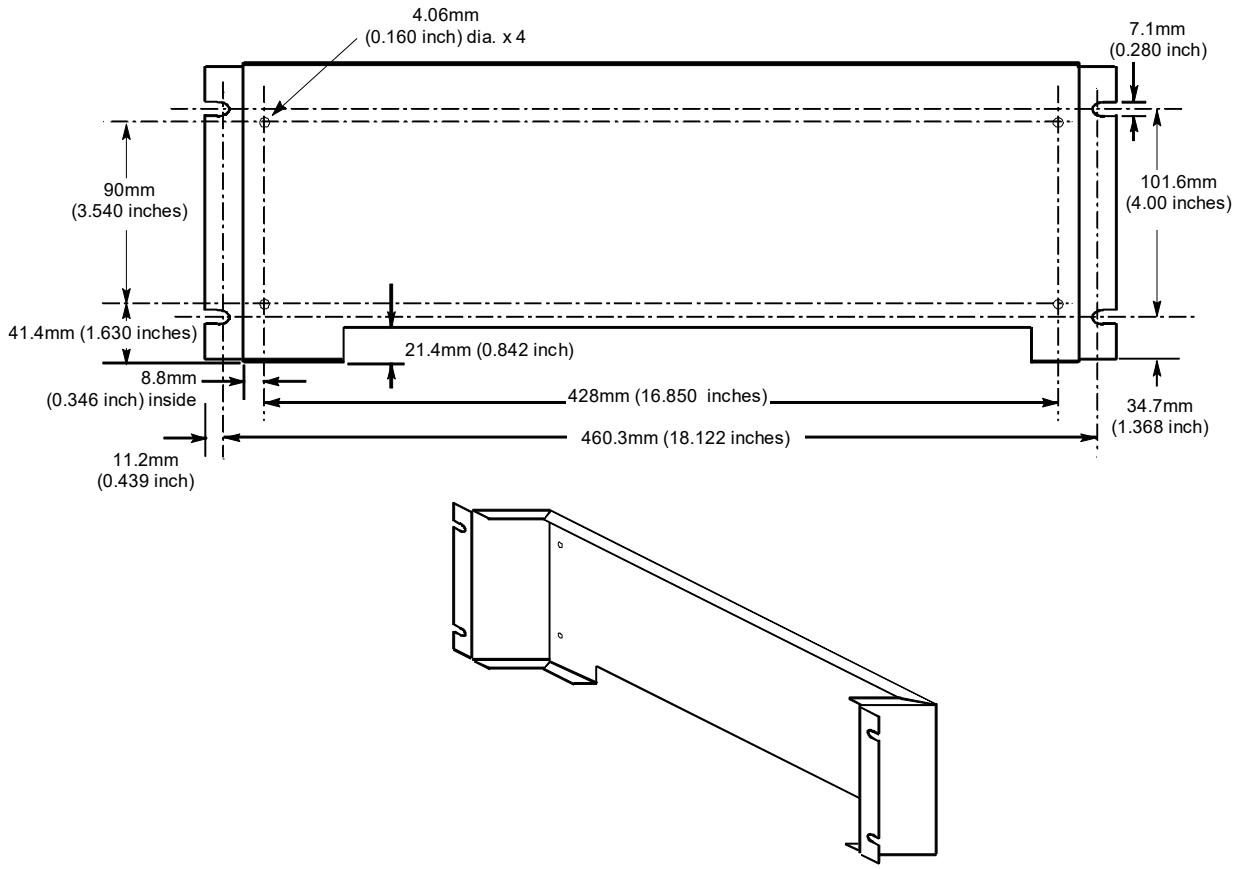

Grounding Rack-Mounted Expansion Backplanes

If an Expansion Backplane is mounted in a 19 in rack using an Adapter bracket, the rack must be properly grounded as described in the section, *System Grounding Procedures*. Also, the backplane should be grounded according to the guidelines in the section, *Backplane Safety Grounding*, using a separate ground wire from the PLC backplane.

- For a Recessed Mount Adapter Bracket (IC693ACC313), the ground wire can be installed with the ground attached to the Recessed Mount Adapter Bracket. An additional ground wire should be installed that connects the Adapter Bracket to solid chassis ground.
- For a Surface Mount Adapter Bracket (IC693ACC308), the ground wire should be run from the backplane to a solid chassis ground on the rack.

2.6.4 Modules

Hot Insertion and Removal

In general, modules in a Universal Backplane (IC695CHS007, CHS012, or CHS016) can be installed or removed while power is applied to the system. This includes backplane power and field power supplied to Module. However, no CPU modules fall into this category. The following table lists the I/O modules that do not support this feature or have not yet been verified to support this feature.

Note: For products that support hot insertion, Module must be properly seated on the carrier with the latch engaged and all pins connected within 2 seconds. For removal, Module must be completely disengaged from the carrier within 2 seconds. It is important that Module not remain partially inserted during the insertion or removal process. There must be a minimum of two seconds between the removal and insertion of modules.

Note: A CPU module cannot be installed or removed from a Universal Backplane while power is applied to the system. System power must be removed before installing or removing the CPU.

Note: The hot swap feature is not supported in any of the Rx3i Expansion and Remote expansion backplanes. Doing so may damage the module or backplane hardware and disrupt the module operations.

The following modules support hot insertion and removal, with restrictions as noted:

Catalog Number	Hot-Swap Compatible	Notes / Restrictions on Hot Swap Capability
IC693ACC300	Yes	
IC694ACC300	Yes	
IC695ALG106	Yes	
IC695ALG112	Yes	
IC693ALG222	Yes - Revision FA & later	Revision E & earlier do not support hot swap.
IC694ALG222	Yes - Revision BA & later	Revision A does not support hot-swap.
IC693ALG223	Yes - Revision EA & later	Revision D & earlier do not support hot swap.
IC694ALG223	Yes - Revision BA & later	Revision A does not support hot-swap.
IC694ALG232	Yes	
IC694ALG233	Yes	
IC695ALG306	Yes	
IC695ALG312	Yes	

Catalog Number	Hot-Swap Compatible	Notes / Restrictions on Hot Swap Capability
IC693ALG391	Yes	
IC693ALG392	Yes	
IC694ALG392	Yes	
IC695ALG412	Yes	
IC693ALG442	Yes - Revision DA & later	Revision C & earlier do not support hot swap.
IC694ALG442	Yes - Revision BA & later	Revision A does not support hot-swap.
IC695ALG508	Yes	
IC694ALG542	Yes	Hot-swap can be performed only on main rack with field-side terminal block removed from the module. The terminal block is to be removed before hot extraction from the RX3i Universal Backplane and re-installed after hot insertion.
IC695ALG600	Yes	
IC695ALG608	Yes	
IC695ALG616	Yes	
IC695ALG626	Yes	
IC695ALG628	Yes	
IC695ALG704	Yes	
IC695ALG708	Yes	
IC695ALG728	Yes	
IC695ALG808	Yes	
IC693APU300	Yes – Revision MA & later	Revision L and earlier do not support hot swap.
IC694APU300	Yes – Revision CA & later	Revision -BA and earlier do not support hot swap.
IC693APU305	Yes	
IC694APU305	Yes	
IC693BEM331	Yes	Genius Bus Controller modules that are included in a Max-ON redundancy system should not be installed or removed from the PLC that is operating as a Master. If a module is removed from the Master and then re-installed, the outputs for that module will not be enabled until the next Backup-to-Master transition. Any time a Genius Bus Controller is removed from an active system, there is a possibility that the bus may be disrupted with a subsequent impact on the corresponding I/O devices. For systems that require online maintainability, it is recommended that dual (redundant) Genius busses be used. Otherwise, the BEM331 can be hot-swapped.
IC694BEM331	Yes	
IC695CMM002	Yes	
IC695CMM004	Yes	

Catalog Number	Hot-Swap Compatible	Notes / Restrictions on Hot Swap Capability
IC695CMX128	Yes	
IC693DSM324	Yes	
IC694DSM324	Yes	
IC695ECM850	Yes	
IC695EDS001	Yes	
IC695EIS001	Yes	
IC695ETM001	Yes	
IC695GCG001	Yes	The Genius Communications Gateway requires an external 24 Vdc power supply and does not draw power from the RX3i backplane. Swapping out the GCG001 will therefore not impact the PLC. However, this cannot be performed without disconnecting its power supply. If configured to support Genius Hot Standby, the loss of a single GCG001 will be tolerated; otherwise not.
IC695HSC304	Yes	
IC695HSC308	Yes	
IC693MDL230	Yes	
IC694MDL230	Yes	
IC693MDL231	Yes	
IC694MDL231	Yes	
IC693MDL240	Yes	
IC694MDL240	Yes	
IC693MDL241	Yes	
IC694MDL241	Yes	
IC693MDL250	Yes	
IC694MDL250	Yes	
IC693MDL260	Yes	
IC694MDL260	Yes	
IC693MDL310	Yes	
IC694MDL310	Yes	
IC693MDL330	Yes	
IC694MDL330	Yes	
IC693MDL340	Yes	
IC694MDL340	Yes	
IC693MDL350	Yes	
IC694MDL350	Yes	
IC693MDL390	Yes	
IC694MDL390	Yes	
IC693MDL632	Yes	
IC694MDL632	Yes	

Catalog Number	Hot-Swap Compatible	Notes / Restrictions on Hot Swap Capability
IC693MDL634	Yes	Hot-swap can only be performed with field-side terminal block removed from Module. The terminal block is to be removed before hot extraction from the RX3i Universal Backplane and re-installed after hot insertion.
IC694MDL634	Yes	
IC693MDL635	Yes	
IC694MDL635	Yes	
IC693MDL645	Yes	Hot-swap can only be performed with field-side terminal block removed from Module. The terminal block is to be removed before hot extraction from the RX3i Universal Backplane and re-installed after hot insertion.
IC694MDL645	Yes	
IC693MDL646	Yes	Hot-swap can only be performed with field-side terminal block removed from Module. The terminal block is to be removed before hot extraction from the RX3i Universal Backplane and re-installed after hot insertion.
IC694MDL646	Yes	
IC693MDL648	Yes	Hot-swap can only be performed with field-side terminal block removed from Module. The terminal block is to be removed before hot extraction from the RX3i Universal Backplane and re-installed after hot insertion.
IC694MDL648	Yes	
IC693MDL654	Yes	
IC694MDL654	Yes	
IC693MDL655	Yes	
IC694MDL655	Yes	
IC694MDL658	Yes	
IC693MDL660	Yes	
IC694MDL660	Yes	
IC695MDL664	Yes	
IC693MDL730	Yes	
IC694MDL730	Yes	
IC693MDL731	Yes	
IC693MDL732	Yes	
IC694MDL732	Yes	
IC693MDL733	Yes	
IC693MDL734	Yes	
IC694MDL734	Yes	
IC693MDL740	Yes	
IC694MDL740	Yes	
IC693MDL741	Yes	
IC694MDL741	Yes	
IC693MDL742	Yes	
IC694MDL742	Yes	

Catalog Number	Hot-Swap Compatible	Notes / Restrictions on Hot Swap Capability
IC693MDL748	Yes	
IC693MDL752	Yes	
IC694MDL752	Yes	
IC693MDL753	Yes	
IC694MDL753	Yes	
IC693MDL754	Yes	
IC694MDL754	Yes	
IC694MDL758	Yes	
IC695MDL765	Yes	
IC693MDL916	Yes	
IC694MDL916	Yes	
IC695PBM300	Yes	
IC695PBS301	Yes	
IC695PMM335	Yes	Hot-Swap can only be performed while PLC is in STOP mode
IC695PNC001	Yes	
IC695PRS015	Yes	
IC695PSA140	Yes	Hot-swappable only when redundant power supplies are present, and each is powered up.
IC695PSD140	Yes	Hot-swappable only when redundant power supplies are present, and each is powered up.
IC695PSD180	Yes	Hot-swappable only when redundant power supplies are present, and each is powered up.
IC694PSM001	Yes	
IC695RMX128	Yes	
IC695RMX228	Yes	

⚠ WARNING

Inserting or removing a module with power applied to the system may cause an electrical arc. This can result in unexpected and potentially dangerous action by field devices. Arcing is an explosion risk in hazardous locations. Be sure that the area is non-hazardous or remove system power before removing or inserting a module.

⚠ WARNING

Do not insert or remove modules in RX3i Serial Expansion Backplanes or Series 90-30 Expansion Backplanes with power applied to the backplane. This could cause the PLC to stop or malfunction. Injury to personnel and

damage to Module or backplane may result. If the PLC is in RUN mode, I/O data to/from this backplane will not be updated while the power is removed.

Hot Insertion and Removal Not Supported

The following modules **do not support** hot insertion and removal. Do not attempt to insert or remove them while power is applied to the rack.

Catalog Number	Notes
IC693ALG220	
IC694ALG220	
IC693ALG221	
IC694ALG221	
IC693ALG222	Revision E & earlier do not support hot swap.
IC694ALG222	Revision A does not support hot swap.
IC693ALG223	Revision D & earlier do not support hot swap.
IC694ALG223	Revision A does not support hot swap.
IC693ALG390	
IC694ALG390	
IC694ALG391	
IC693ALG442	Revision C & earlier do not support hot swap.
IC694ALG442	Revision A does not support hot-swap.
IC693APU300	Revision L and earlier do not support hot swap.
IC694APU300	Revision -BA and earlier do not support hot swap.
IC693BEM320	
IC694BEM320	
IC693BEM321	
IC694BEM321	
IC693BEM341	
IC695CMU310	Head-end unit - shuts down everything if removed.
IC695CPE302	Head-end unit - shuts down everything if removed.
IC695CPE305	Head-end unit - shuts down everything if removed.
IC695CPE310	Head-end unit - shuts down everything if removed.
IC695CPE330	Head-end unit - shuts down everything if removed.
IC695CPU310	Head-end unit - shuts down everything if removed.
IC695CPU311	Head-end unit - shuts down everything if removed.
IC695CPU315	Head-end unit - shuts down everything if removed.
IC695CPU320	Head-end unit - shuts down everything if removed.
IC695CRU320	Head-end unit - shuts down everything if removed.
IC693DNM200	
IC694DNM200	
IC693DSM314	
IC694DSM314	
IC695LRE001	Can cause communications issues with remote racks if hot-swapped.

Catalog Number	Notes
IC693MAR590	
IC693MDL760	
IC693MDL930	
IC694MDL930	
IC693MDL931	
IC694MDL931	
IC693MDL940	
IC694MDL940	
IC693MDR390	
IC694MDR390	
IC695NIU001	Head-end unit - shuts down everything if removed.
IC695PNS001	Head-end unit - shuts down everything if removed.
IC695PNS101	Head-end unit - shuts down everything if removed.
IC695PSA040	The only power source in the rack - shuts everything off and can cause corrupt user memory if hot removed.
IC695PSD040	The only power source in the rack - shuts everything off and can cause corrupt user memory if hot removed.

Installing Modules

⚠ WARNING

Potentially dangerous voltages may be present on the screw terminals of Module, even though the power to the backplane is turned off. Always be careful when handling the removable terminal board of Module and any wires connected to it.

- Be sure Module catalog number matches the intended slot configuration.
- Holding Module firmly, align Module with the correct slot and connector.
- Engage the rear pivot hook(s) of Module (Figure 23) in the notch(es) on the top of the backplane (1).
- Swing Module down (2) until the connector of Module engages the backplane connector, and the release lever(s) on the bottom of Module snaps into place in the bottom module retainer (3).
- Visually inspect Module to be sure it is properly seated.

Figure 23: Installing Module in Backplane

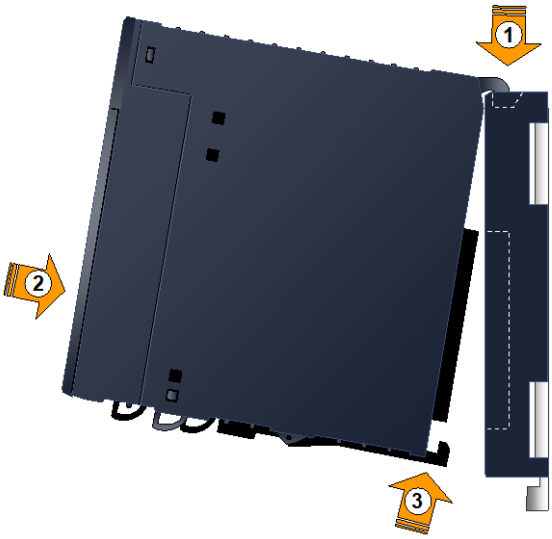

- If there are any issues encountered during installation of a module, verify the backplane connector pins of the module to ensure that all the pins are intact, before trying to insert the same module second time following the above procedure.

Removing Modules

- If Module has a removable terminal board, remove it as described later in this section.
- Locate the release lever(s) at the bottom of Module (Figure 24) and firmly press upward (1), toward Module. Wider modules have two release levers that must both be pressed up at the same time.
- While holding Module firmly and fully depressing the release lever(s), pivot Module upward until its connector is out of the backplane (2).
- Lift Module up and away from the backplane to disengage the pivot hook.

Figure 24: Removing Module from Backplane

I/O Module Terminal Block Assemblies

Most PACSystems RX3i I/O modules have removable front terminal block assemblies. Each module of this type has a door label that can be removed, marked up as required for the application, then re-inserted into the retaining grooves, (Figure 27). The front of the label (Figure 25) displays the catalog number of Module and a color band to indicate Module type. It also provides space to record identifying application information about the inputs or outputs wired to Module. The wiring diagram is printed on the reverse side and is visible to the technician (Figure 26) once the door is swung open.

The terminal blocks have fully-hinged doors that can be opened to either the left or right to access wiring.

Figure 27: Insertion of Door Label following Mark-up for Application

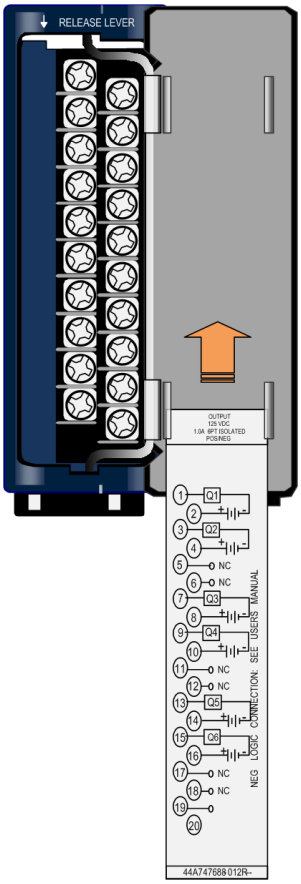

Figure 25: Module Door Label Front View

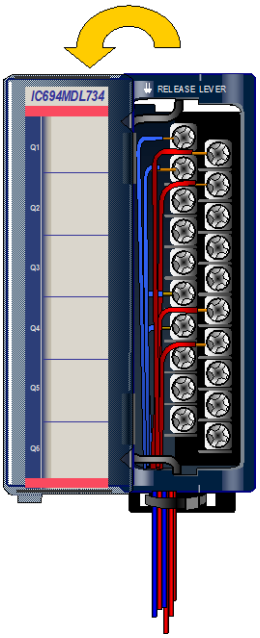

Figure 26: Wiring Diagram on Reverse Side of Door

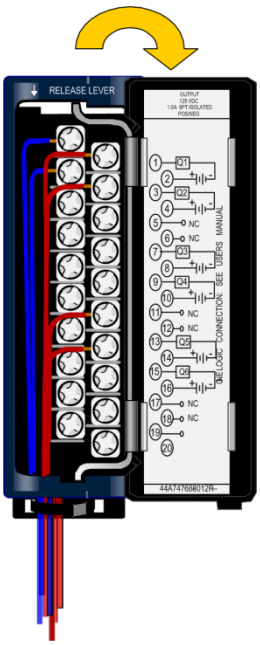

I/O Module Connections

For most RX3i I/O modules, connections are made to the removable terminal board of Module. Specific wiring information for each module is printed on the door insert and also shown in Module description in this manual.

This section describes the 20-Connector removable terminal block (Figure 28), which is used by most RX3i I/O modules. Higher-density modules use other connection methods.

Refer to Chapter 17 for details concerning the following:

- 36-pin removable terminal blocks are used for most higher-density modules.
- Connections to I/O modules that have two 20-Connector connectors on the front of Module.
- Terminal Board Quick Connect (TBQC) system that allows users to land the field wiring on interposing terminal strips and complete the connection to the I/O module using pre-fabricated interconnect cables.

Screw terminals on a 20-Connector terminal block accept from two AWG #22 (0.36 mm^2) to two AWG #16 (1.3 mm^2), or one AWG #14 (2.1 mm^2) copper 90°C (194°F) wire(s). Each terminal can accept solid or stranded wires, but the wires into any given terminal should be the same type (both solid or both stranded) to ensure a good connection. Wires are routed to and from the terminals out of the bottom of the terminal board cavity. The suggested torque for the I/O terminal board connection screws is from 1.1 to1.3 Nm (9.6 to 11.5 in-lb.).

Figure 28: 20-Connector removable terminal block with Tie Wrap Landing Location noted

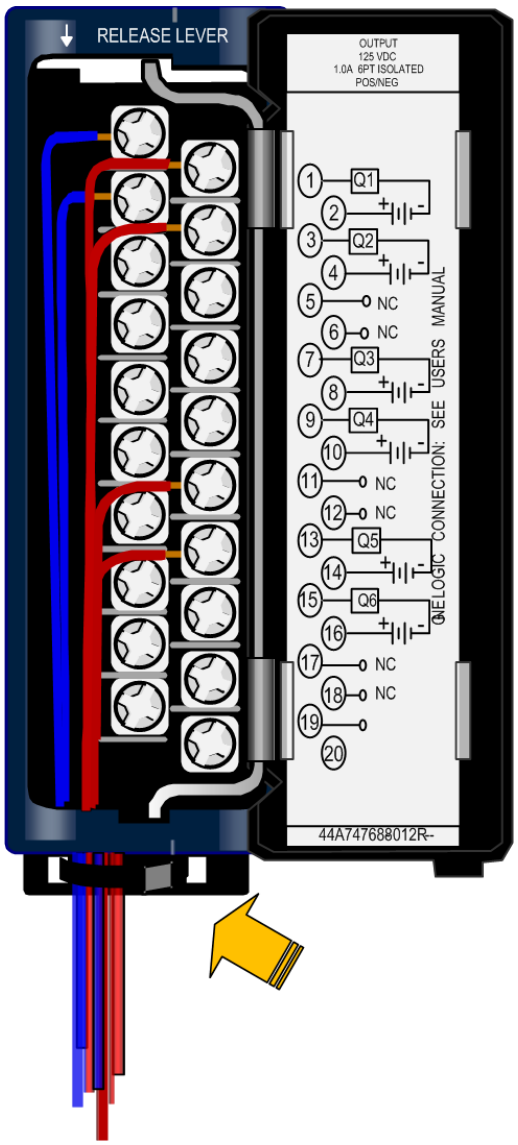

After the wiring is completed, wires should be bundled and fastened at the bottom of the terminal block, as shown in Figure 28.

Installing or Removing a 20-Connector Terminal Block Assembly

Refer to Section 17: for instructions for installing or removing a 36-pin terminal assembly. Compare Module catalog number on the label on the terminal assembly door and the label on the side of the to be sure they match. If a wired terminal block is installed on the wrong module type, Module may be damaged when the system is powered up.

⚠ WARNING

Field power must be turned off when installing or removing a Terminal Block assembly.

Installing a Terminal Block

To install a terminal block (Figure 29):

1. Insert the pivot hook on the bottom of the terminal block assembly into the slot on the bottom of Module.
2. Pivot the terminal block assembly upward to engage the connector.
3. Press the terminal block assembly toward Module until the release lever latch snaps into place. Check to be sure the terminal block is firmly seated.

Figure 29: Installing Terminal Block into I/O Module

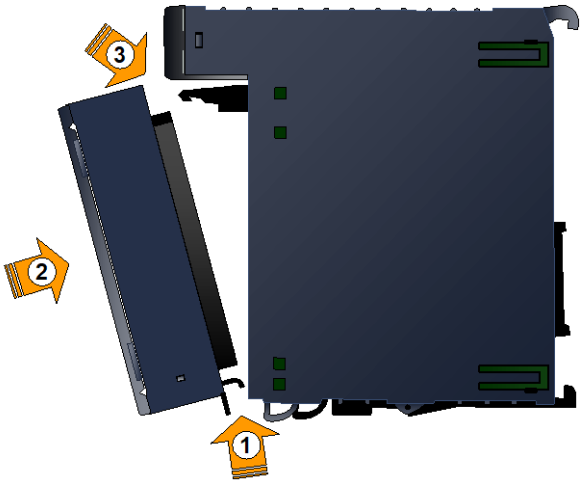

Figure 30: Release Lever Usage prior to Removal from I/O Module

Removing a Terminal Block

To remove a terminal block:

1. Open the terminal block door.
2. Push up the release lever (Figure 30) to unlock the terminal block.
3. Pull the terminal block away from Module until the contacts have separated and the bottom pivot hook has disengaged.

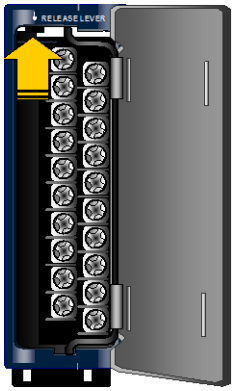
RELEASE LEVER

Installing or Removing a Terminal Block Cover

The terminal block assembly cover can be removed for easier access to the terminals.

⚠ WARNING

Potentially dangerous voltages from user devices may be present on the screw terminals of Module, even though the power to the backplane is turned off. Always be careful when handling the removable terminal block assembly of Module and any wires connected to it.

Figure 31: Extraction or Insertion of Terminal Block into its Cover

Removing a Terminal Block from its Cover

To remove a Terminal Block from its cover:

1. Grasp the sides of the Terminal Block cover.
2. Pull down on the bottom of the Terminal Block as shown in Figure 31.

Inserting a Terminal Block in its Cover

To re-insert a Terminal Block in its cover:

1. Align the top of the Terminal Block with the bottom of the cover, making sure that the notches in the Terminal Block match up with the grooves in the cover.
2. Slide the Terminal Block upward (Figure 31) until it clicks into place.

Positive and Negative Logic Connections to Discrete Modules

The IEC definitions for positive logic and negative logic for PACSystems RX3i modules are described in the following sections.

Positive Logic

Positive logic input modules (Figure 32) sink current from the input device to the user common or negative power bus. The input device is connected between the positive power bus and the input terminal.

Positive logic output modules (Figure 33) source current to the loads from the user common or positive power bus. The load is connected between the negative power bus and Module output.

Figure 32: Positive Logic Input Circuit

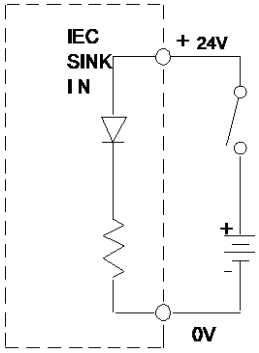

Figure 33: Positive Logic Output Circuit

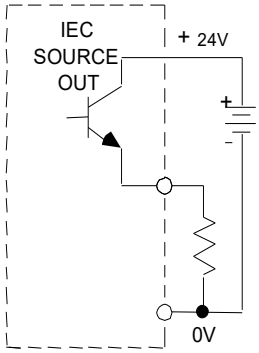

Negative Logic

Negative logic input modules (Figure 34) source current through the input device to the user common or positive power bus. The input device is connected between the negative power bus and the input terminal.

Negative logic output modules (Figure 35) sink current from the loads to the user common or negative power bus. The load is connected between the positive power bus and the output terminal.

Figure 34: Negative Logic Input Circuit

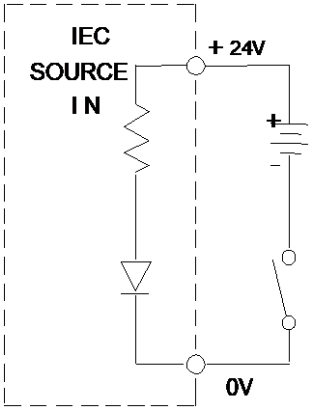

Figure 35: Negative Logic Output Circuit

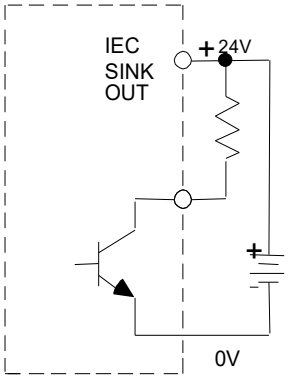

Wiring for Analog Modules

A twisted, shielded instrumentation cable is strongly recommended for analog module input or output signal connections. Proper grounding of the shield is also important. For maximum electrical noise suppression, the cable shield should only be grounded at one end of the cable.

It is generally best to ground the cable shield as close to the source of the noise as possible. For Analog Input modules, ground the end that is in the noisiest environment (usually the field device end). Cut the shield off at Module end of the cable and insulate with shrink tubing. For Analog Output modules, the ground at Module end. Cut the shield off at the device end of the cable and insulate with shrink tubing.

It is best to keep the length of stripped cable leads as short as possible to minimize the length of unshielded conductors exposed to the noisy environment.

Connections can be made directly to Module terminals, or via an intermediate terminal block. The diagrams in this section show wiring for various types of analog input and analog output installations.

Shielding for Analog Input Modules

Generally, the shield for analog input cables should be grounded at the analog source. However, ground connections for each channel, labeled COM and GND, can be used to connect shields at the analog input module if appropriate. The COM terminals of the analog input module connect to the analog circuit common in Module. The GND terminals connect to the backplane (frame ground). Shields may be connected to either COM or GND. This section shows four shields grounding examples for analog input modules.

Analog Input Shield Grounding with a Terminal Strip

For an unbalanced source, the ground shield should be connected to the source common or ground at the source end. If all source inputs to Module come from the same location and are referenced to the same common, all shield grounds should be connected to the same ground point. If there is an additional terminal strip between the analog input module and the field devices (analog sources), use the method displayed in the following figure to continue each cable shield using a terminal on the terminal strip. Each cable is only grounded at one end - the end closer to the field devices (analog sources). Shield connections are shown in red (bold) in Figure 36.

Figure 36: Analog Input Shield Grounding with a Terminal Strip

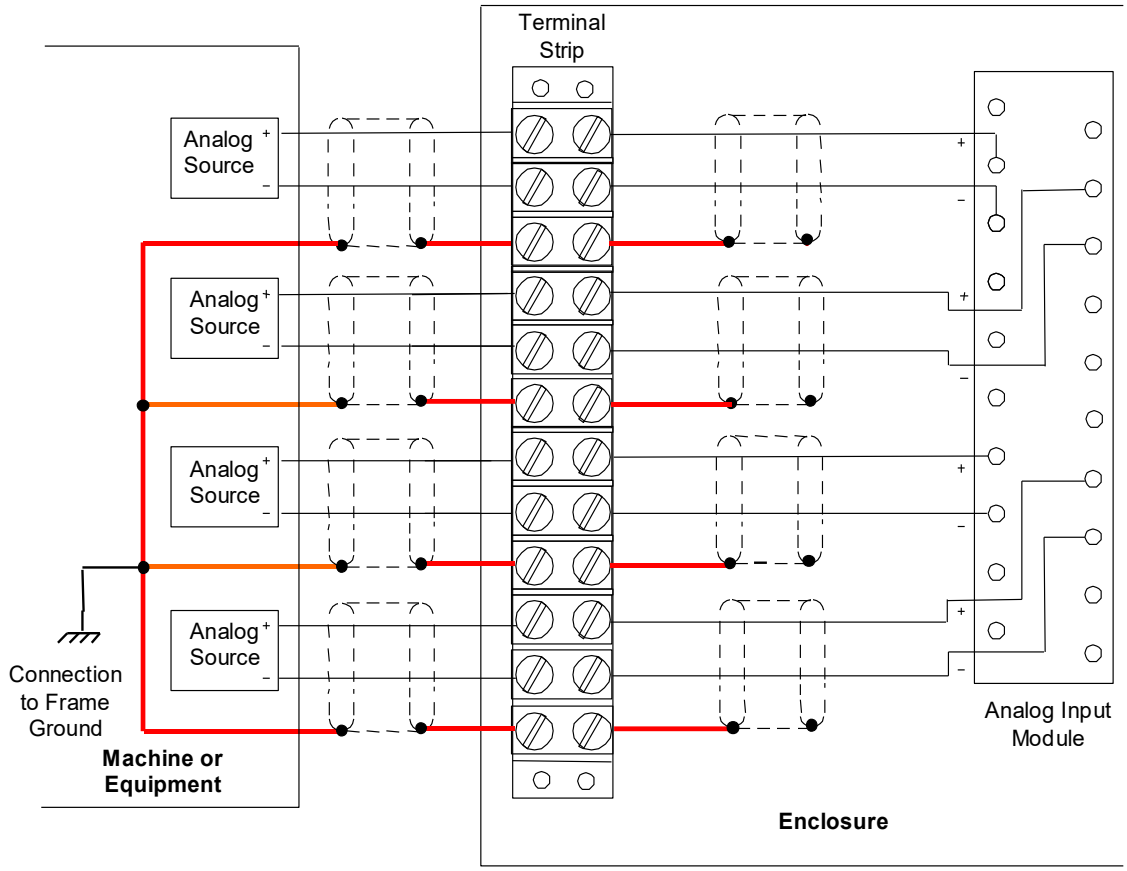

Analog Input Shield Grounding to Common Connections

In some applications, noise rejection can be improved by connecting the source common points at the source end, then connecting a common line to Module at only one module COM terminal. That will eliminate multiple grounding or ground loops that could cause false input data. The common connections here are shown in red (bold) in Figure 37.

Figure 37: Analog Input Shield Grounding to Common Connections

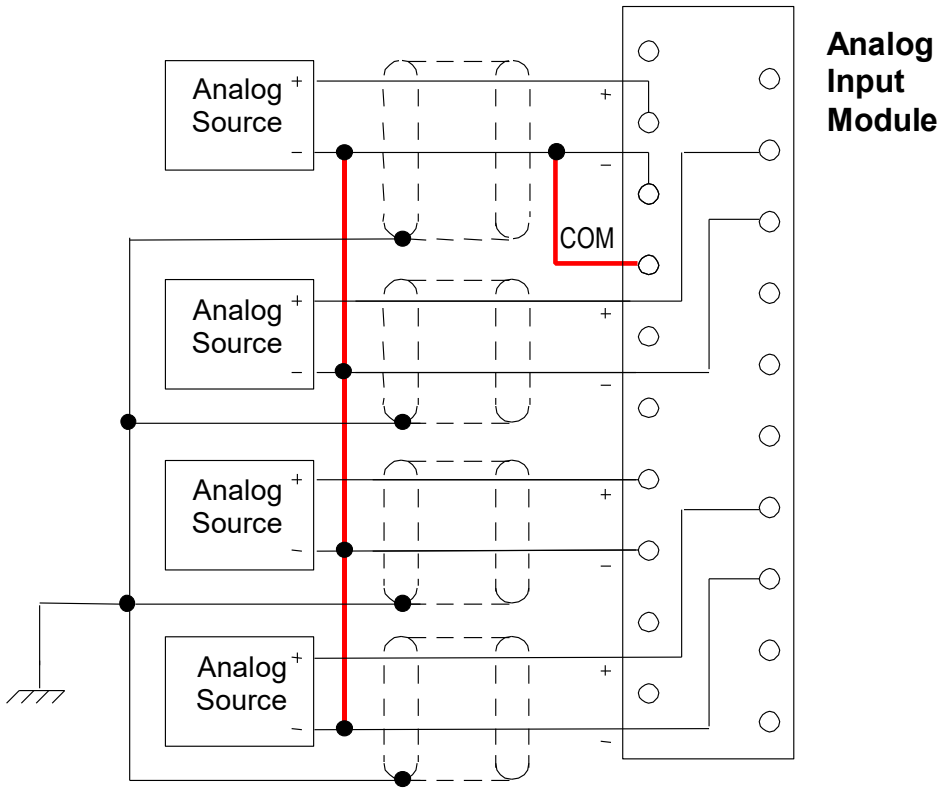

Analog Input Shields Connected to Module Terminal Board

It is usually preferable to ground cable shields at the source end. If that is difficult, or if electrical noise is not a concern, it may be acceptable to ground cable shields at the analog input module end. They can be connected to one of the GND terminals of Module (which are connected to the frame ground through an internal path) as shown left below. If necessary to improve noise immunity, a conductor can be used to connect a GND terminal on Module to the earth ground as displayed in Figure 38. This will bypass noise around Module.

Figure 38: Analog Input Shields Connected to Module Terminal Board

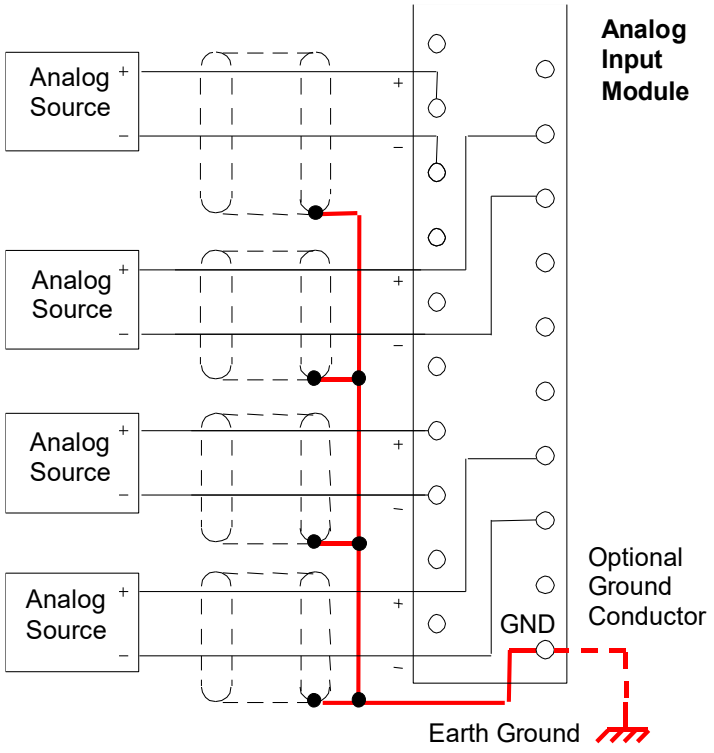

Wiring for Current Transducers

For all of the examples displayed in Figure 39 through Figure 42, connect the (-) conductor to the Analog Input module COM terminal, if the source is floating, to limit common-mode voltages. Common mode voltage is limited to 11 V.

If noise causes inaccurate readings, the (-) conductor can also be connected to the Analog Input module GND terminal.

Figure 39: 4-Wire Transducer, Externally Powered by AC or DC Supply

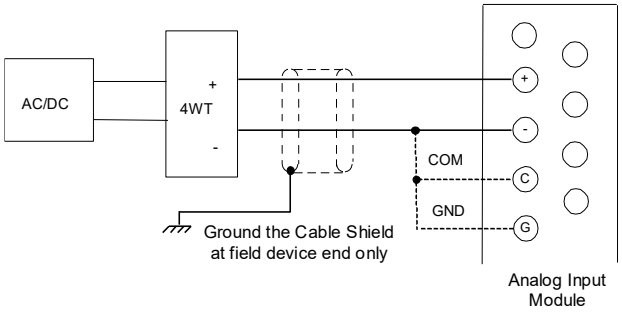

Figure 40: 2-Wire Transducer, Externally Powered by DC Supply

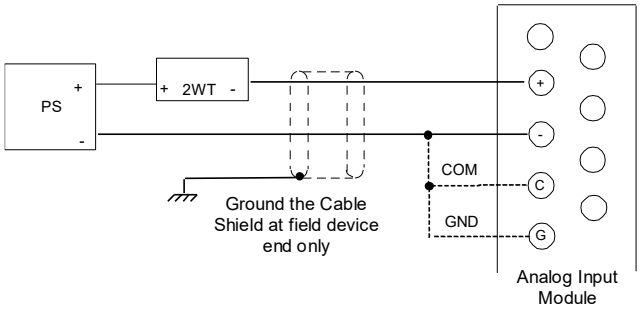

Figure 41: 3-Wire Transducer, Externally Powered by DC Supply

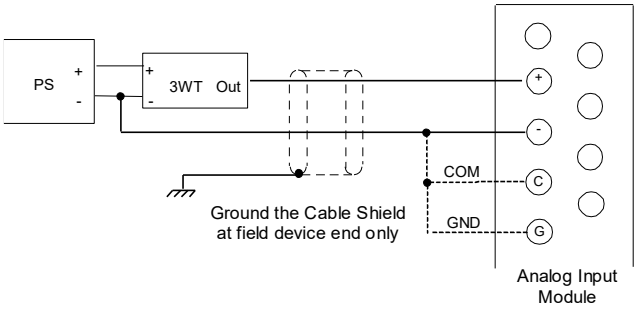

Figure 42: 2-Wire Transducer, Self-Powered

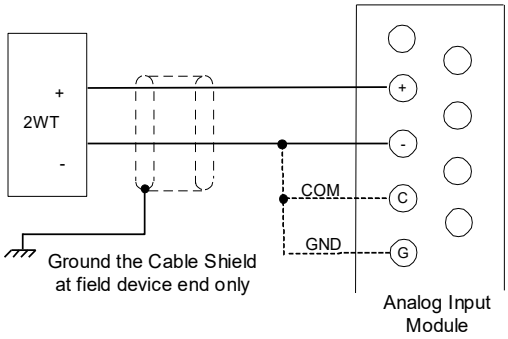

2-Wire Transducer Connected to Two Measuring Devices

As shown in Figure 43, connect the (-) conductor to the Analog Input module COM terminal, if the source is floating, to limit common-mode voltages. Common mode voltage is limited to 11 V.

If noise causes inaccurate readings, the (-) conductor can also be connected to the Analog Input module GND terminal.

The analog module must be the last device on the circuit. When grounding the (-) return side of the Analog Input Module, the other current-sensing device must be floating and able to withstand a common-mode voltage of at least 20 V, including the noise level.

Figure 43: 2-Wire Transducer Connected to Two Measuring Devices

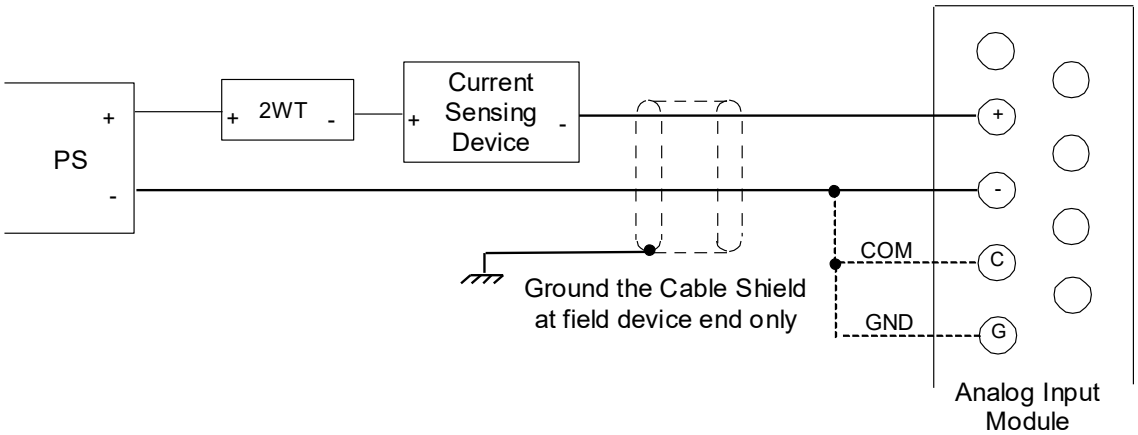

Verifying Analog Input Current

RX3i Analog Current Input Modules have an internal 250 Ω resistor across the input terminals. You can measure the voltage across the input terminals using a voltmeter, then use Ohm's Law to determine the input current:

Input Current (in Amps) = V / 250

For example, if you measured 3 V across the input terminals:

Input Current (in Amps) = 3/250

Input Current (in Amps) = 0.012 (or 12 mA)

Shield Connections for Analog Output Modules

For analog output modules, the shield is normally grounded only at the source end (i.e. at Module - Figure 44). The GND connection provides access to the backplane (frame ground) resulting in superior rejection of noise caused by any shield drain currents. In extreme-noise environments, you can connect an optional ground braid from the GND terminal to an external earth ground to bypass noise around Module.

Figure 44: Shield Connections for Analog Output Module

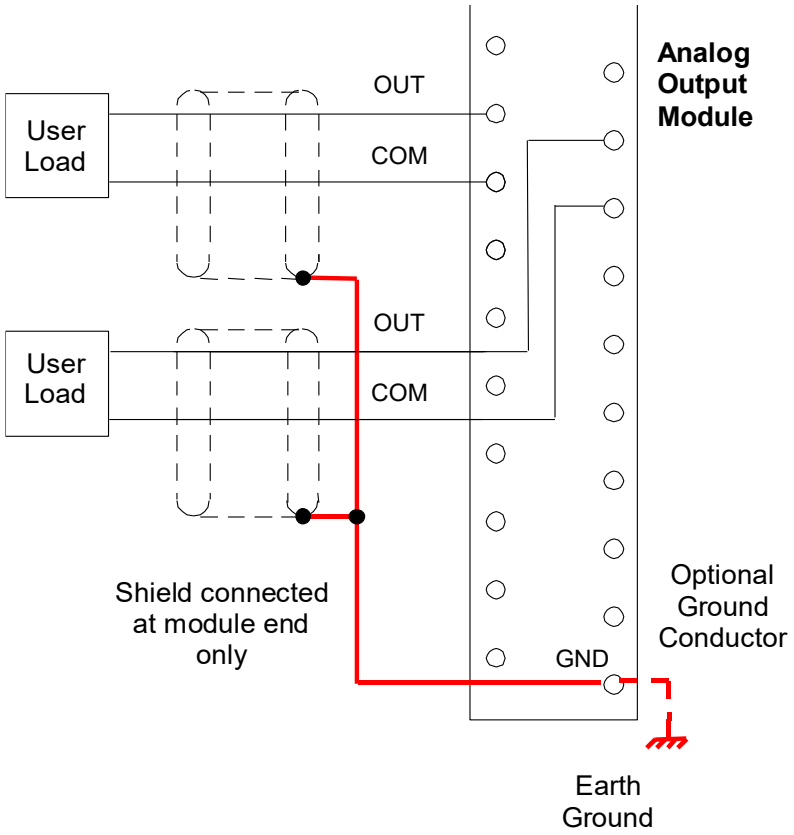

Analog Output Shield Grounding with a Terminal Strip

If there is a terminal strip between the analog output module and the field devices (user loads), use the method in Figure 45 for grounding the cable shields. Each cable is only grounded at one end, the end closer to the Analog Output Module. An optional external ground connection to the GND terminal of Module is illustrated for installations that require extra noise suppression.

Figure 45: Analog Output Shield Grounding with a Terminal Strip

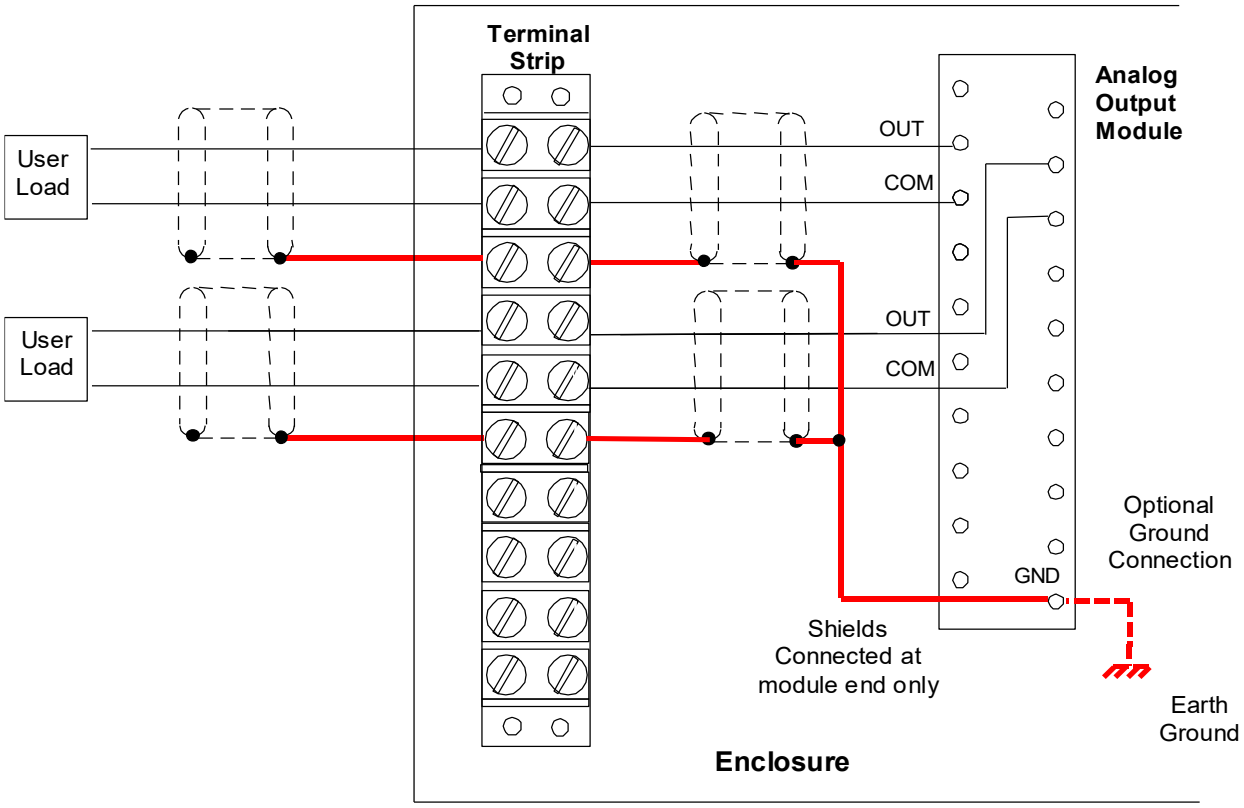

Module Fuse List

⚠ WARNING

Replace fuse only with the correct size and type. Using an incorrect fuse can result in harm to personnel, damage to equipment, or both.

Module Catalog Number (note)	Module Type	Current Rating	Quantity on Module	Emerson Fuse Part Number	Other Sources and Part Numbers
IC694MDL310[4]	120 Vac, 0.5 A	3 A	2	44A724627-111	Bussman – GMC-3 Littlefuse – 239003
IC694MDL330[4]	120/240 Vac, 1 A	5 A	2	42G6101-0013	Bussman - S506-5-R Schurter - 034.3124
IC694MDL340[4]	120 Vac, 0.5 A	3 A	2	44A724627-111	Bussman – GMC-3 Littlefuse – 239003
IC694MDL390[4]	120/240 Vac, 2 A	3 A	5	44A724627-111	Bussman – GMC-3 Littlefuse – 239003
IC694PWR321[5] IC694PWR330[5]	120/240 Vac or 125 Vdc Input, 30 W Power Supply	2 A	1	44A724627-109	Bussman – 215-002 (GDC-2 or GMC-2) Littlefuse – 239-002
IC694PWR331[5]	24 Vdc Input, 30 W Power Supply	5 A	1	44A724627-114	Bussman – GMC-5-R

[4] *Fuse is mounted in clip accessible by removing circuit board from module housing.*

[5] *Power input fuse mounted in clip and accessible by removing front of module.*

2.6.5 CPU Installation

To install the CPU:

1. Make sure that rack power is off.
2. Install the CPU module in the appropriate slot (refer to Universal Backplane Slot Occupancy Rules.) With the exception of CPE302/CPE305, the CPU occupies two slots and can use any slots except the highest numbered (rightmost) slot. CPE302/CPE305 occupies one slot.
3. Turn on the power. When the CPU has successfully completed initialization, the OK LED stays on and the RUN and EN LEDs are off. The CPU is now ready to be programmed.
4. For CPUs with battery back-up, connect the battery to either of the battery connectors on Module. (You can connect the battery at any step in the installation process, but it will begin to drain immediately unless power is applied. To maximize battery life, install it after power has been turned on).
5. For CPUs backed up by an Energy Pack, follow the installation instructions for the specific Energy Pack.
6. Where appropriate, communications cables can be secured to the tie-downs on the bottom of Module.

Figure 46: CPE330 (example of 2-Slot CPU)

After the program has been verified, the mode switch can be moved to the appropriate operation mode position: RUN I/O ENABLED, RUN OUTPUT DISABLE, or STOP. The LEDs indicate the position of the mode switch and the status of serial port activity.

⚠ CAUTION

CPUs may NOT be hot-inserted in the backplane; power must be removed before installing or removing the CPU.

2.6.6 Power Supplies

To install the power supplies

1. Install the Power Supply module(s) in the appropriate slot(s).
   a) Universal Power Supplies (IC695) can be installed in any slot except the highest numbered (rightmost) slot in a Universal Backplane.
   b) Expansion Power Supplies (IC694) must be installed in the Power Supply (leftmost) slot in an Expansion Backplane.
   c) Where multiple power supplies are to be used, refer to Section 2.6.1, *Power Supply Models and Slot Occupancy*)
2. Connect wiring to the Power Supply per the installation instructions for that specific power supply.
3. Use the three wiring tie-downs on the bottom of Module to secure the power and ground wires after installation.

Figure 47: Typical RX3i Power Supply Module

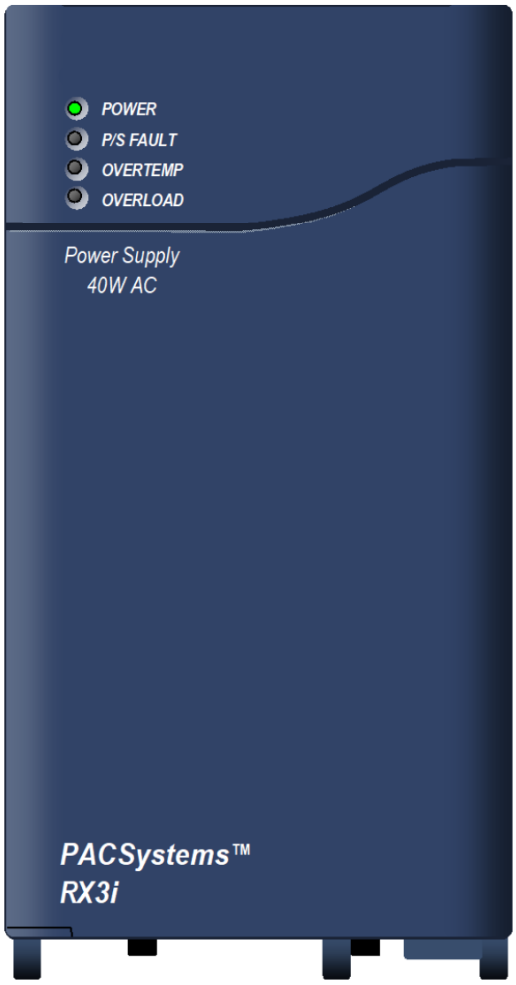

⚠ WARNING

For all Power Supplies, if the same input power source is used to provide power to two or more power supplies in the system, connection polarity must be identical at each power

supply. A resulting difference in potential can injure personnel or cause damage to equipment. Also, each backplane must be connected to a common system ground.

Power Supply Field Wiring

- For IC695 Power Supplies, each terminal accepts one AWG #14 to AWG #22 wire. Figure 48 (below) is a cross-section of one of the terminals on an IC695 Power Supply. The end of each wire should be stripped at least 3/8 in (9 mm). The terminal can accept a wire that is stripped up to 11 mm (.433 in) while providing full seating for the insulator. The wire must be fully inserted into the terminal block as illustrated in Figure 48 at left so that the insulation meets the insulation stop position inside the terminal. Tightening the terminal screw pivots the clamp firmly against the stripped end of the wire, holding it in place. If the wire is not fully inserted, as shown on the right, tightening the clamp may push the wire upward so that it is not connected.

Figure 48: Correct Wiring Practice for Power Supply Input Terminals

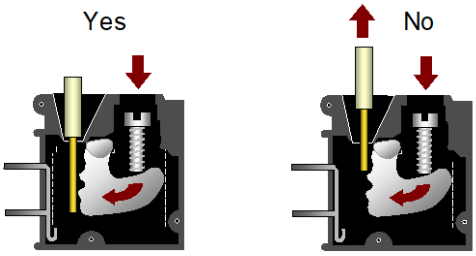

- For IC694 Power Supplies, each terminal accepts one AWG #14 (2.1 mm^2) or two AWG #16 (1.3 mm^2) copper 75°C (167°F) wires. The suggested torque for the Power Supply terminals is 1.36 Nm (12 in-lb.). Each terminal can accept solid or stranded wires. Multiple wires in the same terminal should be of the same type (solid or stranded) and size.

Figure 49: IC695 Power Supply Terminals

Figure 50: IC694 Power Supply Terminals

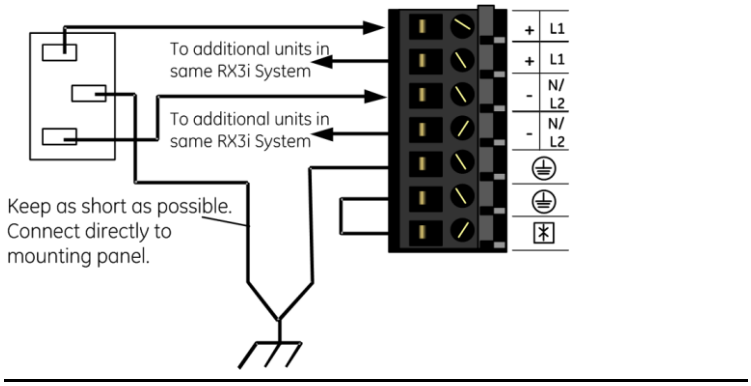

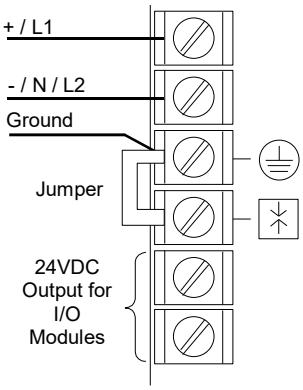

- For Expansion (IC694) Power Supplies only, the bottom terminals provide access to the Isolated +24 Vdc output of the Expansion Backplane, which can be used to power input circuits for certain IC694 modules. Refer to the table in Section 4.2, Module Load Requirements for information.

⚠ CAUTION

If the Isolated 24 Vdc supply is overloaded or shorted, the PLC will stop operation.

AC Power Source Connections

Connect the hot and neutral wires or lines L1 and L2 to the appropriate Power Supply terminals.

DC Power Source Connections

All RX3i Power Supplies have DC input capabilities. Connect the **+** and **-** wires from the DC source to the appropriate terminals. These connections are polarity-sensitive DC-only supplies.

Ground Connection

Connect the safety ground wire to the terminal marked with a ground symbol.

External Overvoltage Protection

The Ground and MOV terminals on a Power Supply module are normally connected to frame ground with a user-installed jumper (as shown in Figure 51). If overvoltage protection is not required or is supplied upstream, no jumper is needed.

In systems with a floating neutral input (the neutral line is not referenced to Protective Earth Ground), this jumper must NOT be installed. Also, in a floating neutral system, voltage surge protection devices such as MOVs **must** be installed from L1 to earth ground, and from L2 (Neutral) to earth ground.

Figure 51: External Overvoltage Protection

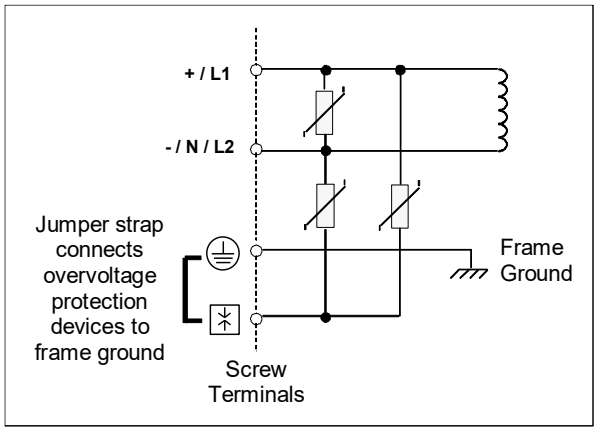

AC Power Supply Connections for Floating Neutral (IT) Systems

If an AC input power supply is installed in a system where the Neutral line is not referenced to Protective Earth Ground, special installation instructions must be followed to prevent damage to the power supply.

A *Floating Neutral System* is a system of power distribution wiring where Neutral and Protective Earth Ground are not tied together by negligible impedance. In Europe, this is referred to as an IT system (refer to IEC950). In a *Floating Neutral System*, voltages measured from input terminals to protective earth ground may exceed the 264 Vac maximum input voltage power supply specification.

Figure 52: Floating Neutral

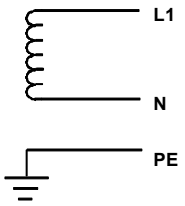

AC Power Supply Connections for Non-Floating Neutral System

Systems, where one leg of the power distribution wiring is tied to Protective Earth or a tap between two legs of the power distribution

wiring, is tied to Protective Earth are not *Floating Neutral Systems*. Non-floating neutral systems **do not** require special installation procedures.

Figure 53: Neutral Not Floating (Tied to Ground)

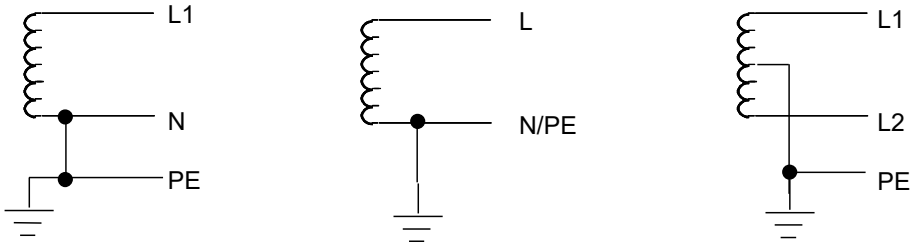

Instructions for Floating Neutral Systems

1. The input power terminals should be wired as shown in Figure 48 through Figure 50 above.

2. No jumper may be installed jumper between terminals 3 and 4 of the Power Supply module.

3. Voltage surge protection devices such as MOVs must be installed:
    - From L1 to earth ground
    - From L2 (Neutral) to earth ground

The voltage surge devices must be rated such that the system is protected from power line transients that exceed *Line voltage + 100 Vac +* $(N\text{-}PE)_{MAX.}$ The expression *N-PE* refers to the voltage potential between neutral and Protective Earth (PE) ground.

For example, in a 240 V AC system with neutral floating 50 Vac above earth ground, the transient protection should be rated at 240 Vac + 100 Vac + 50 Vac= 390 Vac

2.6.7 Serial Bus Transmitter Module

The RX3i Serial Bus Transmitter Module, IC695LRE001, provides communications between a PACSystems RX3i Universal Backplane (IC695-model number), and serial expansion, and remote backplanes (IC694- or IC693-model numbers). It must reside in the expansion connector on the right end of a Universal Backplane.

Module Installation

This module may NOT be hot-inserted in the backplane; power must be removed before installing or removing the Bus Transmitter Module.

Insert the Serial Bus Transmitter Module straight into its slot as displayed in Figure 55 below. This module does not have the same pivoting and latching mechanisms as other RX3i modules.

Tighten the two captive screws in the corners of Module. Recommended torque is 0.5 Nm (4.4 in-lb.) maximum.

Figure 54: LRE001 Front View

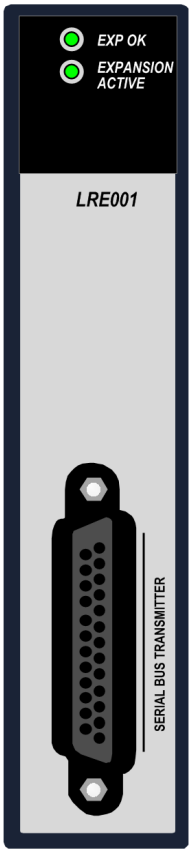

Figure 55: LRE001 Attachment Using Captive Screws

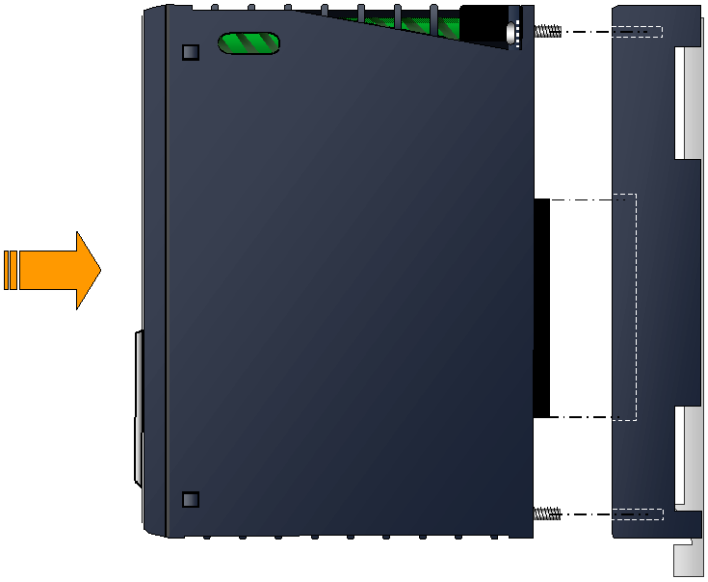

Expansion Cable Installation

Subsequent backplanes in the system are linked by expansion cables as described in Section 5:. The expansion cable may not be attached or removed while the expansion rack has power applied.

Section 3: Backplanes

This section describes the types of the backplane that can be included in an RX3i system:

Backplane Type	Catalog Number	Section
7-Slot RX3i Universal Backplane	IC695CHS007	3.1
12-Slot RX3i Universal Backplane	IC695CHS012	3.1
16-Slot RX3i Universal Backplane	IC695CHS016	3.1
5-Slot RX3i Serial Expansion Backplane	IC694CHS398	3.2
10-Slot RX3i Serial Expansion Backplane	IC694CHS392	3.2
5-Slot Series 90-30 Expansion Backplane	IC693CHS398[6]	
10-Slot Series 90-30 Expansion Backplane	IC693CHS392[6]	
5-Slot Series 90-30 Remote Backplane	IC693CHS399[6]	
10-Slot Series 90-30 Remote Backplane	IC693CHS393[6]	

[6] *For information about the IC693 Series 90-30 Expansion and Remote Backplanes, refer to the Series 90-30 PLC Installation Manual, GFK-0356.*

3.1 RX3i Universal Backplanes: IC695CHS007, IC695CHS012, IC695CHS016

Six Universal Backplanes are available for RX3i PACSystems:

Dual-Bus Part Numbers	PCI-Exclusive Part Numbers
7-slot IC695CHS007	7-slot IC695CHS007PCIONLY
12-slot IC695CHS012	12-slot IC695CHS012PCIONLY
16-slot IC695CHS016	16-slot IC695CHS016PCIONLY

Figure 56: 12-Slot RX3i Universal Backplane IC695CHS012

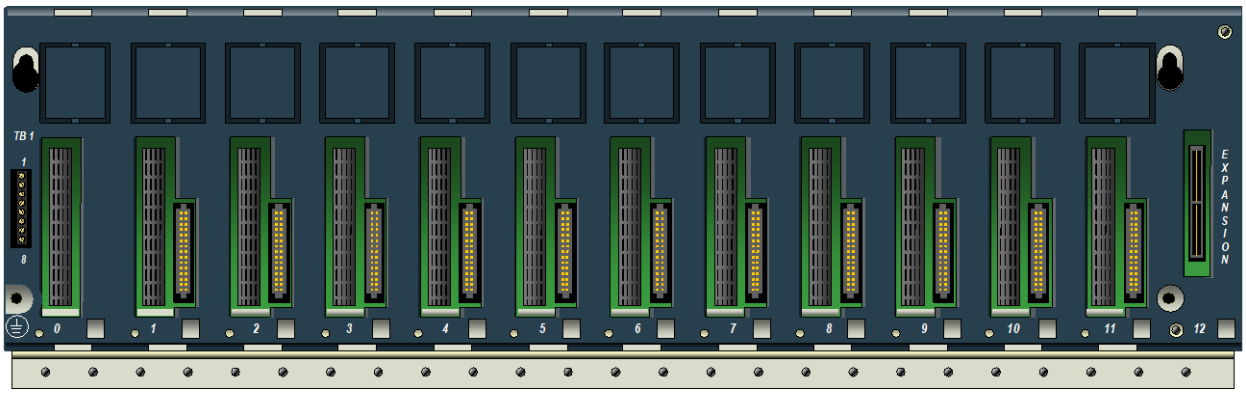

The RX3i Universal Backplane supports both PCI (IC695) and serial (IC694) I/O and option modules with its dual-bus backplane. The RX3i Universal Backplane also supports 90-30 IO and option modules.

RX3i modules (IC695 catalog numbers) communicate over the backplane PCI bus.

RX3i modules (IC694 catalog numbers) and Series 90-30 modules (IC693) communicate over the backplane serial bus.

3.1.1 Dual-Bus Backplane

The dual-bus RX3i Universal Backplane supports both PCI (IC695) and serial (IC694) I/O and option modules with its dual-bus backplane. The RX3i Universal Backplane also supports 90-30 IO and option modules.

RX3i modules (IC695 catalog numbers) communicate over the backplane PCI bus.

RX3i modules (IC694 catalog numbers) and Series 90-30 modules (IC693) communicate over the backplane serial bus.

3.1.2 PCI-Only Backplane

The PACSystems RX3i 7-slot, 12-slot, and 16-slot Universal Backplanes are also available as PCI-exclusive variations (IC695CHS007PCIONLY, IC695CHS012PCIONLY, IC695CHS016PCIONLY). The PCI-exclusive version of this backplane supports only IC695 modules. Visually, customers can identify the difference between the two models by the absence of the Serial Bus connector, which is located next to the PCI Bus connector on the dual-bus backplane

3.1.3 RX3i Universal Backplane Features

Figure 57: Features of RX3i Universal Backplanes

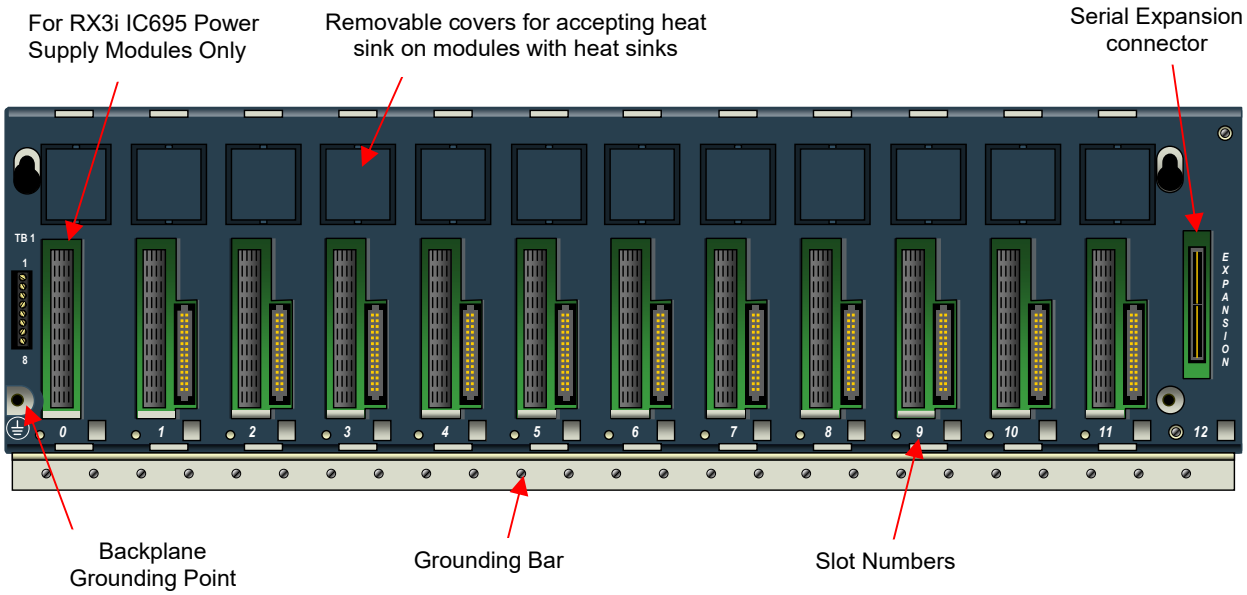

RX3i Universal Backplane features include:

- Terminal Strip on the left (Figure 57) for Isolated +24 Vdc input.
- Backplane grounding point as described in Section 2.5.2.
- An integral grounding bar for connecting module/shield grounds as described in Section 2.5.5.
- Removable covers that, when knocked out, allow heat sinks on modules equipped with heat sinks to be inserted.
- Serial Expansion connector for connection (Figure 57, far right) to Serial Expansion and Remote Backplanes (12- and 16-slot models only).
- Slot numbers are printed on the backplane (Figure 57) and are used for reference for configuration in PAC Machine Edition (PME). Slots and connectors are described on the following pages. Most modules occupy one slot. AC power supplies and some CPU models may occupy two slots.

Universal Backplane TB1 Input Terminals

The RX3i IC695 Power Supplies do not provide Isolated +24 Vdc output power over the backplane. Terminals 7 and 8 can be used to connect an optional external source of Isolated +24 Vdc, which is required for some IC693 and IC694 modules as listed in the table in Section 4.2, Module Load Requirements.

These terminals accept individual wires from 14 to 22 AWG.

If modules that require Isolated +24 Vdc are installed in an Expansion Backplane instead, an external Isolated +24 Vdc power supply is not required.

Terminals 1 through 6 are not used.

Figure 58: TB1 Terminal Detail

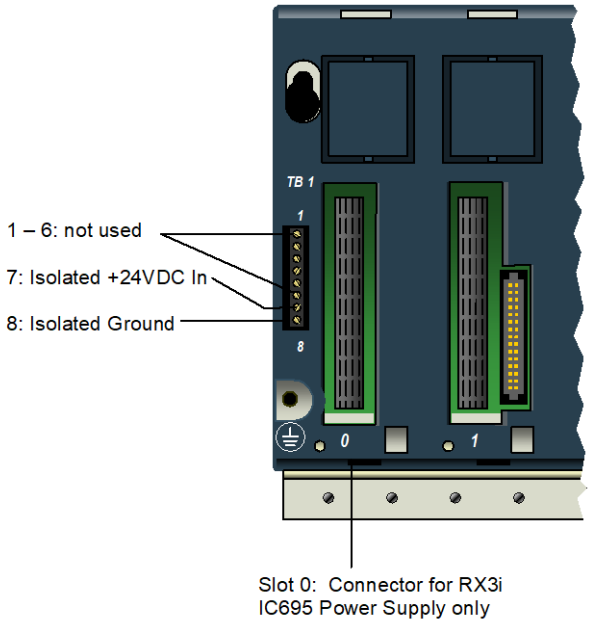

Slot 0

The leftmost slot in a Universal Backplane is slot 0. Only the backplane connector of IC695 Power Supplies can be installed in slot 0 (note: IC695 Power Supplies can be installed in any slot). However, 2-slot wide modules that have right-justified connectors, such as the CPU310, can be plugged into slot 1and also cover slot 0.

The CPU is referenced for configuration and application logic by the leftmost slot occupied by the entire module, not by the slot the physical connector is located in. For example, if the CPU has its physical connector inserted in slot 3, Module occupies slots 2 and 3 and the CPU is referenced as being located in slot 2. A double-wide CPU may therefore be located in slot 0 with its backplane connector inserted in slot 1.

Dual-Connector Slots

Dual-connector slots are identified as follows:

CHS016: 0 through 15

CHS012: 0 through 11

CHS007: 0 through 5

They have two connectors, a connector for the RX3i PCI bus, and a connector for the RX3i serial bus. Each of these slots can accept any type of compatible module: IC695 Power Supply, IC695 CPU, or IC695, IC694, and IC693 I/O or option modules.

Provided the *Hot Insertion and Removal* procedure described in Section 2.6.4 is carefully followed, I/O and option modules in a Universal Backplane may be removed and replaced without powering down.

Note: The connector for the Serial Bus is not available on the PCI-Exclusive version of the Universal Backplane.

Figure 59: RX3i Universal Backplane Dual Connector Slot for PCI Bus & Serial Bus

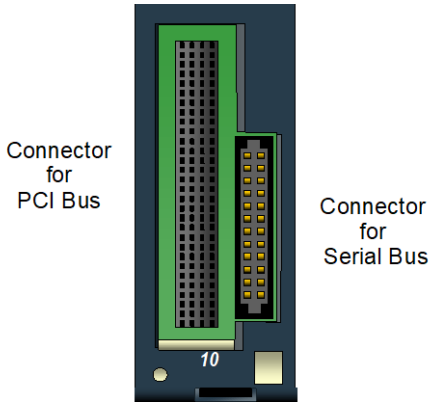

Expansion Slot (Slot 12 or Slot 16)

The rightmost slot in a Universal Backplane has a different connector than the other slots. It can only be used for an RX3i Serial Expansion Module, IC695LRE001.

An RX3i 2-slot module may not occupy this expansion slot.

The 7-slot CHS007 rack does not provide an expansion slot or support the LRE001 Serial Expansion Module.

Figure 60: Expansion Slot Connector is shown at Slot 12

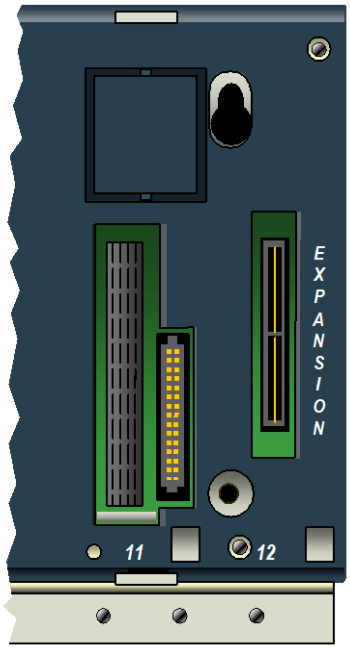

Slot 6 of 7-Slot Rack

In the CHS007 seven-slot rack, slot 6 has one RX3i PCI connector and can accept only IC695 single-width I/O or option modules.

Figure 61: Slot 6 of IC695CHS007

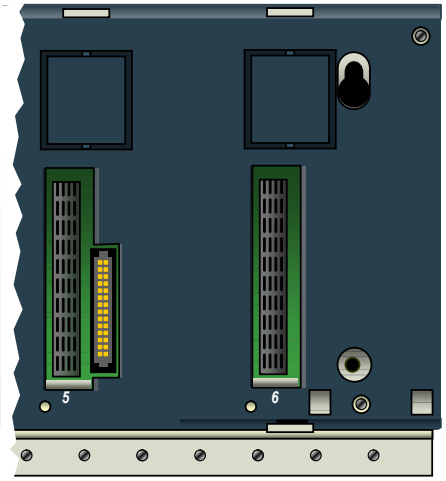

3.1.4 Module Locations in a 12- or 16-Slot Universal Backplane

- IC695 Power Supply modules may be installed in any slot. DC Power Supplies IC695PSDx40 and IC695PSD180 occupy one slot and AC Power Supplies IC695PSAx40 occupy two slots. RX3i (IC694) and Series 90-30 (IC693) Power Supplies cannot be installed in Universal Backplanes.
- An RX3i CPU module can be installed anywhere in the backplane except the Expansion slot. A 2-slot CPU cannot be installed in the -Expansion slot in the backplane.
- I/O and option modules can be installed in any available slot except slot 0, which can only accept IC695 Power Supplies, and the Expansion slot. Each I/O slot has two connectors, so either an RX3i PCI-based module or a serial module can be installed in any I/O slot.
- The rightmost slot is the expansion slot. It can only be used for optional serial expansion module IC695LRE001. Refer to Chapter 5 for information about the LRE001 Serial Expansion Module and expansion cables.

Figure 62: Configured as CPU in Slot 0, Power Supply in Slot 2

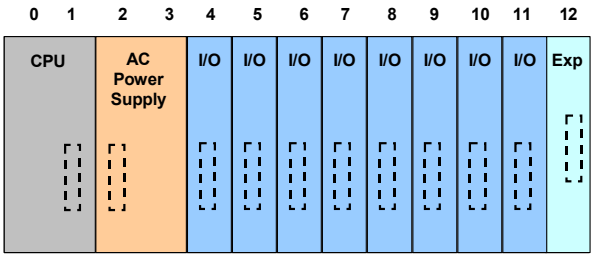

Figure 63: Invalid: AC Power Supply cannot be in Slot 11

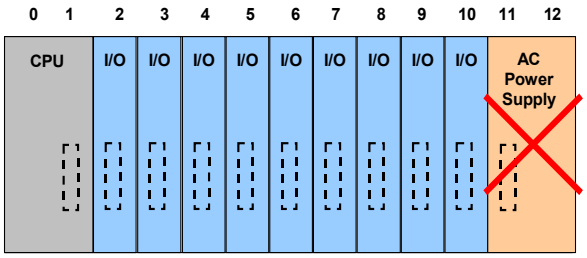

Figure 64: Configured as CPU in slot 0, Power Supply in Slot 6

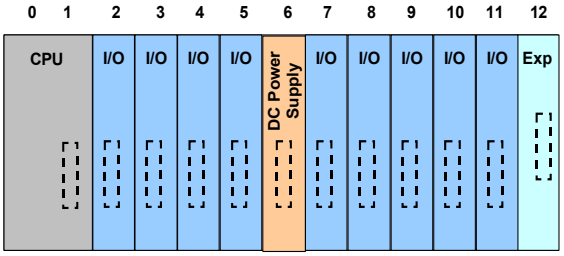

Figure 65: Invalid: CPU cannot be configured in Slot 11

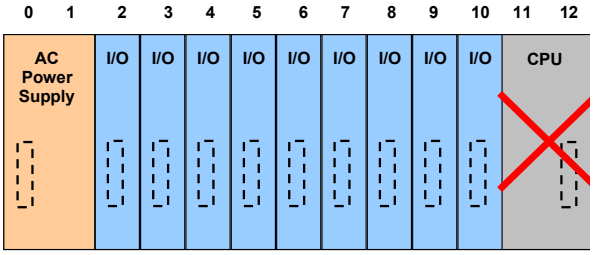

Figure 66: Configured as Power Supply in Slot 0, CPU in Slot 1

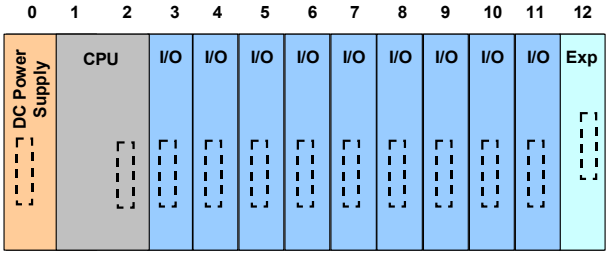

Figure 67: Invalid: Only a Power Supply can be installed in Slot 0

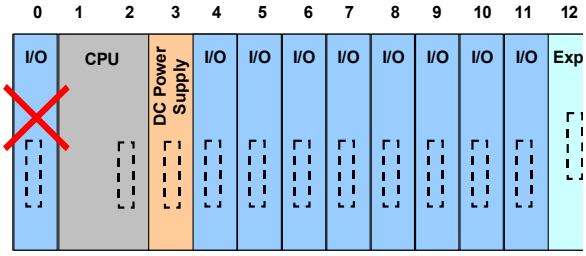

Locating the CPU in Slot 1

Whenever the CPU is installed in slot 1, only a single-wide power supply may be used in slot 0. Either DC power supply can be used (IC695PSD040, IC695PSD140, or IC695PSD180). If for a given application, the CPU must be located in slot 1, and also uses an AC power supply, the RX3i AC power-supply must then be located in the slot to the right of that CPU.

Locating the CPU in a Slot Other than 1

Before deciding to place the CPU in a slot other than slot 1, it is important to consider possible issues that could arise as follows.

Communications: For Service Request #15 (Read Last-Logged Fault Table Entry) and Service Request #20 (Read Fault Tables), the location of CPU faults is not the standard 0.1 location, but the slot the CPU is located in. The logic that decodes fault table entries retrieved by these service requests may need updating.

COMMREQs directed to the CPU (e.g. those directed to the serial ports of the CPU) will need to be updated with the correct CPU slot reference.

Hardware Configuration: The slot location of the CPU must be updated in the hardware configuration to reflect the true location of the CPU.

Fault Tables: Faults logged for the CPU in the fault table will reflect the actual slot of the CPU.

Remote Series 90 PLCs that use SRTP Channels COMMREQs expect the CPU to be in slot 1 or slot 2. To support communications with Series 90 SRTP clients such as Series 90 PLCs using SRTP Channels, the RX3i internally redirects incoming SRTP requests destined for {backplane 0, slot 1} to {backplane 0, slot 2}, provided that the CPU is located in backplane 0 slot 2 (and the remote client has not issued an SRTP Destination service on the connection to discover the backplane and slot of the CPU). This special redirection permits Series 90-30 applications that expect the power supply to be located leftmost and the CPU to be located to the right of the power supply to function. Attempts to establish channels with CPUs in slots other than 1 or 2 will fail if initiated from Series 90 PLCs.

All external communication devices that interact with the CPU should be checked for compatibility with CPU slot locations other than slot 1. Problems may arise with but are not limited to, initial connection sequences and fault reporting. Machine Edition View users should select *SRTP* as their communications driver as it can communicate with a CPU in any slot.

3.1.5 Module Locations in a 7-Slot Universal Backplane

- DC Power Supplies IC695PSDx40 and IC965PSD180 occupy one slot and can be installed in any slot. AC Power Supplies IC695PSAx40 occupy two slots and cannot be installed in slot 6. *IC694 and IC693 Power Supplies cannot be installed in Universal Backplanes.*
- Any I/O or option module can be installed in slots 1 through 5, which have two connectors and can accommodate either an RX3i PCI-based module or a serial module. Slot 6 can accommodate only RX3i PCI-based single-wide modules. I/O and option modules cannot be installed in slot 0, which can only accept IC695 Power Supplies.
- An RX3i CPU can be installed anywhere in the backplane. A 2-slot CPU cannot be installed in slot 6. CPU modules occupy two slots. Installing the CPU in slot 1 means only a single-wide power supply can be used in slot 0. If the application must maintain a slot 1 CPU and use an AC power supply, the AC power supply must be located in a slot to the right of the RX3i CPU in slot 1. Before deciding to place the CPU in a slot other than slot 1, it is important to consider the factors listed in the section, *Locating the CPU in a Slot Other than 1*.

Allowed

Figure 68: Configured as CPU in Slot 0, Power Supply in Slot 2

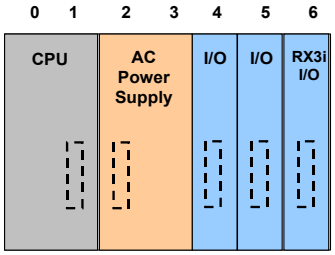

Not Allowed

Figure 69: CPU cannot be configured in Slot 6

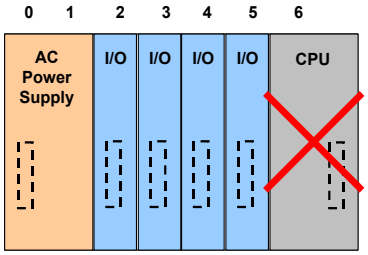

Figure 70: Configured as CPU in Slot 0, Power Supply in Slot 5

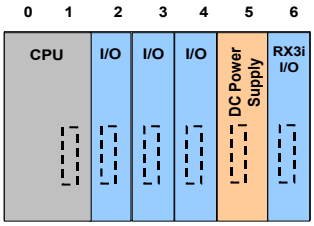

Figure 71: I/O or Option Module cannot be installed in Slot 0

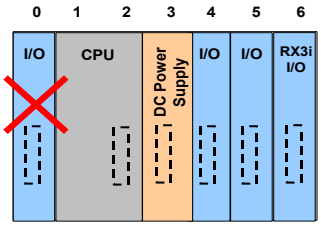

Figure 72: Configured as Power Supply in Slot 0, CPU in Slot 1

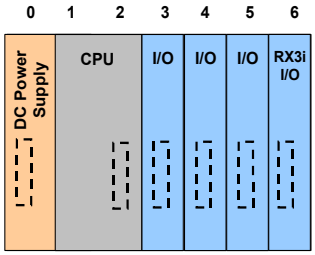

Figure 73: AC Power Supply cannot be configured in Slot 6

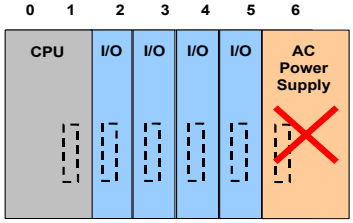

3.2 Serial Expansion Backplanes: IC694CHS392, IC694CHS398

The RX3i system can include any combination of up to seven RX3i Serial Expansion backplane and/or Series 90-30 Expansion/Remote Backplanes. RX3i Serial Expansion Backplanes are available with either five I/O slots (IC694CHS398, displayed in the following figure) or ten I/O slots (IC694CHS392).

Figure 74: Serial Expansion Backplane

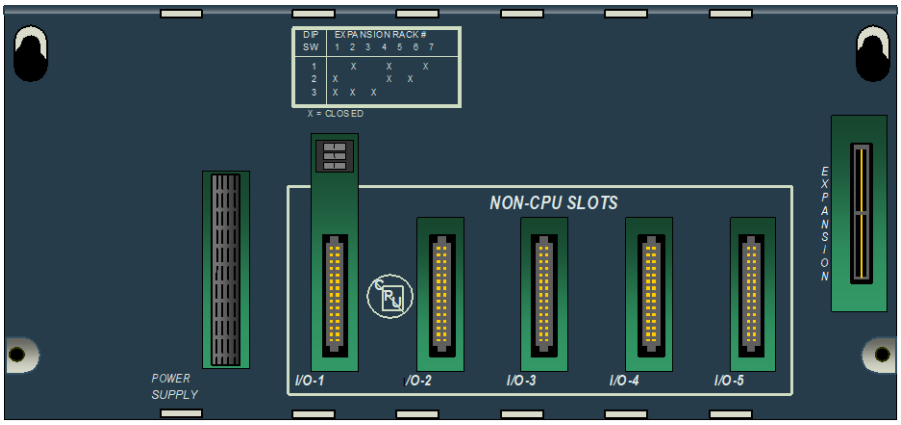

- The leftmost module in an RX3i Serial Expansion Backplane must be a Serial Expansion Power Supply:
  - IC694PWR321: Serial Expansion Power Supply, 120/240 Vac, 125 Vdc
  - IC694PWR330: Serial Expansion Power Supply, 120/240 Vac, 125 Vdc, High Capacity
  - IC694PWR331: Serial Expansion Power Supply, 24 Vdc, High Capacity
- Module Hot Insertion and Removal are NOT permitted on Expansion Backplanes.
- Each Expansion Backplane has a Rack Number Selection DIP switch (Figure 17) that must be set before module installation.
- Each Expansion Backplane has a Bus Expansion connector at its right end for attaching an optional expansion cable. There can be no more than 50 feet (15 m) of cable connecting Expansion backplanes with the Universal Backplane. If the system includes Series 90-30 Remote Backplanes, the additional requirements summarized in Section 1.3 through Section 1.5 must also be observed.

Figure 75: Example RX3i System with Expansion Backplane Racks

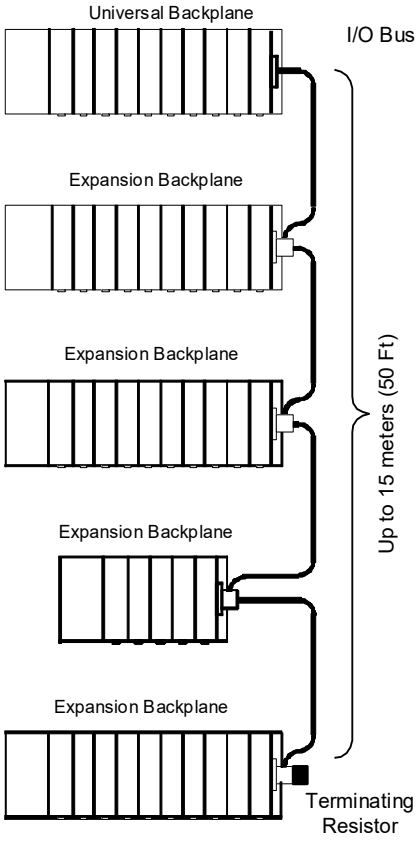

Section 4: Power Supplies

This chapter describes power supplies for RX3i PACSystems:

Power Supply Description	Catalog Number	Section
120/240 Vac 125 Vdc 40 W Power Supply	IC695PSA040	4.4
120/240 Vac 125 Vdc 40 W Multi-Purpose Power Supply	IC695PSA140	4.5
24 Vdc 40 W Power Supply	IC695PSD040	1.1
24 Vdc 40 W Multi-Purpose Power Supply	IC695PSD140	4.7
24 Vdc 80 W Power Supply	IC695PSD180	4.8
120/240 Vac 125 Vdc 30 W Serial Expansion Power Supply	IC694PWR321	4.9
120/240 Vac 125 Vdc 30 W High Capacity Serial Expansion Power Supply	IC694PWR330	4.10
24 Vdc 30 W High Capacity Serial Expansion Power Supply	IC694PWR331	4.11

4.1 Power Supply Overview

This section provides a general description of the IC695 Power Supplies, which must be used in RX3i (IC695) Universal Backplanes, and IC694 Power Supplies, which must be used in RX3i Serial Expansion (IC694) Backplanes. Individual power supply specifications are listed in the following sections.

The IC695 Power Supplies provide up to 40 W each. The IC694 (Expansion) Power Supplies provide up to 30 W each. However, IC694PWR321 is limited to 15 W on the +5 Vdc output.

The total of all outputs combined cannot exceed the stated load capacity in Watts. PME Logic Developer will automatically calculate the power consumption of modules as they are added to the system configuration. Power requirements of system modules are shown in this section, for reference when planning the system.

The maximum load for each type of power supply is displayed in the following table.

Catalog Number	Can be Located In	Nominal Input	Load Capacity[7]	Load Sharing, Redundancy	Max +3.3 Vdc	Max +5 Vdc	Max +24 Vdc Isolated	Max +24 Vdc Relay
IC695PSA040	Universal Backplane	120/240 Vac or 125 Vdc	40 W	No	30 W	30 W	–	40 W
IC695PSA140	Universal Backplane	120/240 Vac or 125 Vdc	40 W	Yes	30 W	30 W	–	40 W
IC695PSD040	Universal Backplane	24 Vdc	40 W	No	30 W	30 W	–	40 W
IC695PSD140	Universal Backplane	24 Vdc	40 W	Yes	30 W	30 W	–	40 W
IC695PSD180	Universal Backplane	24 Vdc	80 W	Yes	60 W	60 W	–	75 W
IC694PWR321	Serial Expansion Backplane	100/240 Vac or 125 Vdc	30 W	No	–	15 W	20 W	15 W
IC694PWR330	Serial Expansion Backplane	100/240 Vac or 125 Vdc	30 W	No	–	30 W	20 W	15 W
IC694PWR331	Serial Expansion Backplane	24 Vdc	30 W	No	–	30 W	20 W	15 W

[7] *A power supply must be able to provide the total of the internal and external loads that may be placed upon it by all the hardware components in the backplane as well as by all the loads that may be connected to the Isolated +24 Vdc supply on an expansion backplane.*

4.1.2 Power Supply Field Wiring

Refer to Section 2.6.6 Power Supplies subheadings *Power Supply Field Wiring, AC Power Source Connections*, and *DC Power Source Connections* as appropriate for how each power supply is being applied.

4.1.3 24 Vdc Isolated Power

The IC695PSAx40 and IC695PSD180 provide isolated 24 Vdc relay power. However, IC695PSDx40 power supplies do not have isolated 24 Vdc relay power and instead pass incoming 24 Vdc straight through to 24 Vdc relay power. In addition, the RX3i Universal Backplane provides external input terminals (TB1) for connecting an optional Isolated +24 Vdc external supply for 24 Vdc isolated power. Modules that draw +24 Vdc from the relay or isolated power rails of the backplane are listed in the table of *Section 4.2, Module Load Requirements* . Refer to *Universal Backplane TB1 Input Terminals* for details on how to wire to terminal TB1.

4.1.4 RX3i IC695 Power Supply Outputs

The IC695 power supplies have +5.1 Vdc, +24 Vdc Relay, and 3.3 Vdc outputs that are connected internally on the backplane. The voltage and power required by modules installed on the backplane are supplied through the backplane connectors.

Figure 76: Outputs of Power Supply IC695PSA040

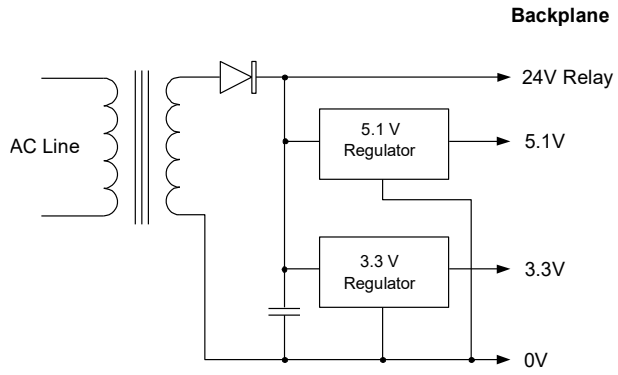

Figure 77: Outputs of Power Supply IC695PSD040 & IC695PSD140

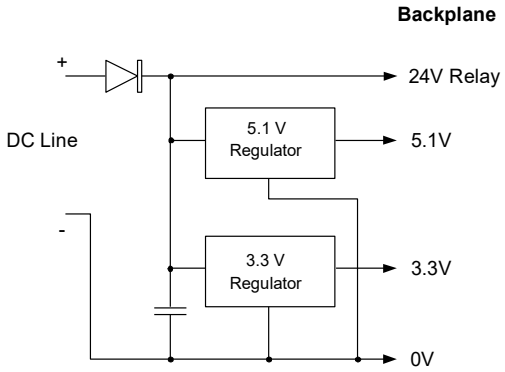

Figure 78: Outputs of Power Supply IC695PSD180

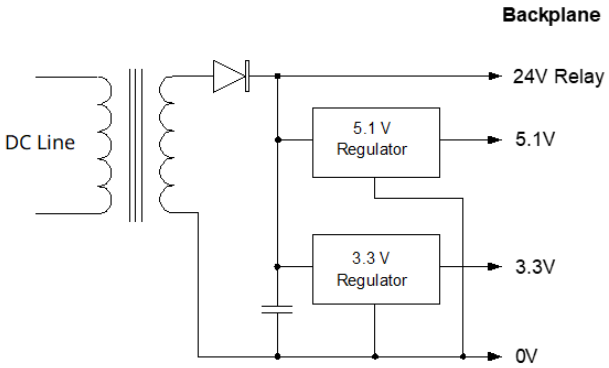

4.1.5 RX3i IC694 Power Supply Outputs

The IC694 power supplies have +5 Vdc, Relay +24 Vdc, and Isolated +24 Vdc outputs that are connected internally on the backplane. The voltage and power required by modules installed on the backplane are supplied through the backplane connectors.

Figure 79: Outputs of Power Supplies IC694PWR321, IC694PWR330, and IC694PWR331

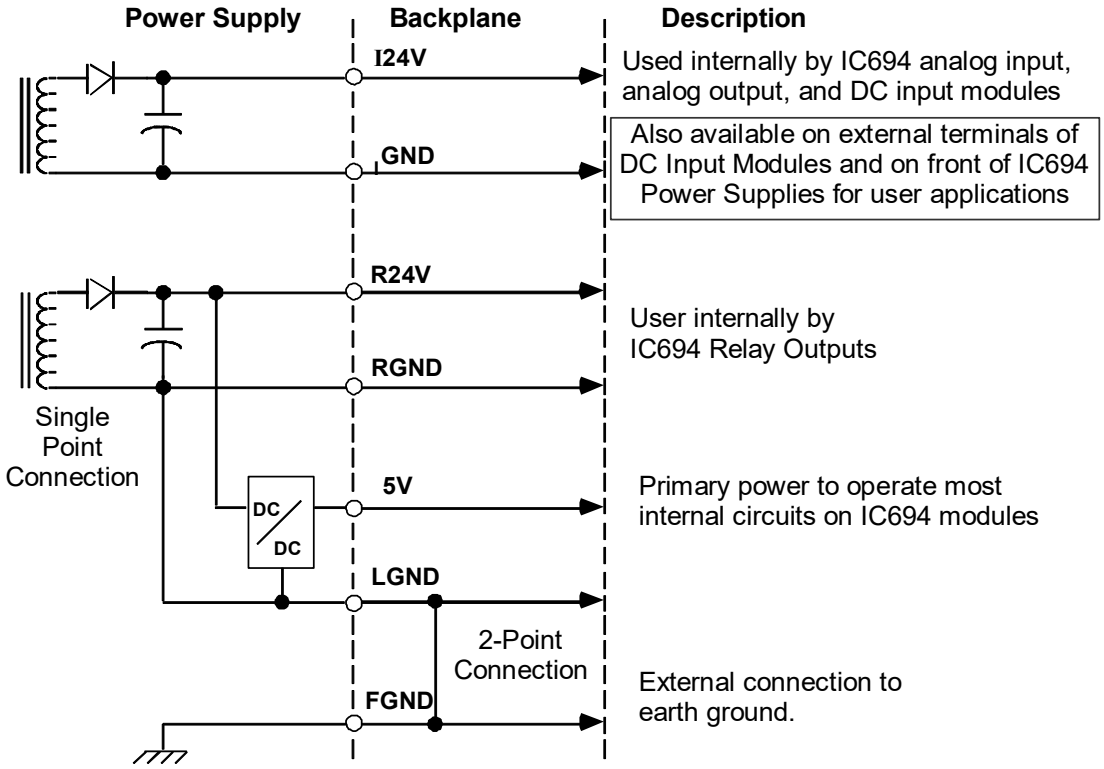

4.2 Module Load Requirements

The following table summarizes the maximum load requirements in milliamps and Watts for RX3i modules. Modules are listed alphabetically by the last six characters of the catalog number. For I/O modules, the actual load may depend on the number of points on at the same time.

Catalog Number	Description	+3.3 Vdc		+5 Vdc		+24 Vdc Relay		+24 Vdc Isolated	
		mA	W	mA	W	mA	W	mA	W
IC694ACC300	Input Simulator	–	–	120	0.60	–	–	–	–
IC694ACC307	Expansion Bus Termination Plug	–	–	72	0.36	–	–	–	–
IC695ALG106	Analog Input Module, 6-Channel Isolated Current/Voltage	390	1.287	225	1.125	–	–	–	–
IC695ALG112	Analog Input Module, 12-Channel Isolated Current/Voltage	370	1.221	425	2.125	–	–	–	–
IC694ALG220	Analog Input, Voltage, 4-Channel	–	–	27	0.135	–	–	98	2.352
IC694ALG221	Analog Input, Current, 4-Channel	–	–	25	0.125	–	–	100	2.4
IC694ALG222	Analog Input, 8-/16-Channel Voltage Version -AA Versions –BA and later	 – –	 – –	 112 112	 0.56 0.56	 – –	 – –	 0 41 110	 0.984 2.64
IC694ALG223	Analog Input, 16-Channel Current	–	–	120	0.60	–	–	65	1.56
IC694ALG232	Advanced Diagnostics, 8/ 16-Channel Input Analog Voltage Module	–	–	112	0.56	–	–	110	2.64
IC694ALG233	Advanced Diagnostics, 16-Channel Input Analog Current Module	–	–	120	0.60	–	–	65	1.56
IC695ALG306	Thermocouple Input Module, 6-Channel Isolated	400	1.320	225	1.125	–	–	–	–
IC695ALG312	Thermocouple Input Module, 12-Channel Isolated	400	1.320	425	2.125	–	–	–	–
IC694ALG390	Analog Output 2-Channel Voltage	–	–	32	0.16	–	–	120	2.88
IC694ALG391	Analog Output 2-Channel Current	–	–	30	0.15	–	–	215	5.16
IC694ALG392	Analog Output 8-Channel Current/Voltage	–	–	110	0.55	–	–	315	7.56
IC694ALG542	Analog Module 4-Input 2-Output Current /Voltage with Advanced Diagnostics	-	-	95	0.475	-	-	150	3.6

Catalog Number	Description	+3.3 Vdc		+5 Vdc		+24 Vdc Relay		+24 Vdc Isolated	
		mA	W	mA	W	mA	W	mA	W
IC695ALG412	Isolated Thermocouple Input Module 12-Channel	400	1.320	425	2.125	–	–	–	–
IC694ALG442	Analog Module 4-Input 2-Output Current/Voltage	–	–	95	0.475	–	–	129	3.096
IC695ALG508	RTD Input Module, 8-Channel Isolated	400	1.320	200	1.00	-	-	-	-
IC695ALG600	Universal Analog Input Module	350	1.155	400	2.00	–	–	–	–
IC695ALG608	Analog Input 8-/4-Channel Current/Voltage	330	1.089	600	3.00	–	–	–	–
IC695ALG616	Analog Input 16-/8-Channel Current/Voltage	450	1.485	600	3.00	–	–	–	–
IC695ALG626	Analog Input 16-/8-Channel Current/Voltage with HART Communications	625	2.063	600	3.00	–	–	–	–
IC695ALG628	Analog Input 8-/4-Channel Current/Voltage with HART Communications	625	2.063	450	2.25	–	–	–	–
IC695ALG704	Analog Output, 4-Channel Current/Voltage	375	1.238	–	–	–	–	150	3.6
IC695ALG708	Analog Output, 8-Channel Current/Voltage	375	1.238	–	–	–	–	250	6
IC695ALG728	Analog Output, 8-Channel Current/Voltage with HART Communications enabled	380	1.255	–	–	–	–	–	–
IC695ALG808	Analog Output 8-Channel Current/Voltage Isolated	450	1.485	25	–	0.138	–	600	14.4
IC694APU300	High-Speed Counter	–	–	250	1.25	–	–	–	–
IC694APU305	Special I/O Processor (360 mA module +10 mA per output on)	–	–	440	2.2	–	–	80	1.92
IC694BEM320	I/O Link Interface Module with Optical Adapter	–	–	205 405	1.025 2.025	–	–	–	–
IC694BEM321	I/O Link Master Module with Optical Adapter	–	–	415 615	2.075 3.075	–	–	–	–
IC694BEM331	Genius Bus Controller Module	–	–	1300	6.50	–	–	–	–
IC695CHS007	Universal Backplane 7-Slot	600	1.98	240	1.20	–	–	–	–
IC695CHS012	Universal Backplane 12-Slot	600	1.98	240	1.20	–	–	–	–
IC695CHS016	Universal Backplane 16-Slot	600	1.98	240	1.20	–	–	–	–

Catalog Number	Description	+3.3 Vdc		+5 Vdc		+24 Vdc Relay		+24 Vdc Isolated	
		mA	W	mA	W	mA	W	mA	W
IC694CHS392	Expansion/Remote Backplane 10-Slot	–	–	150	0.75	–	–	–	–
IC694CHS398	Expansion/Remote Backplane 5-Slot	–	–	170	0.85	–	–	–	–
IC695CMM002	Serial Communications Module, 2 Ports	700	2.310	115	0.508	–	–	–	–
IC695CMM004	Serial Communications Module, 4 Ports	700	2.310	150	0.75	–	–	–	–
IC695CMX128	Control Memory Xchange Module	660	2.178	253	1.27	–	–	–	–
IC695CPE302-Axxx	CPU with 2 MB of user memory and embedded Ethernet	1000	3.300	500[8]	2.50	100[9]	2.4	–	–
IC695CPE305-Axxx	CPU with 5 MB of user memory and embedded Ethernet	1000	3.300	500[8]	2.50	100[9]	2.4	–	–
IC695CPE310-Axxx	CPU with 10 MB of user memory and embedded Ethernet	1000	3.300	500[8]	2.50	100[9]	2.4	–	–
IC695CPE302-Bxxx	Dual Core CPU with 2 MB of user memory and embedded Ethernet Switch	1000	3.300	1500[8]	7.50	100[9]	2.4	–	–
IC695CPE305-Bxxx	Dual Core CPU with 6 MB of user memory and embedded Ethernet Switch	1000	3.300	1500[8]	7.50	100[9]	2.4	–	–
IC695CPE310-Bxxx	Dual Core CPU with 13 MB of user memory and embedded Ethernet Switch	1250	4.125	1500[8]	7.50	100[9]	2.4	–	–
IC695CPE330	Dual Core CPU with 64 MB of user memory and embedded Ethernet/PROFINET	0	0	0	0	750	18	–	–
IC695CPU310	CPU, 10 MB user memory	1250	4.125	1000	5.00	–	–	–	–
IC695CPU315	CPU, 20 MB of user memory	1000	3.300	1200	6.00	–	–	–	–
IC695CPU320	CPU, 64 MB of user memory	1000	3.300	1200	6.00	–	–	–	–
IC695CRU320	Redundancy CPU, 64 MB of user memory	1000	3.300	1200	6.00	–	–	–	–
IC694DNM200	DeviceNet Master Module	–	–	450	2.25	-	-	-	-
IC694DSM314	Motion Controller (+ external encoder, if used)	–	–	800 +500	4.00 +2.50	–	–	–	–

[8] *Greater if USB present at start-up. Refer to GFK-2222AD or later, Section 2.2.*

[9] *Note that the current at power-up is 500mA. 100mA is the steady-state condition.*

Catalog Number	Description	+3.3 Vdc		+5 Vdc		+24 Vdc Relay		+24 Vdc Isolated	
		mA	W	mA	W	mA	W	mA	W
IC694DSM324	Motion Controller (+ external encoder, if used)	–	–	860 +500	4.30 +2.50	–	–	–	–
IC695ETM001	Ethernet Module	840	2.772	614	3.07	–	–	–	–
IC695ECM850	IEC 61850 Ethernet Communication Module	1900	6.270	1100	5.500	-	-	-	-
IC695GCG001	Genius Communications Gateway	N/A	N/A	N/A	N/A	N/A	N/A	N/A	N/A
IC695HSC304	High-Speed Counter Module, 1.5 MHz, 8 inputs, 7 outputs	457	1.51	64	0.32	–	–	–	–
IC695HSC308	High-Speed Counter Module, 1.5 MHz, 16 inputs, 14 outputs	561	1.85	94	0.47	–	–	–	–
IC695LRE001	Expansion Module	–	–	132	1.60	–	–	–	–
IC694MDL230	Input 120 Vac Isolated 8-Pt	–	–	60	0.30	–	–	–	–
IC694MDL231	Input 240 Vac Isolated 8-Pt	–	–	60	0.30	–	–	–	–
IC694MDL240	Input 120 Vac 16-Pt	–	–	90	0.45	–	–	–	–
IC694MDL241	Input 24 Vac/Vdc Pos/Neg Logic 16-Pt	–	–	80	0.40	–	–	125	3.00
IC694MDL250	Input 120 Vac 16-Pt Isolated (all inputs on)	–	–	220	1.10	–	–	–	–
IC694MDL260	Input 120 Vac 32-Pt Isolated (all inputs on)	–	–	220	1.10	–	–	–	–
IC694MDL310	Output 120 Vac 0.5 A 12-Pt (all outputs on)	–	–	210	1.05	–	–	–	–
IC694MDL330	Output 120/240 Vac 0.5 A 16-Pt (all outputs on)	–	–	160	0.80	–	–	–	–
IC694MDL340	Output 120 Vac 0.5 A 16-Pt (all outputs on)	–	–	315	1.575	–	–	–	–
IC694MDL350	Output 120/240 Vac Isolated 16-Pt (all outputs on)	–	–	315	1.575	–	–	–	–
IC694MDL390	Output 120/240 Vac Isolated 2 A 5-Pt (all outputs on)	–	–	110	0.55	–	–	–	–
IC694MDL632	Input 125 Vdc Pos/Neg Logic 8-Pt	–	–	40	0.20	–	–	–	–
IC694MDL634	Input 24 Vdc Pos/Neg Logic 8-Pt	–	–	45	0.225	–	–	62	1.488
IC694MDL635	Input 125 Vdc Pos/Neg, 16-Pt (all inputs on)	–	–	80	0.40	–	–	–	–
IC694MDL645	Input 24 Vdc Pos/Neg Logic 16-Pt	–	–	80	0.40	–	–	125	3.00
IC694MDL646	Input 24 Vdc Pos/Neg Logic FAST 16-Pt	–	–	80	0.40	–	–	125	3.00

Catalog Number	Description	+3.3 Vdc		+5 Vdc		+24 Vdc Relay		+24 Vdc Isolated	
		mA	W	mA	W	mA	W	mA	W
IC694MDL648	Input 48 Vdc 16-Pt Pos/Neg Logic, 1 ms filter	-	-	80	0.40	-	-	-	-
IC694MDL654	Input 5/12 Vdc (TTL) Pos/Neg 32-Pt 195 = (29 mA + 0.5 mA/point ON + 4.7 mA/LED ON) 440 mA (maximum) from +5 V bus on the backplane (if module isolated +5 V supply used to power inputs & all 32 inputs ON)	–	–	195 / 440	0.975 / 2.20	–	–	–	–
IC694MDL655	Input 24 Vdc Pos/Neg 32-Pt (29 mA +0.5 mA/point ON +4.7 mA/LED ON)	–	–	195	0.975	–	–	224 (typ)	5.376
IC694MDL658	Input 48 Vdc 32-Pt Pos/Neg Logic	–	–	195	0.975	–	–	–	–
IC694MDL660	Input 24 Vdc 32-Pt Pos/Neg	–	–	300	1.50	–	–	–	–
IC695MDL664	Input 24 Vdc 16-Pt, Pos Logic	95	0.314	225	1.125	-	-	-	-
IC694MDL730	Output 12/24 Vdc 2 A 8-Pt Pos Logic	-	-	55	0.275	-	-	-	-
IC694MDL732	Output 12/24 Vdc 0.5 A 8-Pt Pos Logic	–	–	50	0.25	–	–	–	–
IC694MDL734	Output 125 Vdc Pos/Neg Logic 6 Pt (all outputs on)	–	–	90	0.45	–	–	–	–
IC694MDL740	Output 12/24 Vdc 0.5 A 16-Pt Pos Logic (all outputs on)	–	–	110	0.55	–	–	–	–
IC694MDL741	Output 12/24 Vdc 0.5 A 16-Pt Neg Logic (all outputs on)	–	–	110	0.55	–	–	–	–
IC694MDL742	Output 12/24 Vdc 1 A 16-Pt Pos Logic ESCP (all outputs on)	–	–	130	0.65	–	–	–	–
IC694MDL752	Output 5/24 Vdc (TTL) 0.5 A 32-Pt Neg Logic (13 mA + 3 mA/point ON + 4.7 mA/LED)	–	–	260	1.30	–	–	–	–
IC694MDL753	Output 12/24 Vdc 0.5 A 32-Pt Pos Logic (13 mA + 3 mA/point ON + 4.7 mA/LED)	–	–	260	1.3	–	–	–	–
IC694MDL754	Output 24 Vdc High-Density 32-Pt (with all outputs on)	–	–	300	1.50	–	–	264	6.336
IC694MDL758	Output 12/24 Vdc 0.5 A 32-Pt Positive Logic with ESCP per group	-	-	250	1.25	-	-	66	1.584
IC695MDL765	Output Module, 24/125 Vdc 16-Pt Pos Logic	152	0.502	540	2.7	-	-	-	-
IC694MDL916	Output 4 A 16-Pt Relay	–	–	300	1.50	150	3.6	-	-

Catalog Number	Description	+3.3 Vdc		+5 Vdc		+24 Vdc Relay		+24 Vdc Isolated	
		mA	W	mA	W	mA	W	mA	W
IC694MDL930	Relay NO 4 A Isolated 8-Pt Output (all outputs on)	–	–	6	0.03	70	1.68	–	–
IC694MDL931	Relay NC and Form C 8 A Isolated 8-Pt Output (all outputs on)	–	–	6	0.03	110	2.64	–	–
IC694MDL940	Relay NO 2 A 16-Pt Output (all outputs on)	–	–	7	0.035	135	3.24	–	–
IC694MDR390	Mixed I/O 24 Vdc Input (8-Pt) N.O. Relay Output (8-Pt)	-	-	80	0.40	70	1.68	-	-
IC695NIU001	Ethernet Network Interface Unit	1250	4.125	1000	5.00	–	–	–	–
IC695NIU001	Ethernet Network Interface Unit Plus (version AAAA and later)	520	1.716	950	4.750	–	–	–	–
IC695PBM300	PROFIBUS Master Module	440	1.452	–	–	–	–	–	–
IC695PBS301	PROFIBUS Slave Module	440	1.452	–	–	–	–	–	–
IC695PMM335	PACMotion Multi-Axis Motion Controller	1010	3.333	440	2.2	-	-	-	-
IC695PNC001-Ax	PROFINET Controller Module (maximum with 2 SFP devices installed, 0.35 A per SFP device)	1200	3.960	1500	7.5	–	–	–	–
IC695PNC001-Bxxx	PROFINET Controller Module (maximum with 2 SFP devices installed, 0.35 A per SFP device)	1200	3.960	750	4.125	–	–	–	–
IC695PNS001-Axxx	PROFINET Scanner Module (maximum with 2 SFP devices installed, 0.35 A per SFP device)	1900	6.270	1100	5.5	-	-	-	-
IC695PNS001-Bxxx	PROFINET Scanner Module (maximum with 2 SFP devices installed, 0.35 A per SFP device)	1300	4.290	700	3.5	-	-	-	-
IC695PNS101	PROFINET Scanner Module RX3i SoE (maximum with 2 SFP devices installed, 0.35 A per SFP device)	1300	4.290	700	3.5	-	-	-	-
IC695PRS015	Pressure Transducer Module	700	2.310	115	0.575	–	–	–	–
IC695RMX128	Redundancy Memory Xchange Module, Multi-Mode Fiber	580	.264	220	1.1	–	–	–	–
IC695RMX228	Redundancy Memory Xchange Module, Single-Mode Fiber	580	.264	220	1.1	–	–	–	–

4.2.1 Power Supply Loading Example

To determine the total load placed on a power supply, add the current requirements of each module and the backplane. The following table provides an example of power supply loading.

Catalog Number	Module	+3.3 Vdc	+5.1 Vdc	+24 Vdc Relay	+24 Vdc Isolated[10]
IC695CPU310	300 MHz CPU 10 Meg memory	1250	1000	–	–
IC695CHS012	Universal Backplane, 12-Slot	600	240	–	–
IC695ETM001	Ethernet Module	840	614	–	–
IC695LRE001	Expansion Module	–	132	–	–
IC694ALG220	Analog Input, Voltage, 4-Ch	–	27	–	98[10]
IC694ALG390	Analog Output 2-Ch Voltage	–	32	–	120[10]
IC694ALG442	Analog Current/Voltage 4-Ch In / 2-Ch Out	–	95	–	-
IC694APU300	High-Speed Counter	–	250	–	4000[10]
IC694MDL340	120 Vac 0.5 A 16-Pt Output	–	315	–	–
IC694MDL230	120 Vac Isolated, 8-Pt Input	–	60	–	–
IC694MDL240	120 Vac 16-Pt Input	–	90	–	–
IC694MDL930	Relay NO 4 A Isolated 8-Pt Output (all outputs on)	–	6	70	–
IC694MDL931	Relay NC and Form C 8 A Isolated 8-Pt Output (all outputs on)	–	6	110	–
	Total Amps	2.690	2.867	0.180	–
	Converted to Watts	(x3.3 V)	(x5.1 V)	(x24 V)	–
	Power Consumption from Power Supply	=8.877 W	=14.622 W	=4.32 W	–
Total Power Consumption from Power Supply		8.877 + 14.622 + 4.32 = 27.817 W			

At ambient temperatures, up to 32°C, power supply IC695PSA040 provides the following power outputs:

- 40 W maximum total
- 5.1 Vdc = 30 W maximum
- 3.3 Vdc = 30 W maximum

[10] *Because the IC695 power supply does not provide +24 Vdc Isolated power, an external +24 Vdc supply, wired via terminal TB1 on the Universal Backplane, is required for modules ALG220, ALG221, ALG222, and APU300.*

In this example, all of Module power requirements are met by Power Supply PSA040.

4.2.2 Load Sharing / Redundancy

To meet the power needs of the application, as many as four multi-purpose power supplies can be installed in a Universal Backplane. These power supplies can be combined to provide:

- Load Sharing
- Power Supply Module Redundancy
- Power Source Redundancy

No other types of RX3i power supply can be included in these applications.

Load Sharing

Multi-purpose power supplies can be combined into load sharing applications. The following rules must be observed:

If multiple power supplies are required to meet the system load requirements, Multi-purpose power supplies must be wired to the same power source in such a way that they all can be powered up or powered down simultaneously. The On/Off switch on the front panel of each of the power supplies must be left in the On position.

⚠ CAUTION

In a load-sharing application, it is important to ensure that the load-sharing power supply modules' On/Off switches cannot be inadvertently used. The minimum number of power supplies needed to meet the system power requirements MUST have their switches always kept in the On position. Also, the load-sharing power supplies must be connected to the system power source through the same external switch. The system must be powered up and powered down only from the external switch. If individual power supplies are powered up or powered down using their On/Off switches *or separate external switches*, resulting in insufficient power capacity, equipment damage may result. It may be necessary to re-load the PLC operating system to resume operation.

Connections for Load Sharing

In load-sharing installations, additional multi-purpose power supplies above the minimum required for the system load may be wired to the same power source, or a different source.

Figure 80: Power Supply Connections for Load Sharing

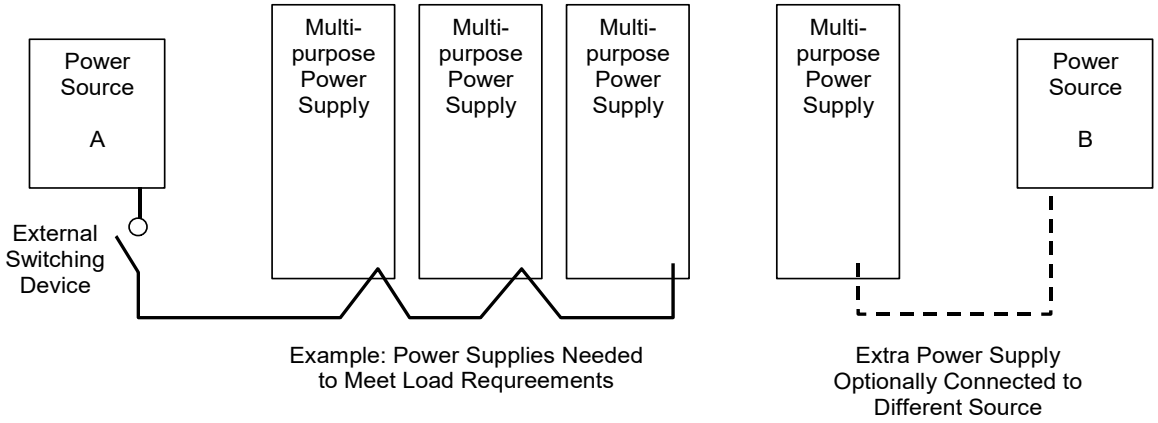

Connections for Power Supply Module Redundancy

Power supply module redundancy can be provided by using one additional multi-purpose power supply above the minimum required for the system power load (Figure 81). In this type of installation, all Multi-purpose power supplies contribute a share of the backplane power and run at a correspondingly reduced load. This results in longer life for the individual power supplies. Also, should one power supply module fail, system operation is not interrupted. The front panel switch can be used to remove a redundant unit. Note that this type of system does not protect against loss of the input power source. If more than one power supply is switched off, the remaining power supplies may become overloaded and shut down. An External switching device must be used to remove power from more than one power supply at a time in the Power Supply Redundancy mode.

Figure 81: Redundant Power Supply Connections

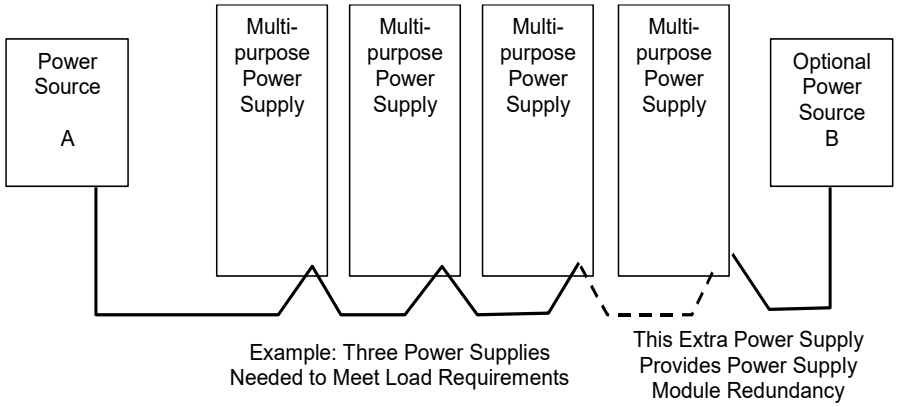

Power Source Redundancy

If the overall power needs of the system can be met using either one or two Multi-purpose power supplies, then power source redundancy can be provided. This requires using twice the minimum number of Multi-purpose power supplies required to meet the system load requirements. In this type of system, half of the Multi-purpose power supplies must be connected to one power source and the other half must be connected to a separate source. This arrangement provides all the advantages of a Basic Redundancy system, as described above, plus power source redundancy. The front panel switch may be used to remove an individual power supply as long as the minimum number of units remains powered up.

Figure 82: Connections for Power Source Redundancy

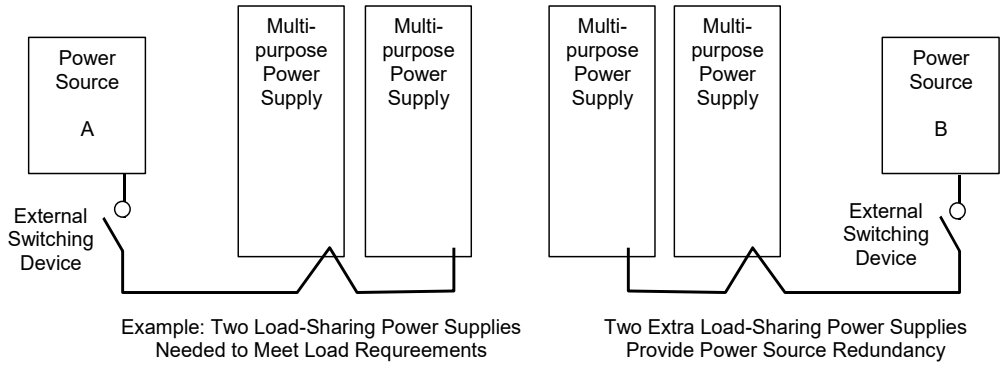

4.3 AC Power Supply Connections for Floating Neutral (IT) Systems

If an AC input power supply is installed in a system where the Neutral line is not referenced to Protective Earth Ground, special installation instructions must be followed to prevent damage to the power supply.

A *Floating Neutral System* is a system of power distribution wiring where Neutral and Protective Earth Ground are not tied together by negligible impedance. In Europe, this is referred to as an IT system (refer to IEC950). In a *Floating Neutral System*, voltages measured from input terminals to protective earth ground may exceed the 264Vac maximum input voltage power supply specification.

Figure 83: Floating Neutral

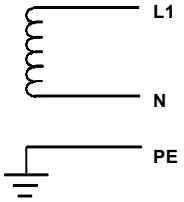

4.3.1 Special Instructions for Floating Neutral Systems

The input power terminals should be wired according to the instructions under Section 2.6.6, *Power Supply Field Wiring* with the following exceptions.

1. For IC695 power supplies, no jumper may be installed between terminal 5 or 6 and terminal 7.
2. For IC694 and IC693 power supplies, no jumper may be installed between terminals 3 and 4 of the power supply module.
3. Voltage surge protection devices such as MOVs must be installed:
   - From L1 to earth ground
   - From L2 (Neutral) to earth ground

The voltage surge devices must be rated such that the system is protected from power line transients that exceed *Line voltage + 100 V + $(N\text{-}PE)_{MAX.}$* The expression *N-PE* refers to the voltage potential between neutral and Protective Earth (PE) ground. For example, in a 240 Vac system with neutral floating 50 Vac above earth ground, the transient protection should be rated at:

240 Vac + 100 Vac + 50 Vac = 390 Vac

4.3.3 Non-Floating Neutral System

Systems, where one leg of the power distribution wiring is tied to Protective Earth or a tap between two legs of the power distribution wiring, is tied to Protective Earth are not *Floating Neutral Systems*. Non-floating neutral systems **do not** require special installation procedures.

Figure 84: Non-Floating Neutral Wiring

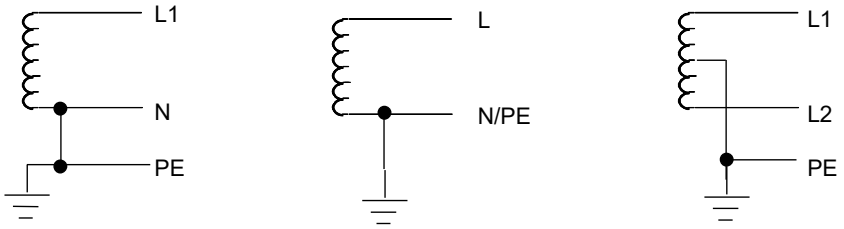

4.4 Power Supply, 120/240 Vac or 125 Vdc, 40 W: IC695PSA040

Power Supply IC695PSA040 is a 40 W supply that operates from an input voltage source in the range of 85 to 264 Vac or 100 Vdc to 300 Vdc.

This power supply provides three outputs:

- +5.1 Vdc output,
- +24 Vdc relay output that can be used to power circuits on Output Relay modules.
- +3.3 Vdc. This output is used internally by RX3i modules with IC695 catalog numbers.

⚠ CAUTION

Only one IC695PSA040 can be used in a PACSystems RX3i (IC695 catalog number) Universal Backplane.

This power supply cannot be used with other RX3i power supplies in redundant or increased capacity modes.

Power supply version IC695PSA040C or earlier may cause equipment damage if inadvertently installed in the same backplane as another RX3i power supply.

If the number of modules required exceeds the capacity of the power supply, the additional modules must be installed in Expansion or Remote backplanes.

Figure 85: IC695PSA040

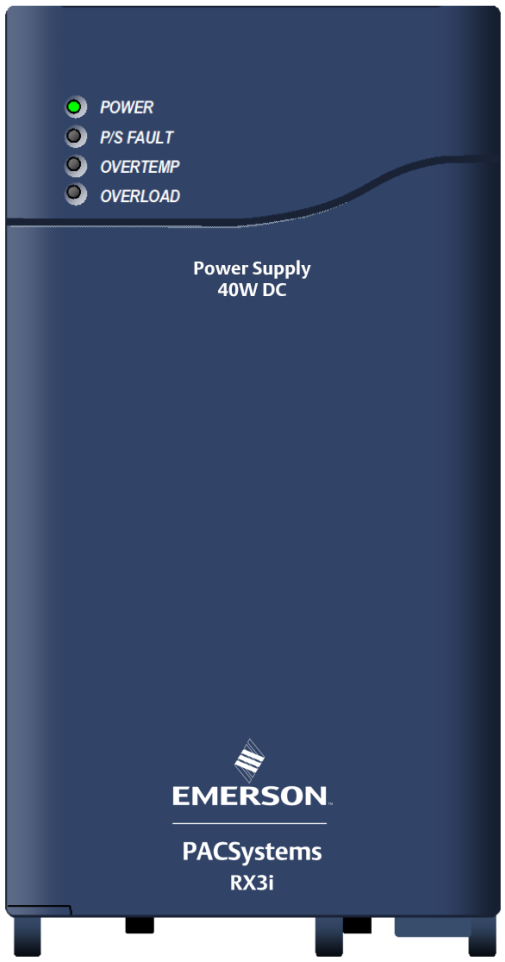

The power supply indicates when an internal fault occurs so the CPU can detect loss of power or log the appropriate fault code.

LEDs

Four LEDs on the power supply indicate:

- Power (Green/Amber). When this LED is green, it indicates power is being supplied to the backplane. When this LED is amber, power is applied to the power supply, but the Power Supply switch is off.
- P/S Fault (Red). When this LED is lit, it indicates the power supply has failed and is no longer supplying sufficient voltage to the backplane.
- Over Temperature (Amber). When this LED is lit, it indicates the power supply is approaching or exceeding its maximum operating temperature.
- Overload (Amber). When this LED is lit, it indicates the power supply is approaching or exceeding its maximum output capability on at least one of its outputs.

The CPU Fault Table shows a fault if any Over-temperature, Overload, or Power Supply fault occurs.

On/Off Switch

The ON/OFF switch is located behind the door on the front of Module. The switch controls the operation of the outputs of the supply. It does NOT interrupt line power. Projecting tabs next to the switch help prevent accidentally turning it on or off.

Figure 86: PSA040 Showing Terminals & On/Off Switch

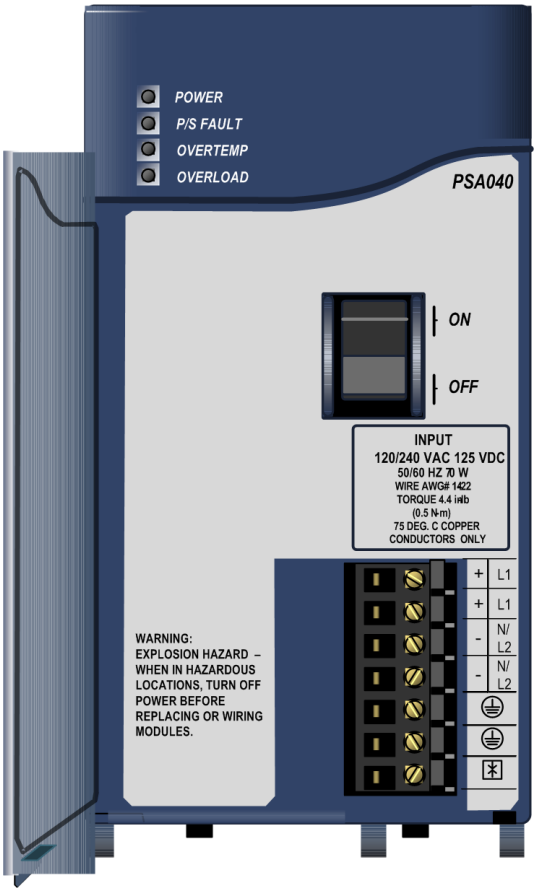

Wiring Terminals

Terminals for power, ground, and MOV disconnect accept individual 14 to 22 AWG wires.

4.4.1 Specifications: PSA040

PSA040	Specification
Nominal Rated Voltage	120/240 Vac or 125 Vdc
Input Voltage Range	85 to 264 Vac 100 to 300 Vdc
Input Power (Maximum with Full Load)	70 W maximum
Inrush Current[11]	4 A, 250 ms maximum
Output Power	40 W maximum total 24 Vdc = 36.4 W maximum power rating 5.1 Vdc = 30 W maximum 3.3 Vdc = 30 W maximum The maximum total output power available depends on the ambient temperature, as shown.
Output Voltage	24 Vdc: 19.2 to 28.8 Vdc 5.1 Vdc: 5.0 to 5.2 Vdc (5.1 Vdc nominal) 3.3 Vdc: 3.1 to 3.5 Vdc (3.3 Vdc nominal)
Output Current	24 Vdc: 0 to 1.6 A 5.1 Vdc: 0 to 6 A 3.3 Vdc: 0 to 9 A
Isolation (input to backplane):	250 Vac continuous; 1500 Vac for 1 minute
Ripple (all outputs)	150 mV
Noise (all outputs)	150 mV
Ride-through time	20 ms is the length of time the power supply maintains valid outputs if the power source is interrupted
Wiring Terminals	Each terminal accepts one 14 to 22 AWG wire
Current per Terminal	6 A
Number of Daisy-Chained PSA040 Supplies	Up to 4
For product standards and general specifications, refer to Appendix A:.	

⚠ WARNING

[11] *The Inrush Current specification is given as a guide for sizing the external power source for the IC695PSA040. Peak inrush current may be higher for shorter durations.*

The door of the power supply module must be closed. During normal operation with an AC power source, either 120 Vac or 240 Vac is present on the AC power supply. The door protects against accidental shock hazards that could cause severe or fatal injury to personnel.

Thermal Derating: PSA040

The maximum output power for power supply PSA040 depends on the ambient temperature, as displayed in the following figure. Full output power is available up to at least 32°C (89.6°F).

Figure 87: Thermal Derating Curves for PSA040

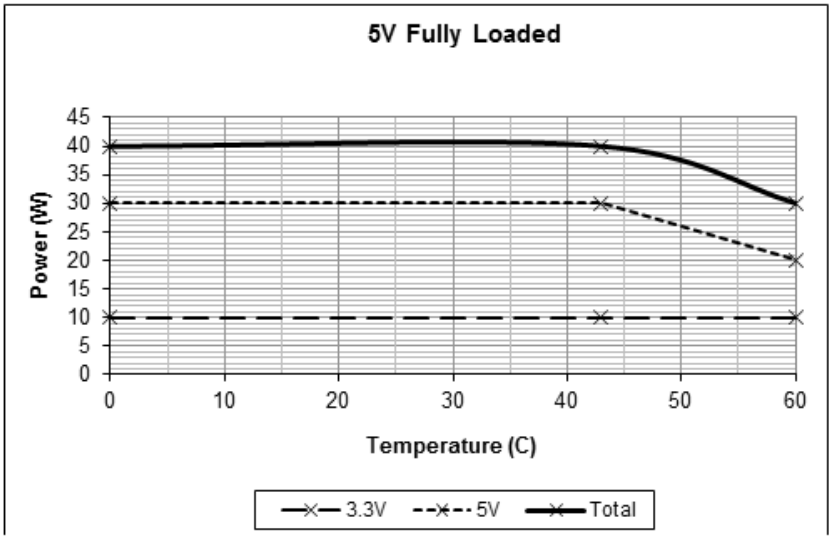

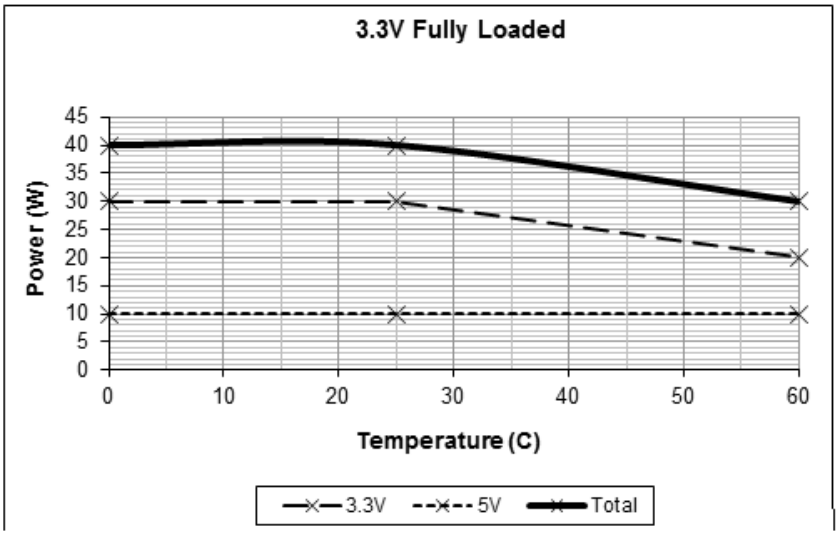

Overcurrent Protection: PSA040

The 5.1 Vdc output is electronically limited to 7 A. The 3.3 Vdc output is limited to 10 A. If an overload (including a short circuit) occurs, it is sensed internally, and the power supply shuts down. The power supply continually tries to restart until the overload condition is removed. An internal, non-repairable, fusible link in the input line is provided as a backup. The power supply usually shuts down before the fusible link blows. The fusible link also protects against internal supply faults. The CPU Fault Table displays a fault if any Over-temperature, Overload, or Power Supply fault occurs. There is no additional indication if the power supply fusible link blows.

4.4.2 Field Wiring: PSA040

Power Source and Ground Connections

The wires from the power source and ground connect to the terminals on the power supply as shown in Figure 88. Each terminal accepts one 14 to 22 AWG wire.

When tightening the screw terminals, do not exceed the maximum torque limit of 0.5 Nm (4.4 in-lb.).

⚠ WARNING

If the same external AC power source is used to provide power to two or more RX3i power supplies in the system, connection polarity must be identical at each power supply. A resulting difference in potential can injure personnel or cause damage to equipment. Also, each backplane must be connected to a common system ground.

Figure 88: Field Wiring PSA040

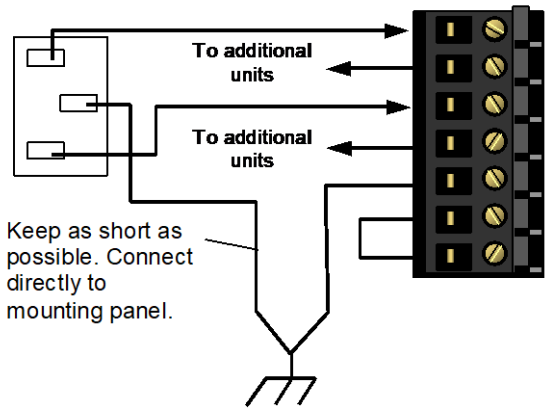

Input Overvoltage Protection

The bottom terminal is normally connected to the frame ground with a user-installed jumper as shown in Figure 89. If overvoltage protection is not required or is supplied upstream, no jumper is needed.

To Hi-pot test this supply, overvoltage protection must be disabled during the test by removing the jumper. Re-enable overvoltage protection after testing by reinstalling the jumper.

Figure 89: Overvoltage Protection for PSA040

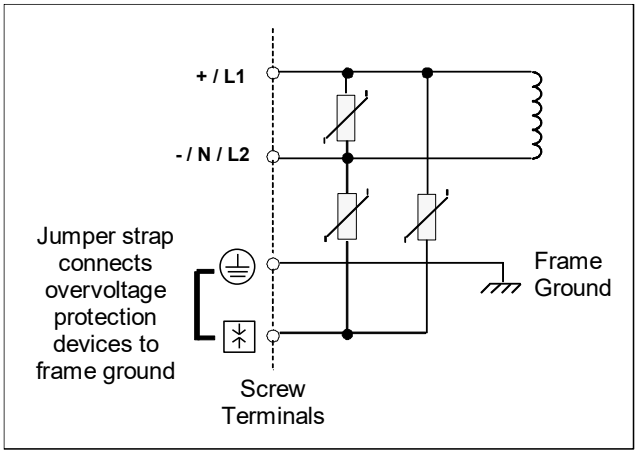

In systems with a floating neutral input (Figure 83 - the neutral line is not referenced to Protective Earth Ground), this jumper must NOT be installed. Also, in a floating neutral system, voltage surge protection devices such as MOVs **must** be installed from L1 to earth ground, and from L2 (Neutral) to earth ground, as discussed in Section 4.3.1, Special Instructions for Floating Neutral Systems.

4.5 Multi-purpose Power Supply, 120/240 Vac or 125 Vdc, 40 W: IC695PSA140

Power Supply IC695PSA140 is a multi-purpose 40 W supply that operates from an input voltage source in the range of 85 to 264 Vac or 100 Vdc to 300 Vdc.

This power supply provides three outputs:

- +5.1 Vdc output
- +24 Vdc relay output that can be used to power circuits on Output Relay modules.
- +3.3 Vdc. This output is used internally by RX3i modules with IC695 catalog numbers.

This power supply is suitable for use in load-sharing and redundancy applications. Up to four multi-purpose power supplies (PSA140 and/or PSD140) can be used in a PACSystems RX3i (IC695 catalog number) Universal Backplane. Use these Power Supplies if the number of modules required exceeds the capacity of one power supply. This power supply occupies two backplane slots.

The power supply indicates when an internal fault occurs so the CPU can detect loss of power or log the appropriate fault code.

Figure 90: IC695PSA140

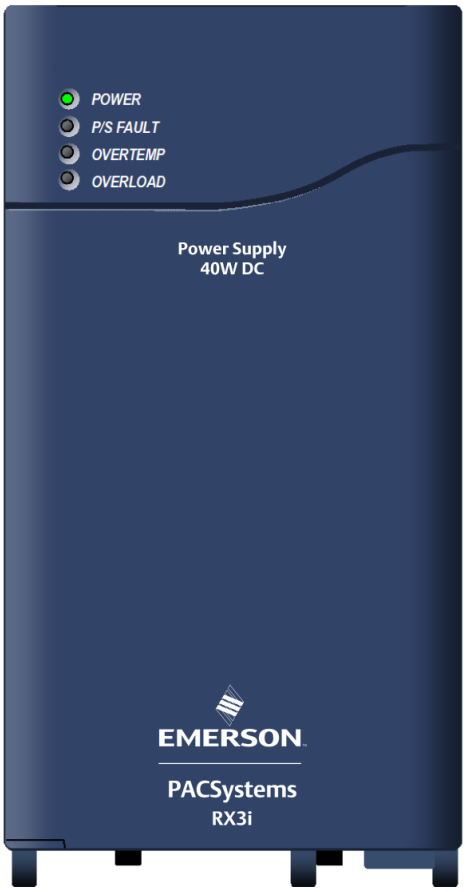

⚠ CAUTION

This power supply cannot be used with RX3i IC695PSD040 or IC695PSA040 Power Supplies in redundant or increased capacity modes. Damage to equipment may result.

LEDs

Four LEDs on the power supply indicate:

- Power (Green/Amber). When this LED is green, it indicates that power is being supplied to the backplane. When this LED is amber, power is applied to the power supply, but the Power Supply switch is off.
- P/S Fault (Red). When this LED is lit, it indicates the power supply has failed and is no longer supplying sufficient voltage to the backplane.
- Over Temperature (Amber). When this LED is lit, it indicates the power supply is approaching or exceeding its maximum operating temperature.
- Overload (Amber). When this LED is lit, it indicates the Power Supply is approaching or exceeding its maximum output capability on at least one of its outputs.

The CPU Fault Table shows a fault if any Over-temperature, Overload, or Power Supply fault occurs.

On/Off Switch

The ON/OFF switch is located behind the door on the front of Module. The switch controls the operation of the outputs of the supply. It does NOT interrupt line power. Projecting tabs next to the switch help prevent accidentally turning it on or off.

Wiring Terminals

Terminals for power, ground, and MOV disconnect accept individual 14 to 22 AWG wires.

Figure 91: PSA140 Showing Terminals & On/Off Switch

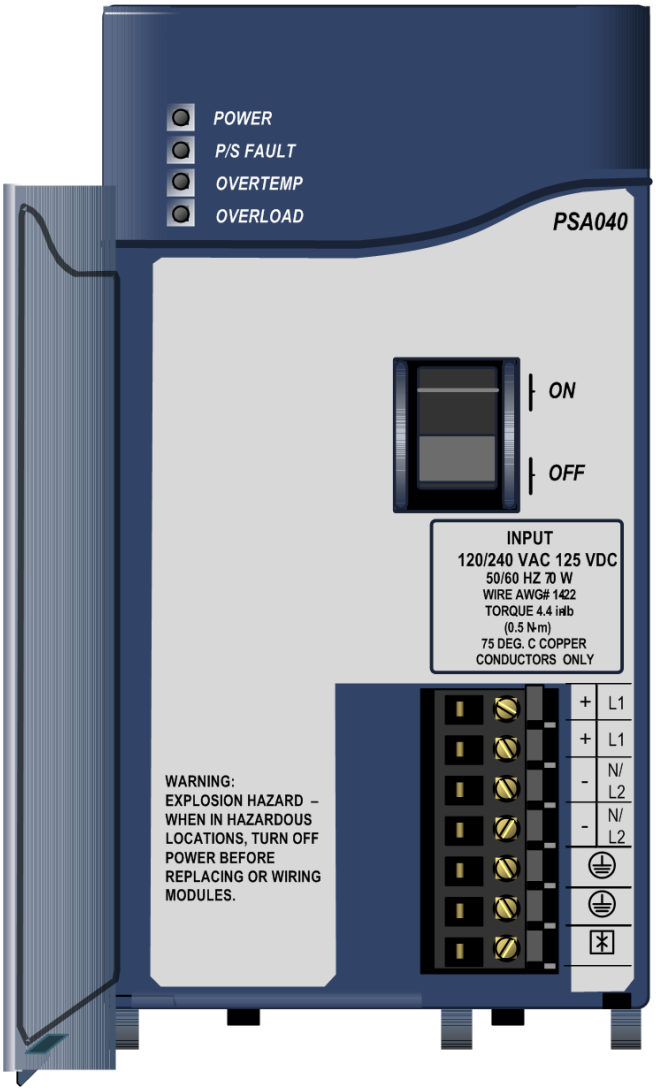

4.5.1 Specifications: PSA140

PSA140	Specification
Nominal Rated Voltage	120/240 Vac or 125 Vdc
Input Voltage Range	85 to 264 Vac 100 to 300 Vdc
Input Power (Maximum with Full Load)	70 W maximum
Inrush Current[12]	4 A, 250 ms maximum
Output Power	40 W maximum total 24 Vdc = 36.4 W maximum power rating 5.1 Vdc = 30 W maximum 3.3 Vdc = 30 W maximum The maximum total output power available depends on the ambient temperature.
Output Voltage	24 Vdc: 19.2 to 28.8 Vdc 5.1 Vdc: 5.0 to 5.2 Vdc (5.1 Vdc nominal) 3.3 Vdc: 3.1 to 3.5 Vdc (3.3 Vdc nominal)
Output Current	24 Vdc: 0 to 1.6 A 5.1 Vdc: 0 to 6 A 3.3 Vdc: 0 to 9 A
Isolation (input to backplane):	250 Vac continuous; 1500 Vac for 1 minute
Ripple (all outputs)	150 mV
Noise (all outputs)	150 mV
Ride-through time	20 ms. This is the length of time the power supply maintains valid outputs if the power source is interrupted
Wiring Terminals	Each terminal accepts one 14 to 22 AWG wire.
Current per Terminal	6 A
Number of Daisy-Chained PSA140 Supplies	Up to 4
Number of PSA140 Power Supplies in Universal Backplane	Up to 4

For product standards and general specifications, refer to Appendix A:.

⚠ WARNING

[12] *The Inrush Current specification is given as a guide for sizing the external power source for the IC695PSA140. Peak inrush current may be higher for shorter durations.*

The door of the power supply module must be closed. During normal operation with an AC power source, either 120 Vac or 240 Vac is present on the AC power supply. The door protects against accidental shock hazards that could cause severe or fatal injury to personnel.

Thermal Derating: PSA140

The maximum output power for power supply PSA140 depends on the ambient temperature.

Figure 92: Thermal Derating Curves for PSA140

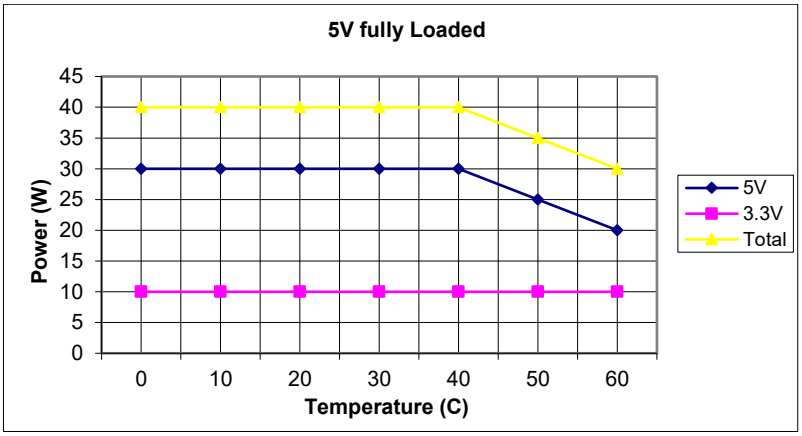

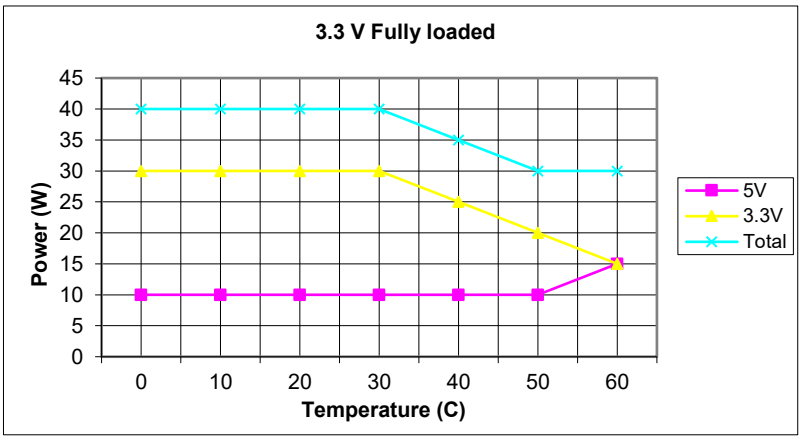

Overcurrent Protection: PSA140

The 5.1 Vdc output is electronically limited to 7 A. The 3.3 Vdc output is limited to 10 A. If an overload (including short circuits) occurs, it is sensed internally, and the power supply shuts down. Because it is designed for redundancy applications, this power supply latches off in fault conditions. It does not automatically try to restart until the overload condition is removed. Input power must be cycled to clear a latched fault. However, if the power supply is used in a non-redundant application where automatic restarting is required, a jumper plug can be installed.

An internal non-repairable fusible link in the input line is provided as a backup. The power supply usually shuts down before the fusible link blows. The fusible link also protects against internal supply faults. The CPU Fault Table shows a fault if any Over-temperature, Overload or P/S Fault occurs. There is no additional indication if the power supply fusible link blows.

Figure 93: Jumper Location PSA140

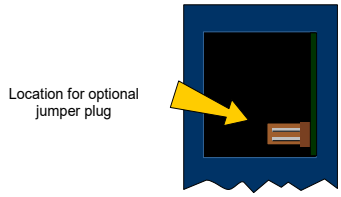

In a non-redundancy application, where automatic restarting may be appropriate, a jumper plug (or shunt) can be installed at the rear of Module as shown in Figure 93. The jumper plug must have 0.100 in spacing on the center and accommodate 0.25 in pins. Example parts are Radio Shack DIP Programming Shunt #276-1512 and DIGI-Key #59000-ND. Module must be removed from the backplane to install the jumper plug.

4.5.2 Field Wiring: PSA140

Power Source and Ground Connections

The wires from the power source and ground connect to the terminals on the power supply as shown in Figure 94. Each terminal accepts one 14 to 22 AWG wire.

When tightening the screw terminals, do not exceed the maximum torque limit of 0.5 Nm (4.4 in-lb.).

Figure 94: Field Wiring for PSA140

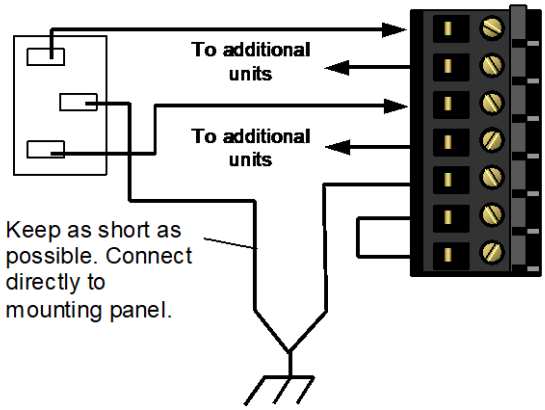

⚠ WARNING

If the same external AC power source is used to provide power to two or more RX3i power supplies in the system, connection polarity must be identical at each power supply. A resulting difference in potential can injure personnel or cause damage to equipment. Also, each backplane must be connected to a common system ground.

Input Overvoltage Protection

The bottom terminal is normally connected to frame ground with a user-installed jumper as shown in Figure 95. If overvoltage protection is not required or is supplied upstream, no jumper is needed.

To Hi-pot test this supply, overvoltage protection must be disabled during the test by removing the jumper. Re-enable overvoltage protection after testing by reinstalling the jumper.

Figure 95: Overvoltage Protection for PSA140

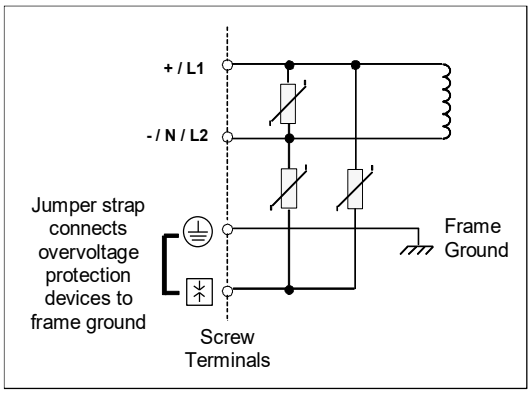

In systems with a floating neutral input (Figure 83 - the neutral line is not referenced to Protective Earth Ground), this jumper must NOT be installed. Also, in a floating neutral system, voltage

surge protection devices such as MOVs **must** be installed from L1 to earth ground, and from L2 (Neutral) to earth ground, as discussed in Special Instructions for Floating Neutral Systems, Section 4.3.1.

4.6 Power Supply, 24 Vdc, 40 W: IC695PSD040

Power Supply IC695PSD040 is a 40 W supply that operates from an input voltage source in the range of 18Vdc to 30 Vdc.

- +5.1 VDC output used internally by RX3i modules with IC695 and IC694 catalog numbers.
- +24 VDC output used to power circuits on Output Relay modules.
- +3.3 VDC output used internally by RX3i modules with IC695 catalog numbers.

Figure 96: IC695PSD040

⚠ CAUTION

Only one IC695PSD040 can be installed in a PACSystems RX3i (IC695 catalog number) Universal Backplane.

This Power supply cannot be used with other RX3i power supplies in redundant or increased capacity modes.

Power supply version IC695PSD040C or earlier may cause equipment damage if inadvertently installed in the same backplane as another RX3i power supply.

This power supply occupies one slot. If the number of modules required exceeds the capacity of the power supply, the additional modules must be installed in expansion or remote backplanes.

The power supply indicates when an internal fault occurs so the CPU can detect loss of power or log the appropriate fault code.

LEDs

Four LEDs on the power supply indicate:

- Power (Green/Amber). When this LED is green, it indicates power is being supplied to the backplane. When this LED is amber, power is applied to the power supply, but the power supply switch is off.
- P/S Fault (Red). When this LED is lit, it indicates the Power Supply has failed and is no longer supplying sufficient voltage to the backplane.
- Over Temperature (Amber). When this LED is lit, it indicates the power supply is approaching or exceeding its maximum operating temperature.
- Overload (Amber). When this LED is lit, it indicates the Power Supply is approaching or exceeding its maximum output capability on at least one of its outputs.

If the red P/S FAULT LED is lit, the power supply has failed and is no longer supplying sufficient voltage to the backplane.

The amber OVERTEMP and OVERLOAD LEDs light to warn of high temperature or high load conditions.

The CPU Fault Table shows a fault if any Over-temperature, Overload, or Power Supply fault occurs.

Figure 97: PSD040 Terminals and Switch Locations

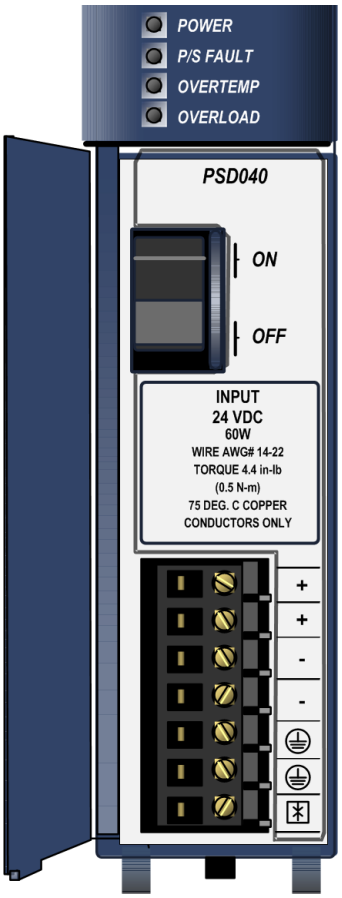

On/Off Switch

The ON/OFF switch is located behind the door on the front of Module. The switch controls the operation of the outputs of the supply. It does NOT interrupt line power. A projecting tab next to the switch helps prevent accidentally turning it on or off.

Wiring Terminals

Terminals for +24 V and –24 V power, ground, and MOV disconnect accept individual 14 to 22AWG wires.

4.6.1 Specifications: PSD040

PSD040	Specification
Nominal Rated Voltage	24 Vdc
Input Voltage Range	18 to 30 Vdc
Input Power	60 W maximum at full load
Inrush Current[13]	4 A, 100 ms maximum
Output Power	40 W maximum total of both outputs 5.1 Vdc = 30 W maximum 3.3 Vdc = 30 W maximum Maximum output power depends on ambient temperature
Output Voltage	5.1 Vdc: 5.0 to 5.2 Vdc (5.1 Vdc nominal) 3.3 Vdc: 3.1 to 3.5 Vdc (3.3 Vdc nominal)
Output Current	5.1 Vdc: 0 to 6 A 3.3 Vdc: 0 to 9 A
Isolation	None
Ripple (all outputs)	50 mV
Noise (all outputs)	50 mV
Ride-through time	10 ms is the length of time the Power Supply maintains valid outputs if the power source is interrupted. If this Power Supply is used with IC694 and IC693 modules that have relay outputs, note that dropouts longer than 10ms will cause dropouts on Modules.
Wiring Terminals	Each terminal accepts one 14 to 22 AWG wire.
Terminal Current	6 A
Number of Daisy-chained PSD040 Supplies	Up to 2

[13] *The Inrush Current specification is given as a guide for sizing the external power source for the IC695PSD040. Peak inrush current may be higher for shorter durations.*

Thermal Derating: PSD040

The maximum output power for power supply PSD040 depends on the ambient temperature. Full output power is available up to at least 40°C (89.6°F).

Figure 98: Thermal Derating Curves for PSD040

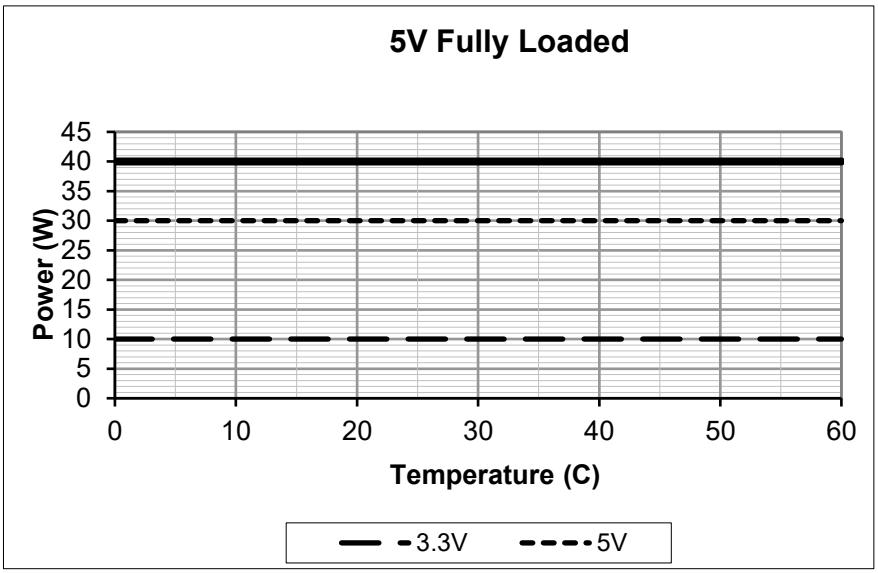

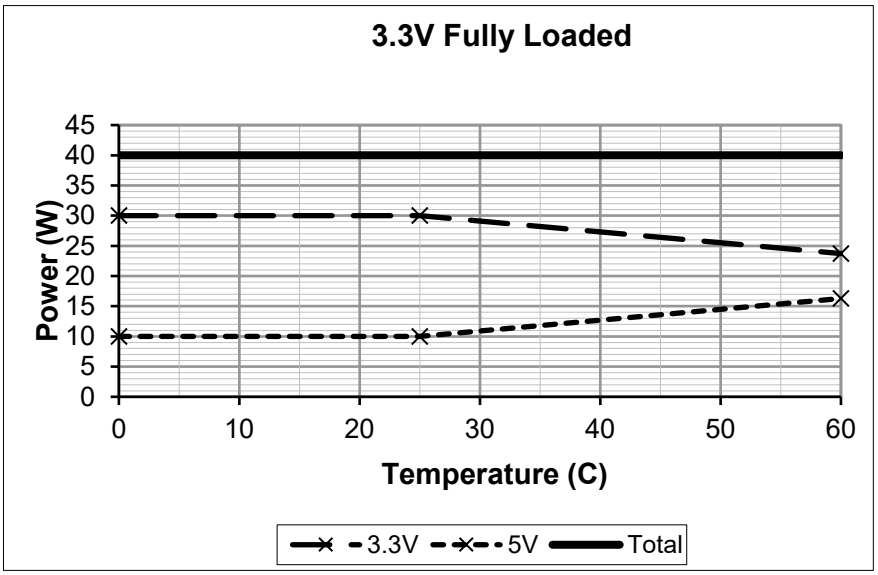

Overcurrent Protection: PSD040

The 5.1 Vdc output is electronically limited to 7 A. The 3.3 Vdc output is limited to 10 A. If an overload (including short circuits) occurs, it is sensed internally, and the power supply shuts down. The power supply continually tries to restart until the overload condition is removed. An internal non-repairable fusible link in the input line is provided as a backup. The power supply usually shuts down before the fusible link blows. The fusible link also protects against internal supply faults. The CPU Fault Table shows a fault if any Over-temperature, Overload, or Power Supply fault occurs. There is no additional indication if the power supply fusible link blows.

4.6.2 Field Wiring: PSD040

Power Source and Ground Connections

The wires from the power source and ground connect to the terminals on the power supply as shown in Figure 99. Each terminal accepts one 14 to 22 AWG wire.

When tightening the screw terminals, do not exceed the maximum torque limit of 0.5 Nm (4.4 in-lb.).

Important: Be sure to connect DC- to Earth Ground.

Figure 99: Field Wiring for PSD040

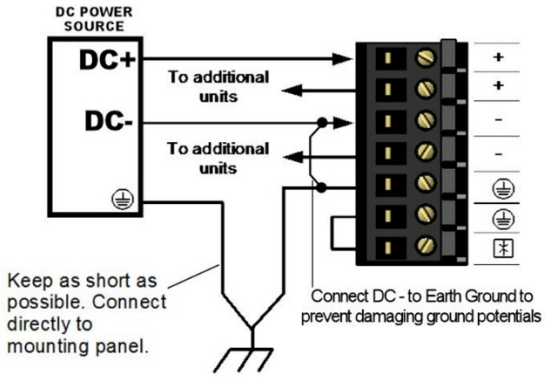

⚠ WARNING

If the same external DC power source is used to provide power to two or more power supplies in the system, connection polarity must be identical at each RX3i power supply. A resulting difference in potential can injure personnel or cause damage to equipment. Also, each backplane must be connected to a common system ground.

Input Overvoltage Protection

The bottom terminal is normally connected to the frame ground with a user-installed jumper as shown in Figure 100. If overvoltage protection is not required or is supplied upstream, no jumper is required.

To Hi-pot test this supply, overvoltage protection must be disabled during the test by removing the jumper. Re-enable overvoltage protection after testing by reinstalling the jumper.

Figure 100: Overvoltage Protection for PSD040

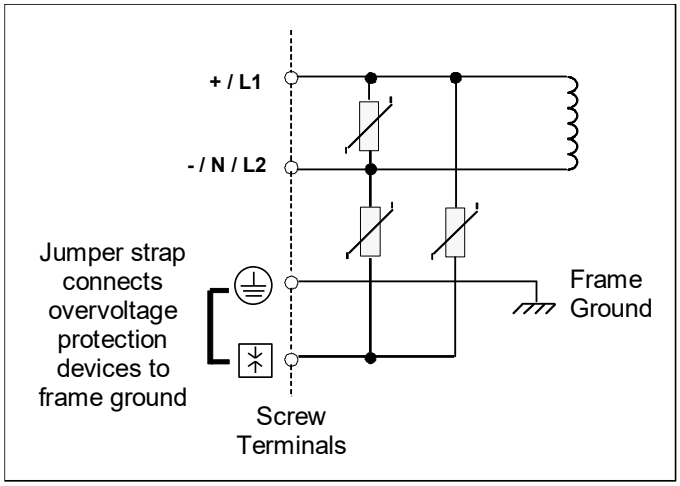

⚠ WARNING

This power supply is not isolated and is therefore not compatible with floating or positive grounded systems.

4.7 Multi-Purpose Power Supply, 24 Vdc, 40 W: IC695PSD140

Power supply IC695PSD140 is a multi-purpose 40-Watt supply that operates from an input voltage source in the range of 18Vdc to 30 Vdc.

This power supply provides three outputs:

- +5.1 VDC output used internally by RX3i modules with IC695 and IC694 catalog numbers.
- +24 VDC output used to power circuits on Output Relay modules.
- +3.3 VDC output used internally by RX3i modules with IC695 catalog numbers.

Multi-purpose power supply IC695PSD140 is suitable for use in load-sharing and redundancy applications. It must be installed in a PACSystems RX3i (IC695 catalog number) Universal Backplane. It can be used as the only power supply in the backplane or combined with up to three additional multi-purpose power supplies.

The power supply indicates when an internal fault occurs so the CPU can detect loss of power or log the appropriate fault code.

Figure 101: IC695PSD140

⚠ CAUTION

This power supply cannot be used with RX3i IC695PSD040 or IC695PSA040 power supplies in redundant or increased capacity modes. Damage to equipment may result.

LEDs

Four LEDs on the power supply indicate:

- Power (Green/Amber). When this LED is green, it indicates power is being supplied to the backplane. When this LED is amber, power is applied to the power supply, but the power supply switch is off.
- P/S Fault (Red). When this LED is lit, it indicates the Power Supply has failed and is no longer supplying sufficient voltage to the backplane.
- Over Temperature (Amber). When this LED is lit, it indicates that the power supply is approaching or exceeding its maximum operating temperature.
- Overload (Amber). When this LED is lit, it indicates the power supply is approaching or exceeding its maximum output capability on at least one of its outputs.

If the red P/S FAULT LED is lit, the power supply has failed and is no longer supplying sufficient voltage to the backplane.

The amber OVERTEMP and OVERLOAD LEDs light to warn of high temperature or high load conditions.

The CPU Fault Table shows a fault if any Over-temperature, Overload, or Power Supply fault occurs.

Wiring Terminals

Terminals for +24 V and –24 V power, ground, and MOV disconnect accept individual 14 to 22 AWG wires.

On/Off Switch

The ON/OFF switch is located behind the door on the front of Module. The switch controls the operation of the outputs of the supply. It does NOT interrupt line

Figure 102 PSD140 Terminals and On/Off Switch

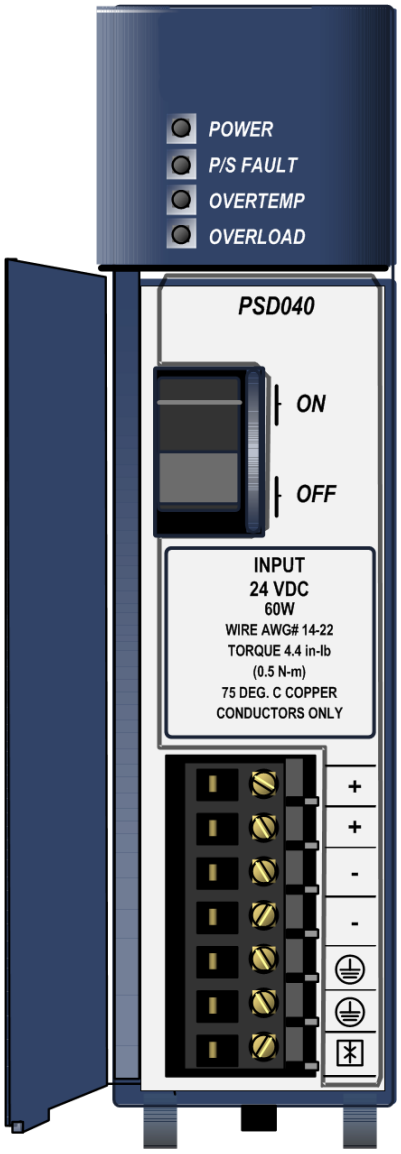

power. A projecting tab next to the switch helps prevent accidentally turning it on or off.

4.7.2 Specifications: PSD140

PSD140	Specifications
Nominal Rated Voltage	24 Vdc
Input Voltage Range	18 to 30 Vdc
Input Power Inrush Current[14]	60 W maximum at full load 4 A, 100 ms maximum
Output Power	40 W maximum total of both outputs 5.1 Vdc = 30 W maximum 3.3 Vdc = 30 W maximum Maximum output power depends on ambient temperature
Output Voltage	5.1 Vdc: 5.0 V to 5.2 Vdc (5.1 Vdc nominal) 3.3 Vdc: 3.1 V to 3.5 Vdc (3.3 Vdc nominal)
Output Current	5.1 Vdc: 0 to 6 A 3.3 Vdc: 0 to 9 A
Isolation	None
Ripple (all outputs)	50 mV
Noise (all outputs)	50 mV
Ride-through time	10 ms is the length of time the power supply maintains valid outputs if the power source is interrupted. If this power supply is used with IC694 and IC693 modules that have relay outputs, special precautions should be taken because dropouts in the source voltage will be seen by Module and may cause relay dropouts.
Wiring Terminals	Each terminal accepts one 14 to 22 AWG wire
Terminal Current	6 A
Number of Daisy-Chained PSD140 Supplies	Up to 4
Number of PSD140 Supplies in Universal Backplane	Up to 4

[14] *The Inrush Current specification is given as a guide for sizing the external power source for the IC695PSD140. Peak inrush current may be higher for shorter durations.*

Thermal Derating: PSD140

The maximum output power for power supply PSD140 depends on the ambient temperature. Full output power is available up to at least 40°C (89.6°F).

Figure 103: Thermal Derating Curves for PSD140

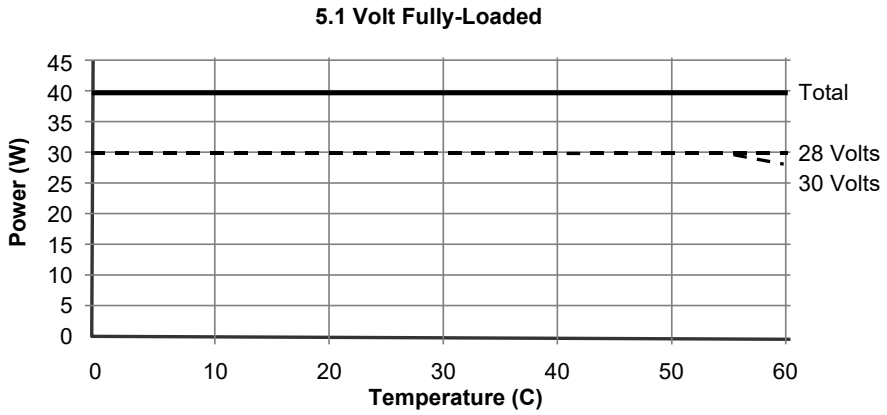

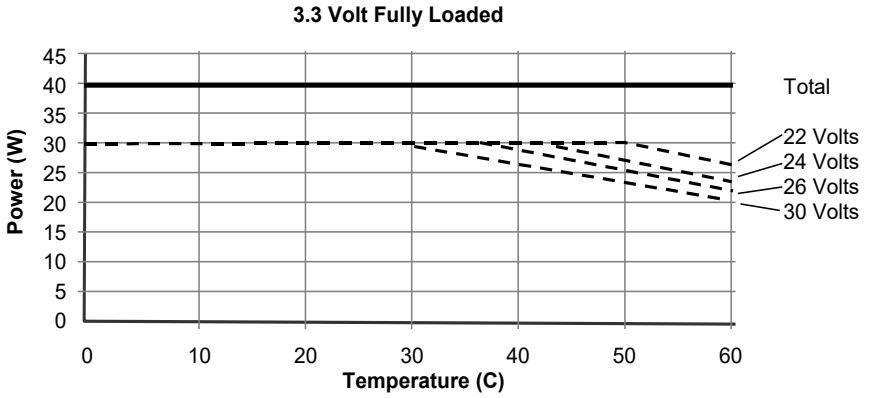

Overcurrent Protection: PSD140

The 5.1 Vdc output is electronically limited to 7 A. The 3.3 Vdc output is limited to 10 A. If an overload (including short circuits) occurs, it is sensed internally, and the power supply shuts down. Because it is designed for redundancy applications, this power supply latches OFF in fault conditions and will not automatically try to restart. Input power must be cycled to clear a latched fault.

An internal non-repairable fusible link in the input line is provided as a backup. The power supply usually shuts down before the fusible link blows. The fusible link also protects against internal supply faults. The CPU Fault Table shows a fault if any Over-temperature, Overload or P/S Fault occurs. There is no additional indication if the power supply fusible link blows.

In a non-redundancy application, where automatic restarting may be appropriate, a jumper plug (or shunt) can be installed at the rear of Module as shown in Figure 104. The jumper plug must have 0.100 in spacing on the center and accommodate 0.25 in pins. Example parts are Radio Shack DIP Programming Shunt #276-1512 and DIGI-Key #59000-ND. Module must be removed from the backplane to install the jumper plug.

Figure 104: Jumper Location PSD140

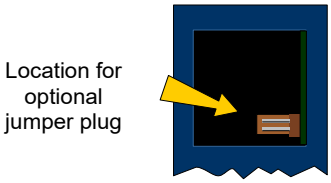

4.7.3 Field Wiring: PSD140

Power Source and Ground Connections

The wires from the power source and ground connect to the terminals on the power supply as shown in Figure 105. Each terminal accepts one 14 to 24 AWG wire.

Important: Be sure to connect DC- to Earth Ground.

Figure 105: Field Wiring for PSD140

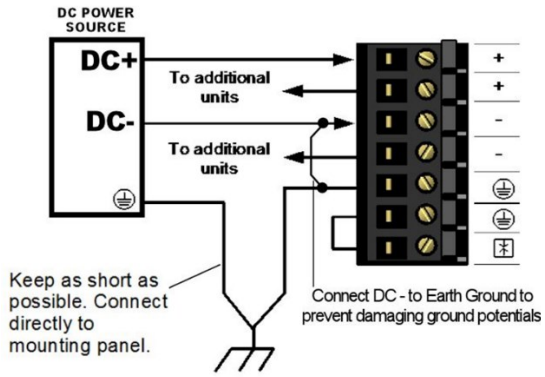

Input Overvoltage Protection

The bottom terminal is normally connected to the frame ground with a user-installed jumper as shown in Figure 106. If overvoltage protection is not required or is supplied upstream, no jumper is required.

To Hi-pot test this supply, overvoltage protection must be disabled during the test by removing the jumper. Re-enable overvoltage protection after testing by reinstalling the jumper.

Figure 106: Overvoltage Protection for PSD140

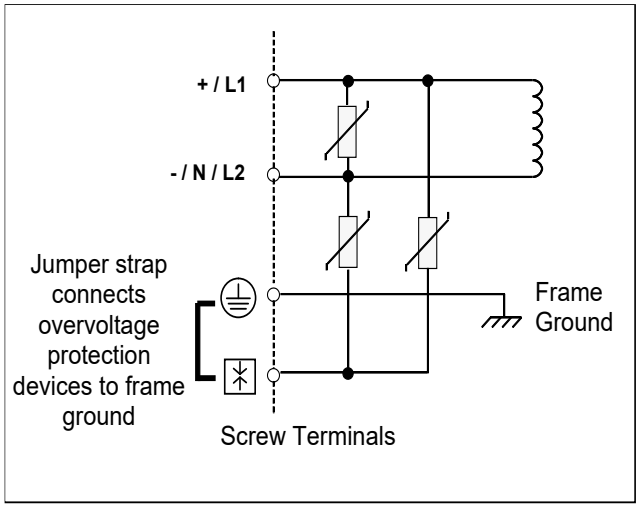

⚠ WARNING

This power supply is not isolated and is therefore not compatible with floating or positive grounded systems.

4.8 Power Supply, 24 Vdc, 80 W: IC695PSD180

Power Supply IC695PSD180 is an 80 W supply that operates from an input voltage source in the range of 18 Vdc to 30 Vdc

- +24 Vdc output used to power circuits on Output Relay modules.
- +5.1 Vdc output used internally by RX3i modules with IC695 and IC694 catalog numbers.
- +3.3 Vdc output used internally by RX3i modules with IC695 catalog numbers.

This power supply occupies one slot. If the number of modules required exceeds the capacity of the power supply, up to two additional modules can be installed in the universal backplane. If no slots are open, the additional modules must be installed in expansion or remote backplanes.

The power supply indicates when an internal fault occurs so the CPU can detect loss of power or log the appropriate fault code.

Figure 107: IC695PSD180

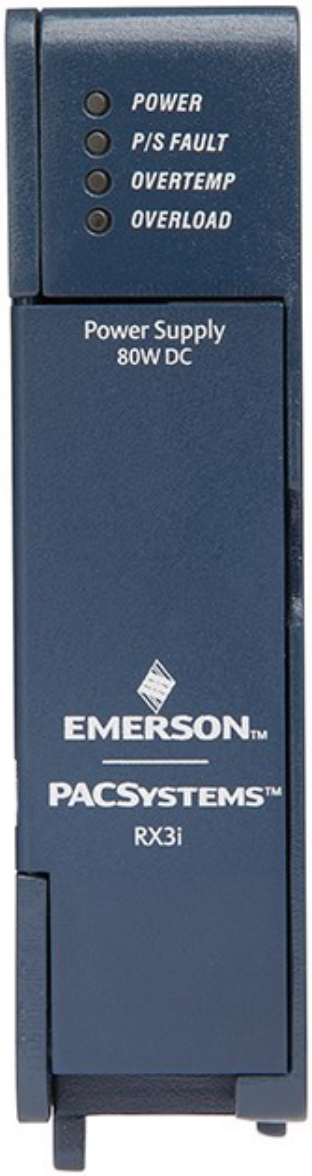

LEDs

Four LEDs on the power supply indicate:

- Power (Green/Amber): When this LED is green, it indicates power is being supplied to the backplane. When this LED is amber, power is applied to the power supply, but the power supply switch is off.
- P/S Fault (Red): When this LED is lit, it indicates the power supply has failed and is no longer supplying sufficient voltage to the backplane.
- Over Temperature (Amber): When this LED is lit, it indicates the power supply is approaching or exceeding its maximum operating temperature.
- Overload (Amber): When this LED is lit, it indicates the Power Supply is approaching or exceeding its maximum output capability on at least one of its outputs.

The CPU Fault Table shows a fault if any Overtemperature, Overload, or Power Supply fault occurs.

On/Off Switch

The ON/OFF switch is located behind the door on the front of Module. The switch controls the operation of the outputs of the supply. It does NOT interrupt line power.

Wiring Terminals

Terminals for positive (+) 24 V and negative (-) 24 V power, ground, and MOV Disconnect accept individual 14 to 22 AWG wires.

Figure 108: PSD180 Terminals and Switch Locations

4.8.1 Specifications: PSD180

PSD180	Specifications
Nominal Rated Voltage	24 Vdc
Input Voltage Range	18 to 30 Vdc
Input Power (Maximum with Full Load)	105 W maximum at full load
Inrush Current[15]	10 A, 100 ms maximum
Output Power	80 W maximum total of both outputs 24 Vdc = 75 W maximum power rating 5.1 Vdc = 60 W maximum power rating 3.3 Vdc = 60 W maximum power rating **Note:** Maximum output power depends on ambient temperature. Refer to *Thermal Derating:* PSD180 for more information.
Output Voltage	24 Vdc: 21.6 to 26.4 Vdc (24 Vdc nominal) 5.1 Vdc: 4.85 to 5.25 Vdc (5.1 Vdc nominal) 3.3 Vdc: 3.25 to 3.47 Vdc (3.3 Vdc nominal)
Isolation (Input to Chassis)	1500 Vac for 1 minute
Ripple (all outputs)	24 Vdc: 750 mV 5.1 Vdc: 150 mV 3.3 Vdc: 150 mV
Noise (all outputs)	24 Vdc: 750 mV 5.1 Vdc: 150 mV 3.3 Vdc: 150 mV
Ride-through time	10 ms is the length of time the Power Supply maintains valid outputs if the power source is interrupted. If this Power Supply is used with IC694 and IC693 modules that have relay outputs, note that dropouts longer than 10 ms will cause dropouts on Modules.
Turn On Time	700 ms at ambient temperature 10°C or higher 6000 ms at ambient temperature lower than 10°C
Wiring Terminals	Each terminal accepts one 14 to 22 AWG wire.
Terminal Current	10 A
Number of Daisy-chained PSD180 Supplies	Up to 3

[15] *The Inrush Current specification is given as a guide for sizing the external power source for the IC695PWR321. Peak inrush current may be higher for shorter durations.*

Thermal Derating: PSD180

The maximum output power for power supply PSD180 depends on the ambient temperature.

Single Unit Derating

The following graphs display derating curves for a system with one PSD180 unit at full load.

Figure 109: Thermal Derating Curves for Single Unit PSD180

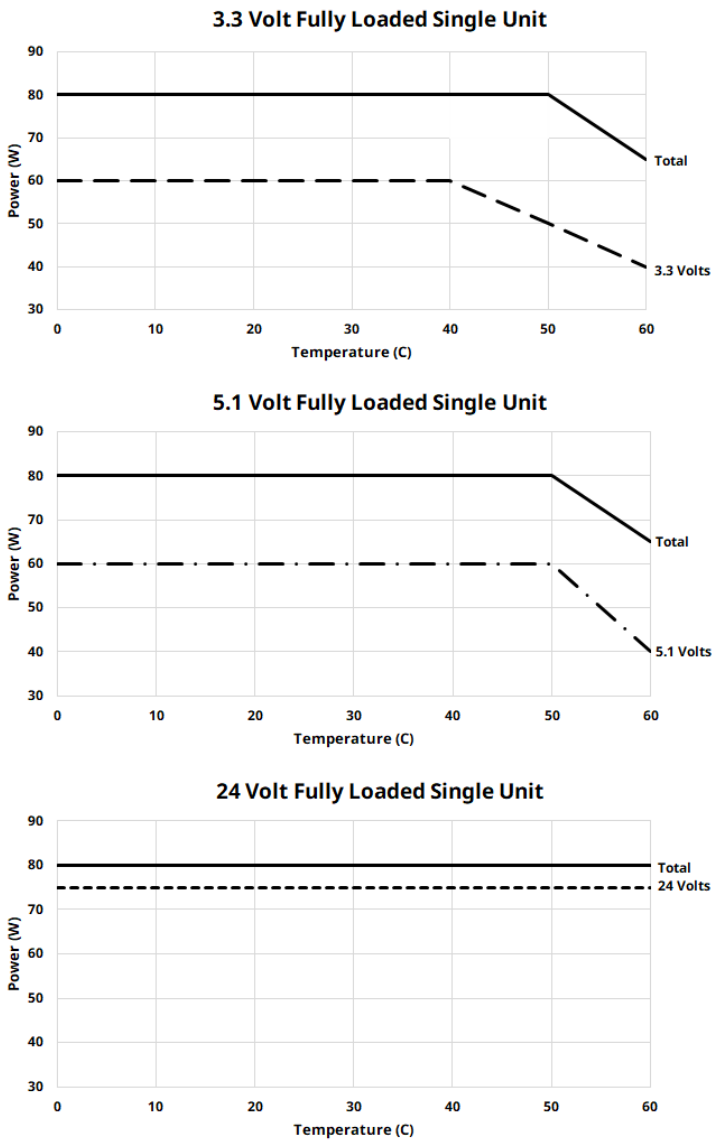

A typical system with a single PSD180 unit is shown below. The configuration would use 35.7 W of 3.3 V power, 33.8 W of 5 V power, and 2.4 W of 24 V power for a total of 71.9 W. While the individual derating charts would suggest that there would be no derating, the unit would need to be limited to an operating temperature of 56°C to prevent throttling or failure. This stems from the total power derating at 71.9 W.

Figure 110: Example of Typical Single PSD180 System

Figure 111: Typical PSD180 Single Unit System Derating

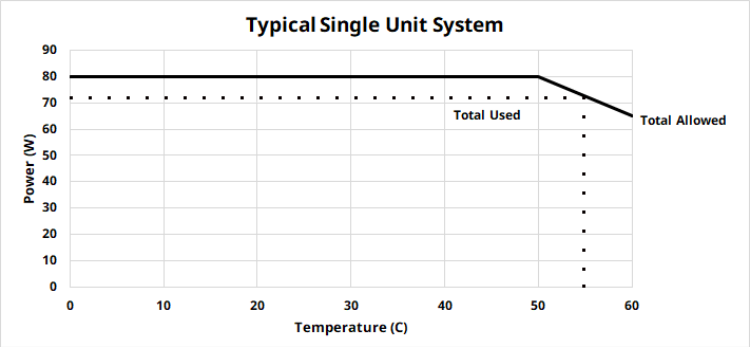

Dual Unit Derating

The following graphs display derating curves for a system with two PSD180 units at full load.

Figure 112: Thermal Derating Curves for Dual Unit PSD180

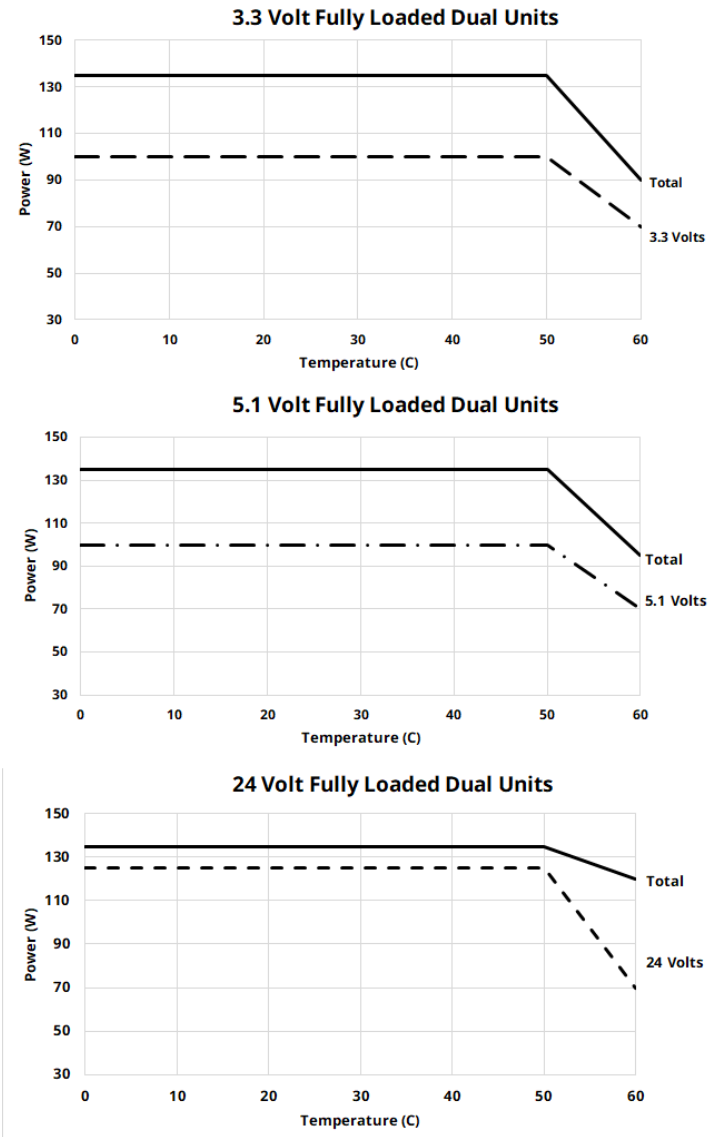

A typical system with dual PSD180 units is shown below. The configuration would use 41.6 W of 3.3 V power, 45.3 W of 5 V power, and 2.4 W of 24 V power for a total of 89.3 W. This load would not result in derating and no thermal limiting is needed.

Figure 113: Example of Typical Dual PSD180 System

Figure 114: Typical PSD180 Dual Unit System Derating

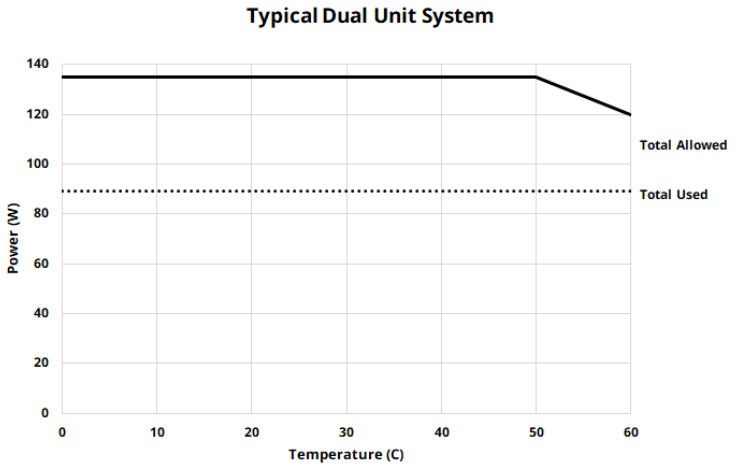

Overcurrent Protection: PSD180

The 5.1 Vdc output is electronically limited to 13.2 A. The 3.3 Vdc output is limited to 19.8 A. If an overload (including short circuits) occurs, it is sensed internally and the Power Supply shuts down. Because it is designed for redundancy applications, this Power Supply latches “OFF” in fault conditions and will not automatically try to restart. Input power must be cycled to clear a latched fault. However, if the Power Supply is used in a non-redundant application, the latched fault behavior can be changed to automatically attempt a restart.

In a non-redundancy application, where automatic restarting may be appropriate, the switch on the back of the module as shown in Figure 115 should be put in the auto-restart position. The module must be removed from the backplane to change switch position.

An internal non-repairable fusible link in the input line is provided as a backup. The Power Supply usually shuts down before the fusible link blows. The fusible link also protects against internal supply faults. The CPU Fault Table shows a fault if any Overtemperature, Overload, or P/S Fault occurs. There is no additional indication if the Power Supply fusible link blows

Figure 115: Switch Set to Auto-Restart

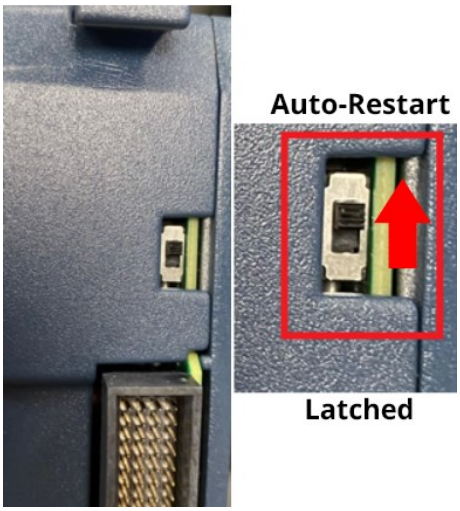

4.8.2 Field Wiring: PSD180

Power Source and Ground Connections

The wires from the power source and ground connect to the terminals on the power supply as shown in Figure 116. Each terminal accepts one 14 to 22 AWG wire.

When tightening the screw terminals, do not exceed the maximum torque limit of 0.5 Nm (4.5 in-lb).

Figure 116: Field Wiring for PSD180

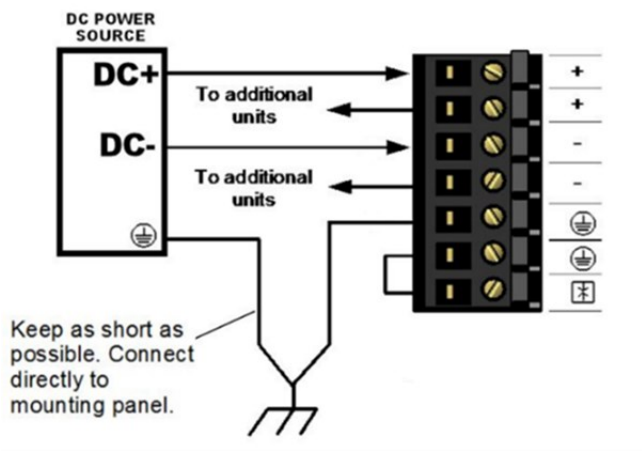

Pin	Function
1	+24 V input
2	+24 V input
3	-24 V input
4	-24 V input
5	Frame Ground
6	Frame Ground
7	MOV disconnect

⚠ WARNING

If the same external DC power source is used to provide power to two or more power supplies in the system, connection polarity must be identical at each RX3i power supply. A resulting difference in potential can injure personnel or cause damage to equipment. Also, each backplane must be connected to a common system ground.

Input Overvoltage Protection

The bottom terminal is normally connected to the frame ground with a user-installed jumper as shown in Figure 117Figure 106. If overvoltage protection is not required or is supplied upstream, no jumper is required.

To Hi-pot test this supply, overvoltage protection must be disabled during the test by removing the jumper. Re-enable overvoltage protection after testing by reinstalling the jumper.

Figure 117: Overvoltage Protection for PSD1800

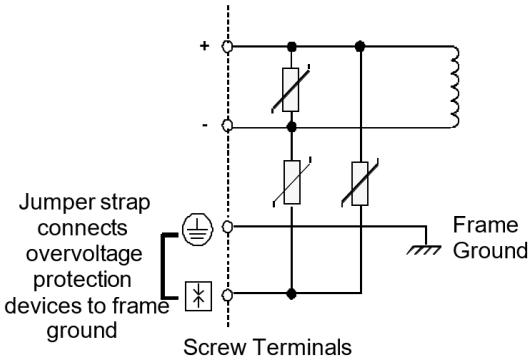

4.9 Power Supply, 120/240 Vac or 125 Vdc: IC694PWR321

Power Supply IC694PWR321 is a 30 W supply that operates from an input voltage source in the range of 85 Vac to 264 Vac or 100 Vdc to 300 Vdc.

This power supply provides three outputs:

- +5 Vdc output
- Relay +24 Vdc output that can be used to power circuits on Output Relay modules
- Isolated +24 Vdc. This power is used internally by some modules. It can also be used to power field devices connected to 24 Vdc Input modules

Power Supply IC694PWR321 can be used in an Expansion backplane in an RX3i system. The battery backup and serial port functions are not available in Expansion Backplanes.

Figure 118: IC694PWR321

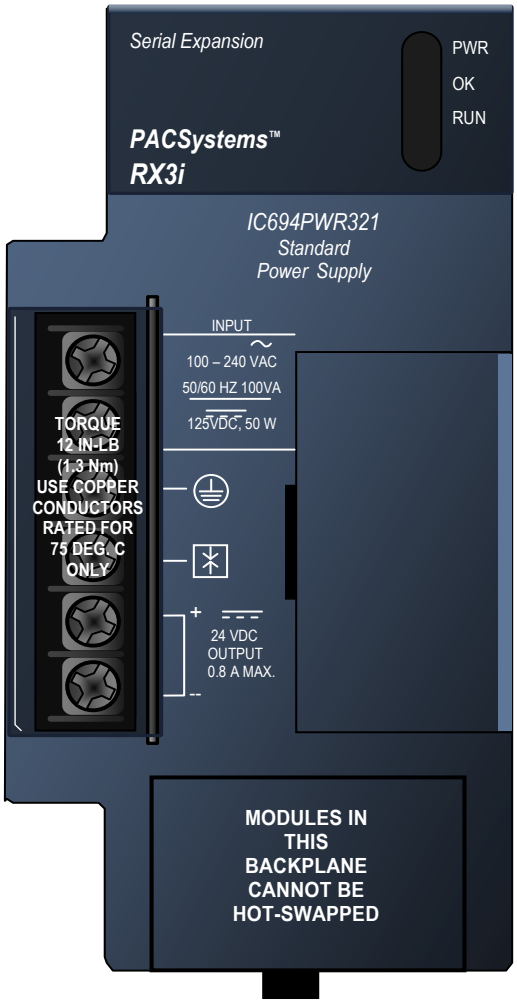

LEDs

The green PWR LED shows the operating state of the Power Supply. PWR is ON when the power supply has a correct source of power and is operating properly. It is OFF when a power supply fault occurs, or power is not applied.

The green OK LED is steady ON if the PLC is operating properly. It is OFF if a problem is detected by the PLC.

The green RUN LED is ON when the PLC is in Run mode.

4.9.1 Specifications: PWR321

PWR321	Specifications
Nominal Rated Voltage	120/240 Vac or 125 Vdc
Input Voltage Range	85 Vdc to 264 Vac 100 Vdc to 300 Vdc
Input Power (Maximum with Full Load)	90 VA with Vac Input 50 W with Vdc Input
Inrush Current[16]	4 A peak, 250 ms maximum
Output Power	5 Vdc and 24 Vdc Relay: 15 W maximum 24 Vdc Relay: 15 W maximum 24 Vdc Isolated: 20 W maximum N**ote**: 30 W maximum total (all three outputs)
Output Voltage	5 Vdc: 5.0 Vdc to 5.2 Vdc (5.1 Vdc nominal) Relay 24 Vdc: 24 to 28 Vdc Isolated 24 Vdc: 21.5 to 28 Vdc
Isolation (input to backplane):	1500 Vac (for 1 minute)
Protective Limits Overvoltage: Overcurrent:	 5 Vdc output: 6.4 Vdc to 7 Vdc 5 Vdc output: 4 A maximum
Ride-through Time:	20 ms minimum This is the length of time the power supply maintains valid outputs if the power source is interrupted.
Fuse	2 A, part number 44A724627-109. Refer to Section 2.6.4, *Module Fuse List*.

Overcurrent Protection: PWR321

The 5 Vdc output is electronically limited to 3.5 A. If an overload (including short circuits) occurs, it is sensed internally, and the power supply shuts down. The power supply continually tries to restart until the overload condition is removed. An internal replaceable fuse in the input line is provided as a backup. The power supply usually shuts down before the fuse blows. The fuse also protects against internal supply faults.

⚠ WARNING

[16] *The Inrush Current specification is given as a guide for sizing the external power source for the IC695PWR321. Peak inrush current may be higher for shorter durations.*

⚠ The door of the power supply module must be closed. During normal operation with an AC power source, either 120 Vac or 240 Vac is present on the AC Power Supply. The door protects against accidental shock hazards that could cause severe or fatal injury to personnel.

4.9.3 Field Wiring: PWR321

AC Power Source Connections

The Hot, Neutral, and Ground wires from the 120 Vac power source or L1, L2, and Ground wires from the 240 Vac power source connected to the top three terminals on the Power Supply.

DC Power Source Connections

Connect the + and - –ires from the 125 Vdc power source to the top two terminals. These connections are not polarity-sensitive on power supply PWR321.

Figure 119: Field Wiring for PWR321

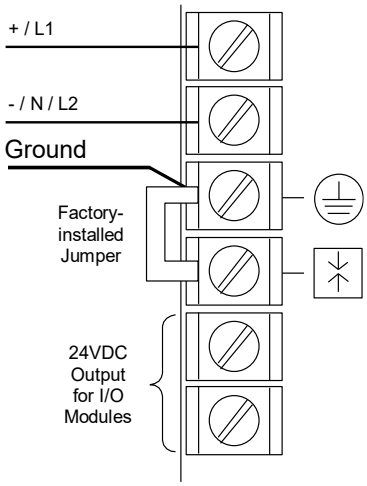

⚠ WARNING

If the same external DC power source is used to provide power to two or more power supplies in the system, connection polarity must be identical at each RX3i power supply. A resulting difference in potential can injure personnel or cause damage to equipment. Also, each backplane must be connected to a common system ground.

The bottom two terminals of the power supply terminal strip provide output connections to the Isolated +24 Vdc. This output can be used to provide power for external circuits (within limitations of the power supply).

⚠CAUTION

If the Isolated 24 Vdc supply is overloaded or shorted, the PLC will stop operation

Input Overvoltage Protection: PWR321

Terminal 4 is normally connected to frame ground (terminal 3) with a factory-installed jumper strap, as shown in Figure 120. If overvoltage protection is not required or is supplied upstream, this feature can be disabled by removing the jumper.

To Hi-pot test this supply, overvoltage protection must be disabled during the test by removing the terminal strip jumper. Re-enable overvoltage protection after testing by reinstalling the strap.

In systems with a floating neutral input (Figure 83 - the neutral line is not referenced to Protective Earth Ground), this jumper must NOT be installed. In a floating neutral system, voltage surge protection devices such as MOVs **must** be installed from L1 to earth ground, and from L2 (Neutral) to earth ground, as discussed in Special Instructions for Floating Neutral Systems, Section 4.3.1.

Figure 120: Overvoltage Protection for PWR321

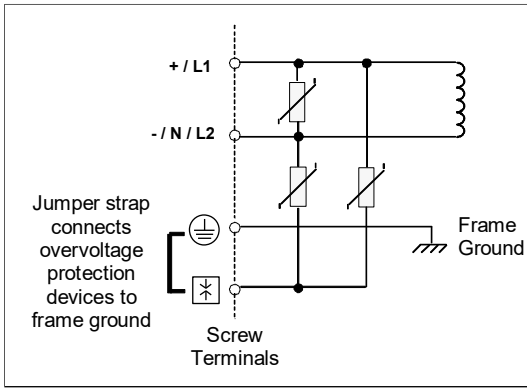

4.10 Power Supply, 120/240 Vac or 125 Vdc High Capacity: IC694PWR330

High-Capacity Power Supply IC694PWR330 is rated for 30 W. It allows all 30 W to be consumed from the +5 Vdc output. This power supply operates from an input voltage source in the range of 85 to 264 Vac or 100 to 300 Vdc.

PWR330 Power supplies provide the following outputs:

- +5 Vdc output
- Relay +24 Vdc which provides power to circuits on Output Relay modules
- Isolated +24 Vdc, which is used internally by some modules, can also be used to provide external power for 24 Vdc Input modules

Power Supply IC694PWR330 must be installed in an Expansion backplane in an RX3i system. The battery backup and serial port functions are not available in Expansion Backplanes.

Figure 121: IC694PWR330

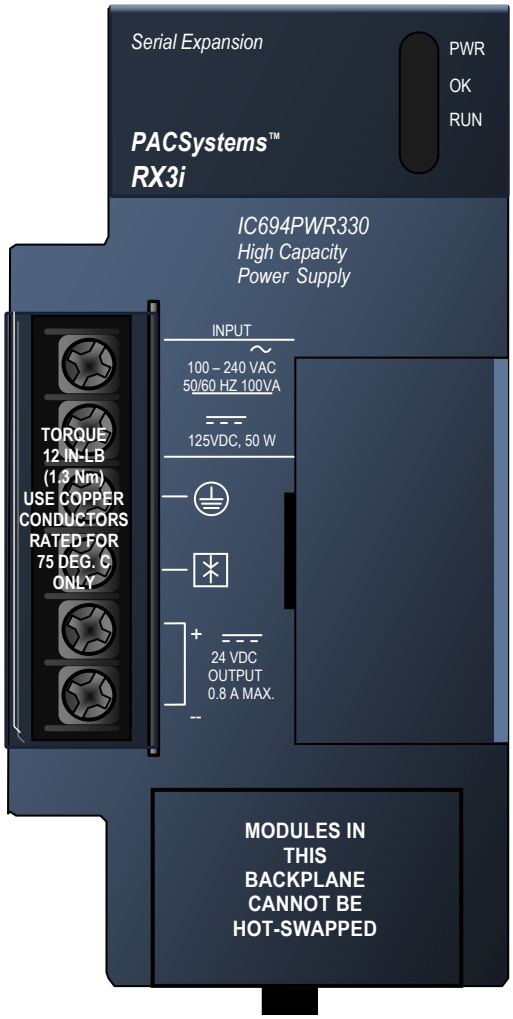

LEDs

The green PWR LED shows the operating state of the Power Supply. PWR is ON when the power supply has a correct source of power and is operating properly. It is OFF when a Power Supply fault occurs, or power is not applied.

The green OK LED is steady ON if the PLC is operating properly. It is OFF if a problem is detected by the PLC.

The green RUN LED is ON when the PLC is in Run mode.

4.10.2 Specifications: PWR330

PWR330	Specifications
Nominal Rated Voltage	120/240 Vac or 125 Vdc
Input Voltage Range	85 Vac to 264 Vac 100 Vdc to 300 Vdc
Input Power (Maximum with Full Load)	100 VA with Vac Input 50 W with Vdc Input
Inrush Current[17]	4 A peak, 250 ms maximum
Output Power	5 Vdc: 30 W maximum 24 Vdc Relay: 15 W maximum 24 Vdc Isolated: 20 W maximum ***NOTE:*** *30 W maximum total (all three outputs)*
Output Voltage	5 Vdc: 5.0 to 5.2 Vdc (5.1 Vdc nominal) 24 Vdc Relay: 24 to 28 Vdc 24 Vdc Isolated: 21.5 to 28 Vdc
Isolation (input to backplane)	1500 Vac (for 1 minute)
Protective Limits Overvoltage: Overcurrent:	 5 Vdc output: 6.4 to 7 Vdc 5 Vdc output: 7 A maximum

Overcurrent Protection

The 5 Vdc output is electronically limited to 7 A. If an overload (including short circuits) occurs, it is sensed internally, and the power supply shuts down. The power supply continually tries to restart until the overload condition is removed. An internal replaceable fuse in the input line is provided as a backup. The power supply usually shuts down before the fuse blows. The fuse also protects against internal supply faults.

⚠ WARNING

The door of the power supply module must be closed. During normal operation with an AC power source, either 120 Vac or 240 Vac is present on the AC Power Supply. The door protects against accidental shock hazards that could cause severe or fatal injury to personnel.

[17] *The Inrush Current specification is given as a guide for sizing the external power source for the IC695PWR330. Peak inrush current may be higher for shorter durations.*

4.10.3 Field Wiring: PWR330

AC Power Source Connections

The Hot, Neutral, and Ground wires from the 120 Vac power source or L1, L2, and Ground wires from the 240 Vac power source connected to the top three terminals on the Power Supply.

DC Power Source Connections

Connect the + and - wires from the 125 Vdc power source to the top two terminals. These connections are not polarity-sensitive on Power Supply PWR330.

Figure 122: Field Wiring for PWR330

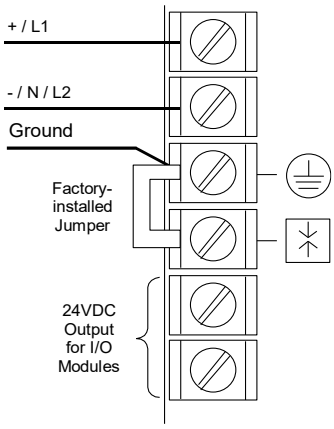

⚠ WARNING

For UL 61010 system certification these units are considered Basic insulation, supplemental insulation will be required for accessible circuits powered by this supply or be restricted to only use Class 1 wiring methods.

If the same external DC power source is used to provide power to two or more power supplies in the system, connection polarity must be identical at each RX3i power supply. A resulting difference in potential can injure personnel or cause damage to equipment. Also, each backplane must be connected to a common system ground.

The bottom two terminals of the power supply terminal strip provide output connections to the Isolated +24 Vdc. This output can be used to provide power for external circuits (within the power limitations of the supply).

⚠ CAUTION

If the Isolated 24 Vdc supply is overloaded or shorted, the PLC will stop operation

Input Overvoltage Protection

Terminal 4 is normally connected to frame ground (terminal 3) with a factory-installed jumper strap. If overvoltage protection is not required or is supplied upstream, this feature can be disabled by removing the jumper.

To Hi-pot test this supply, overvoltage protection must be disabled during the test by removing the terminal strip jumper. Re-enable overvoltage protection after testing by reinstalling the strap.

Figure 123: Overvoltage Protection for PWR330

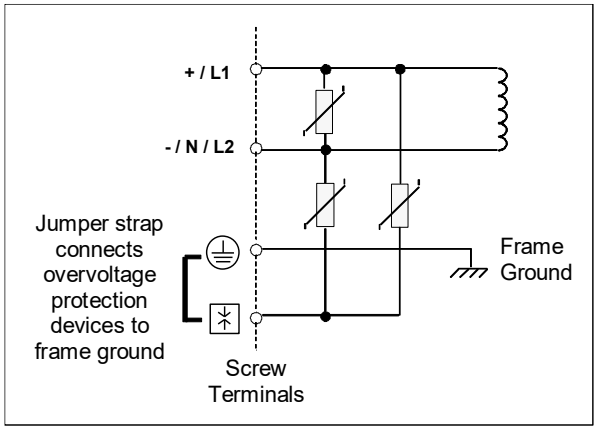

In systems with a floating neutral input (Figure 83 - the neutral line is not referenced to Protective Earth Ground), this jumper must NOT be installed. In a floating neutral system, voltage surge protection devices such as MOVs **must** be installed from L1 to earth ground, and from L2 (Neutral) to earth ground, as discussed in Special Instructions for Floating Neutral Systems, Section 4.3.1.

4.11 Power Supply, 24 Vdc High-Capacity: IC694PWR331

High Capacity Power Supply IC694 PWR331 is rated for 30 W output. For applications requiring greater +5 Vdc current capacity than is available with a standard supply (PWR321), a High-Capacity Power Supply allows all 30 W to be consumed from the +5 Vdc supply. This supply can operate from an input voltage source in the range of 12 Vdc to 30 Vdc. Although it is capable of maintaining all outputs within specifications with input voltages as low as 12 Vdc, it requires an initial input voltage of 18 Vdc to start up.

PWR331 Power supplies provide the following outputs:

- +5 Vdc output
- Relay +24 Vdc, which provides power to circuits on Output Relay modules
- Isolated +24 Vdc, which is used internally by some modules, can also be used to provide external power for 24 Vdc Input modules

Power Supply IC694PWR331 must be installed in an Expansion backplane in an RX3i system. The battery backup and serial port functions are not available in Expansion Backplanes.

Figure 124: IC694PWR331

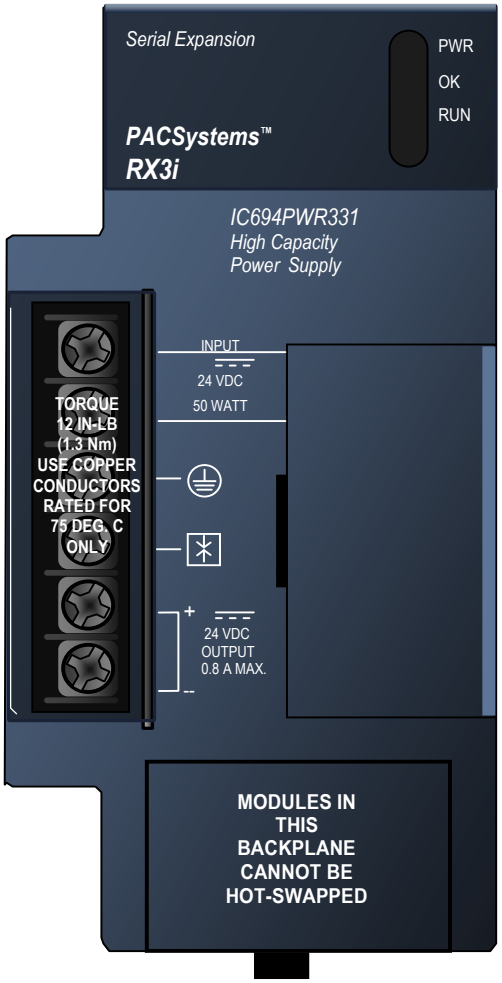

LEDs

The green PWR LED shows the operating state of the Power Supply. PWR is ON when the power supply has a correct source of power and is operating properly. It is OFF when a power supply fault occurs, or power is not applied.

The green OK LED is steady ON if the PLC is operating properly. It is OFF if a problem is detected by the PLC.

The green RUN LED is ON when the PLC is in Run mode.

4.11.2 Specifications: PWR331

PWR331	Specifications
Nominal Rated Voltage	24 Vdc
Input Voltage Range Start Run	 18 to 30 Vdc 12 to 30 Vdc
Input Power	50 W maximum at full load
Inrush Current[18]	4 A peak, 100 ms, maximum
Output Power	5 Vdc: 30 W maximum (De-rate per Figure 125) 24 Vdc Relay: 15 W maximum 24 Vdc Isolated: 20 W maximum *NOTE: 30 W maximum total (all three outputs)*
Output Voltage	5 Vdc: 5.0 to 5.2 Vdc (5.1 Vdc nominal) 24 Vdc Relay: 19.2 to 28.8 Vdc 24 Vdc Isolated: 19.2 to 28.8 Vdc
Isolation (input to backplane)	1500 Vac (for 1 minute)
Protective Limits Overvoltage: Overcurrent;	 5 Vdc output: 6.4 to 7 Vdc 5 Vdc output: 7 A maximum
Ride-through Time:	10 ms minimum. This is the length of time the power supply maintains valid outputs if the power source is interrupted
Fuse	5 A, part number 44A724627-114. Refer to Section 2.6.4, *Module Fuse List*.

[18] *The Inrush Current specification is given as a guide for sizing the external power source for the IC695PWR331. Peak inrush current may be higher for shorter durations.*

Thermal Derating: PWR331

Figure 125: Thermal Derating Curve for 5 Vdc Output PWR331

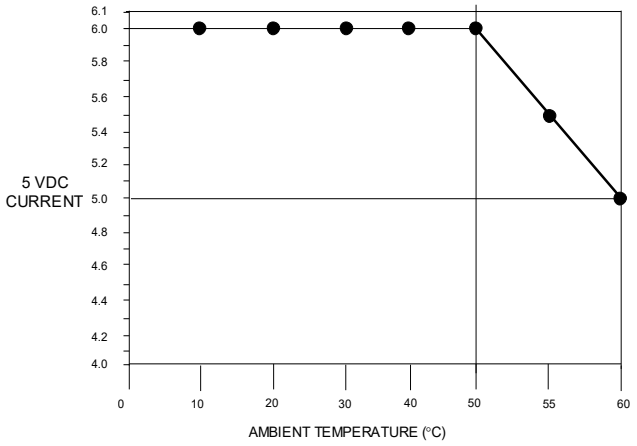

Overcurrent Protection: PWR331

The 5 Vdc output is electronically limited to 7 A. If an overload (including short circuits) occurs, it is sensed internally, and the power supply shuts down. The power supply continually tries to restart until the overload condition is removed. An internal replaceable fuse in the input line is provided as a backup. The power supply usually shuts down before the fuse blows. The fuse also protects against internal supply faults.

Calculating Input Power Requirements: PWR331

Use the following procedure to determine input power requirements for the 24 Vdc High Capacity Power Supply:

- Determine total output power load from typical specifications listed for individual modules in this chapter
- Multiply the output power by 1.5 to determine the input power value
- Divide the input power value by the operating source voltage to determine the
  input current requirements
- Use the lowest input voltage to determine the maximum input current
- Allow for start-up surge current requirements

- Allow margins (10% to 20%) for variations

4.11.4 Field Wiring: PWR331

The (+) positive wire connects to the top terminal screw, and the - wire connects to the second. These connections are polarity-sensitive for PWR331. Ground connects to the third screw.

⚠ WARNING

If the same external DC power source is used to provide power to two or more power supplies in the system, connection polarity must be identical at each power supply. Do not cross the Positive (+) and Negative (-) lines. A resulting difference in potential can injure personnel or cause damage to equipment. Also, each backplane must be connected to a common system ground.

The bottom two terminals of the power supply terminal strip provide connections to the Isolated +24 Vdc output. This output can be used to provide power for external circuits (within the power limitations of the supply).

⚠ CAUTION

If the Isolated 24 Vdc supply is overloaded or shorted, the PLC will stop operation.

Figure 126: Field Wiring for PWR331

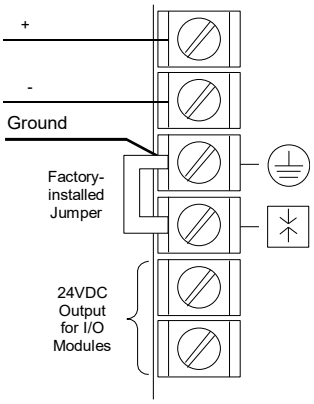

Input Overvoltage Protection

Terminal 4 is normally connected to frame ground (terminal 3) with a factory-installed jumper strap, as shown in Figure 127. If overvoltage protection is not required or is supplied upstream, this feature can be disabled by removing the jumper.

To Hi-pot test this supply, overvoltage protection must be disabled during the test by removing the terminal strip jumper. Re-enable overvoltage protection after testing by reinstalling the jumper.

Figure 127: Overvoltage Protection for PWR331

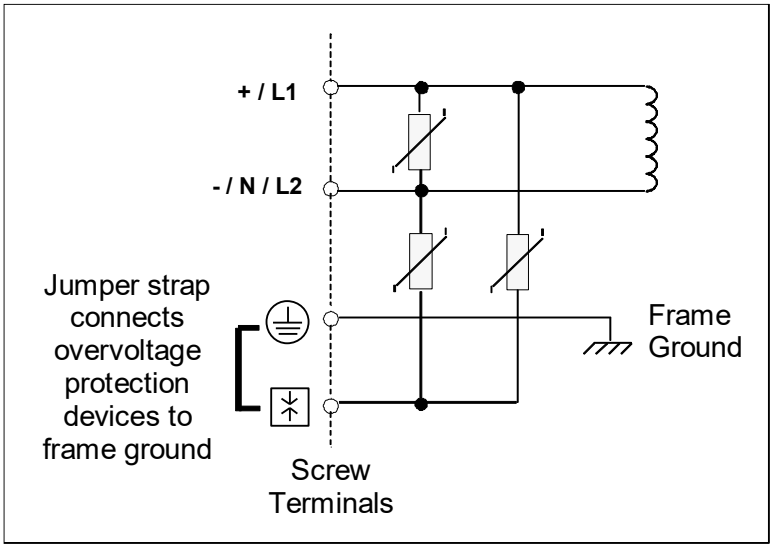

Section 5: Serial Bus Transmitter & Expansion Cables

This chapter describes the serial expansion module and expansion cables for PACSystems RX3i controllers. It also gives specifications for building custom expansion cables.

Description	Catalog Number	Section
Serial Bus Transmitter Module	IC695LRE001	5.1
Expansion Cable, Wye, 1 m (3 ft) Length	IC693CBL300	5.2.2
Expansion Cable, Wye, 2 m (6 ft)	IC693CBL301	5.2.2
Expansion Cable, 2 Connectors, Built-in Terminating Resistor, 15 m (50 ft)	IC693CBL302	0
Expansion Cable, Wye, 0.15 m (0.5 ft)	IC693CBL312	5.2.2
Expansion Cable, Wye, 8 m (25 ft)	IC693CBL313	5.2.2
Termination Resistor Pack	IC693ACC307	5.3.3

5.1 Serial Bus Transmitter Module: IC695LRE001

Figure 128: IC695LRE001

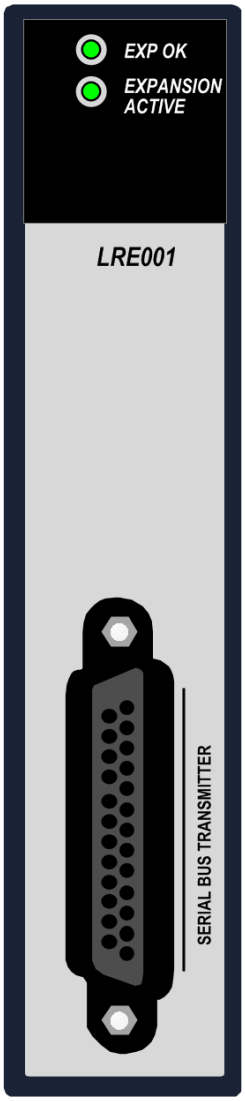

The ***RX3i Serial Bus Transmitter*** Module, IC695LRE001, provides communications between a PACSystems RX3i Universal Backplane (IC695-model number), and serial expansion, and remote backplanes (IC694- or IC693-model numbers). It converts the signal levels present in the Universal Backplane to the signal levels required by a Serial Expansion Backplane.

The Serial Bus Transmitter Module must reside in the special expansion connector on the right end of the Universal Backplane.

Two green LEDs indicate the operating status of Module and the status of the expansion link.

- The EXP OK LED is lit when backplane 5 Vdc power is applied to Module.
- The Expansion Active LED indicates the status of the expansion bus. This LED is ON when the Expansion module is communicating with expansion backplanes. It is OFF when they are not communicating.

The connector on the front of Module is used to attach the expansion cable.

5.1.1 Specifications: LRE001

LRE001	Specifications
Current Required from Backplane	5.0 Vdc: 132 mA 3.3 Vdc: 0 mA
Maximum Total Expansion Cable Length	15 m (50 ft) – Expansion Backplanes 213 m (700 ft) – Remote Backplanes
Effective Data Rate	500 k Bytes per second if the expansion bus includes Remote backplanes
Electrical Isolation	Non-isolated differential communications

For product standards and general specifications, refer to Appendix A:.

5.1.2 Expansion Module Installation

The Serial Bus Transmitter Module (LRE001) resides in the special expansion connector located on the right-hand end of the 12- or 16-slot RX3i Universal Backplane. It does not latch into the backplane. Secure LRE001 with the captive screws supplied (Figure 129).

This module may NOT be hot-inserted in the backplane; power must be removed before installing or removing the Expansion Module. Also, the expansion cable may not be attached or removed while the expansion rack has power applied.

Figure 129: Install LRE001 in Rightmost Connector & Secure with Captive Screws

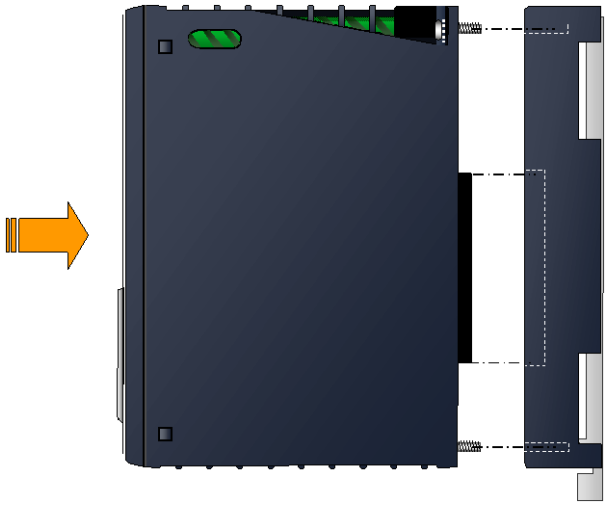

5.1.3 Powering Down Individual Expansion or Remote Backplanes

Expansion and Remote Backplanes can be powered down individually without affecting the operation of other backplanes; however, powering off a backplane generates a loss of module (LOSS_OF_MODULE) fault in the PLC Fault Table for each module in the backplane. When this fault condition occurs, and until the backplane is powered back on and all modules recovered, the lost I/O modules are not scanned.

5.2 I/O Bus Expansion Cables: IC693CBL300, 301, 302 ,312, 313

I/O Bus Expansion Cables are used to connect a Serial Bus Transmitter Module, IC695LRE001, in a Universal Backplane (IC695CHS012 or IC695CHS016) to a Serial Expansion Backplane (IC694CHS392, IC694CHS398, IC693CHS392 or IC693CHS398).

These cables are also used to interconnect additional expansion and remote backplanes (as listed above) in the RX3i system.

Several lengths and configurations of prefabricated cables are available (part numbers IC693CBL300, IC693CBL301, IC693CBL302, IC693CBL312, and IC693CBL313), as described in this section.

The prefabricated cables described in this section are made with a *continuous*, 100% shield. The braided cable shield is connected to the metal shell of the connector around the entire perimeter of the connector. That provides a low-impedance path to frame ground for any noise energy that is coupled onto the cable shield.

5.2.1 Cable with Two Connectors: IC693CBL302

Cable IC693CBL302 (shown in Figure 130) is 15 meters (50 feet) long and has one male connector on each end. This cable has I/O bus terminating resistors built into the end connector on the cable.

Figure 130: Cable IC693CBL302

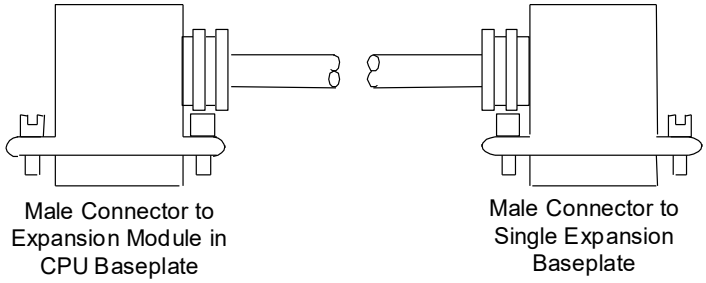

This cable does not require a separate termination block. It can only be used in a system with just one expansion backplane.

Figure 131: Cable IC693CBL302 Usage

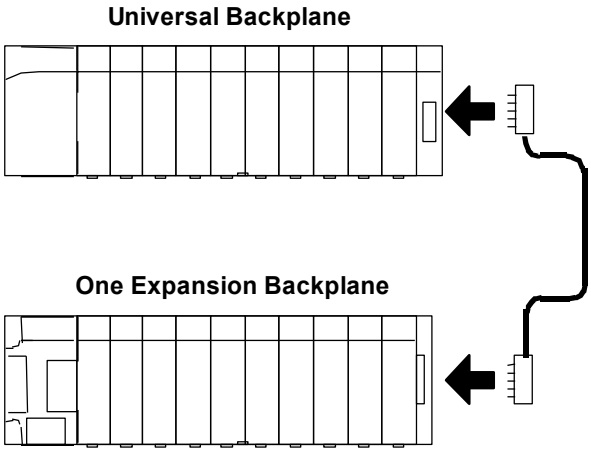

5.2.2 Cables with Three Connectors: IC693CBL300, 301, 312, 313

Cables IC693CBL300, IC693CBL301, IC693CBL312, and IC693CBL313 (shown in Figure 132) have a male and female connector on one end and a male connector on the other end ("wye" cables).

Figure 132: Cables IC693CBL300, IC693CBL301, IC693CBL312, or IC693CBL313

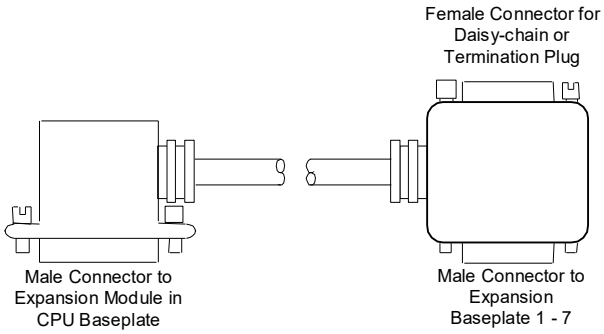

These cables are the same except for their lengths:

- IC693CBL312: 0.15 m (0.5 ft)
- IC693CBL300: 1 m (3 ft)
- IC693CBL301: 2 m (6 ft)
- IC693CBL313: 8 m (25 ft)

Combinations of these cables can be used to daisy-chain up to seven expansion backplanes to the main backplane (Figure 133). Custom cables can also be made. The wiring information is given in this section.

These cables can also be used to provide connection points for custom point-to-point cables (IC693CBL300 is often used for this).

These cables do not have built-in termination. The last cable in the expansion system must be terminated as displayed in the bottom right of Figure 133. Terminator Plug IC693ACC307 can be used for this purpose.

Figure 133: Usage of Wye Cables with Terminating Plug

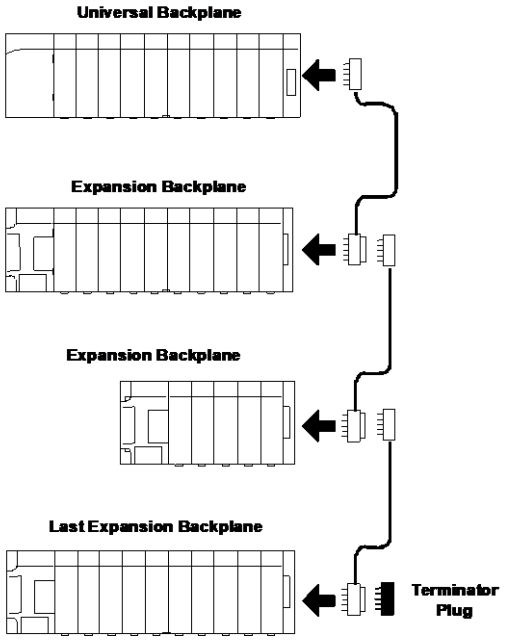

The maximum number of cables that can be included in an I/O expansion system is seven, and the total maximum cable length between the Universal Backplane and the last expansion backplane is 15 m (50 ft). Failure to observe these limits could result in erratic system operation.

5.3 Specifications: IC693CBL300, 301, 302, 312, 313

Subject	Description
Cable	Belden 8107 only (no substitutes): Computer cable, overall braid over foil shield, twisted–pair 30 V/80°C (176°F) 24 AWG (0.22 mm^2) tinned copper, 7 x 32 stranding Velocity of propagation = 70% Nominal impedance = 100 Ω
25-Pin Male Connector	Crimp Plug = Amp 207464–7; Pin = Amp 66506–9 Solder Plug = Amp 5-747912–2
25-Pin Female Connector	Crimp Receptacle = Amp 207463–1; Pin = Amp 66504–9 Solder Receptacle = Amp 5-747913–2
Connector Shell	Kit – Amp 5745833–5: Metal–plated plastic (plastic with nickel over copper) Crimp ring – Amp 745508–1, split ring ferrule

Connector part numbers are provided for reference only. Any part meeting the same specifications could be used for making custom cables.

5.3.1 Expansion Port Pin Assignments

All connections between cables are point–to point, that is, pin 2 of one end to pin 2 of the opposite end, pin 3 to pin 3, and such.

Pin Number	Signal Name	Function	Termination Pairings
16	DIODT	I/O Serial Data Positive	}
17	DIODT/	I/O Serial Data Negative	
24	DIOCLK	I/O Serial Clock Positive	}
25	DIOCLK/	I/O Serial Clock Negative	
20	DRSEL	Remote Select Positive	}
21	DRSEL/	Remote Select Negative	
12	DRPERR	Parity Error Positive	}
13	DRPERR/	Parity Error Negative	
8	DRMRUN	Remote Run Positive	}
9	DRMRUN/	Remote Run Negative	
2	DFRAME	Cycle Frame Positive	}
3	DFRAME/	Cycle Frame Negative	
1	FGND	Frame Ground for Cable Shield	
7	0V	Logic Ground	

The I/O expansion bus *must be terminated* at the last backplane in an expansion system. Each signal pair must be terminated with 120Ω, ¼-watt resistors wired between the appropriate pins, as indicated by the brackets above:

16 – 17; 24 – 25; 20 – 21; 12 – 13; 8 – 9; 2 – 3.

5.3.2 Building Custom Cables

For custom length cables, the best noise immunity is achieved when using a metalized connector cover that makes contact with the braided wires and foil shield in the cable and with the connector shell on the terminating end. *It is not sufficient* to only solder the drain wire to the connector shell. The shield must be continuous across the entire length of the cable, including at the terminations.

When using 100% shielded cables all CPU and expansion backplanes in the system must be solidly referenced to the same ground point or a potential difference between backplanes could disturb signal transmission.

Use the following steps to build a 100% shielded cable:

1. Strip approximately 5/8 inch of insulation from the cable to expose the shield.
2. Put a split–ring ferrule over the cable insulation.
3. Fold the shield back over the top of the cable insulation and ferrule.

Figure 134: Construction of a Custom Shielded Cable

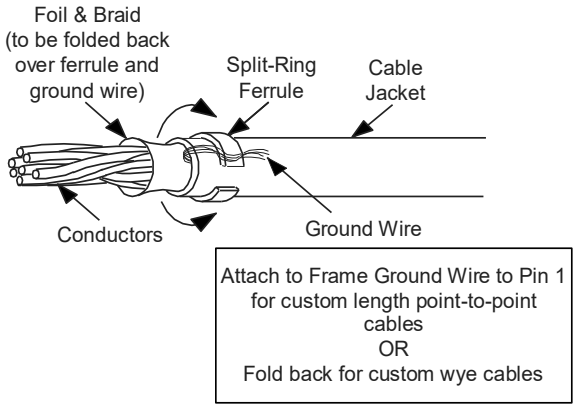

4. Place the collar of the metal hood over the top of the folded shield, and securely clamp the hood.
5. Test the cable for continuity between both connector shells. Connect an ohmmeter between the shells and flex the cable at both ends. If the metallic connector hood is not making proper contact with the cable shield at either end, the connection will show intermittent continuity on the ohmmeter.

6. Plug the metal hooded cable into an expansion port and securely tighten the two screws. Installing and tightening the screws electrically connects the shield to the backplane frame ground, which should be connected to earth ground.

Cable with Continuous Shielding

Figure 135: Wiring Diagram - Cable with Continuous Shielding

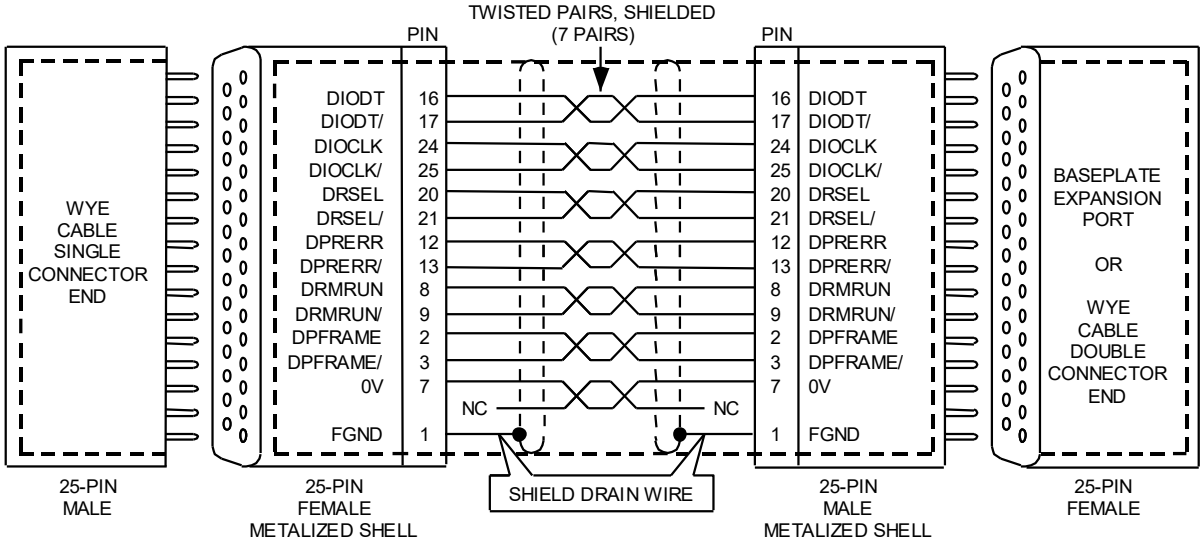

NOTE:
Bold dashed line shows continuous (100%) shielding when metallized shell connectors are plugged together.

Cable for Applications Requiring Less Noise Immunity

Figure 136: Wiring Diagram - Cable without Continuous Shielding

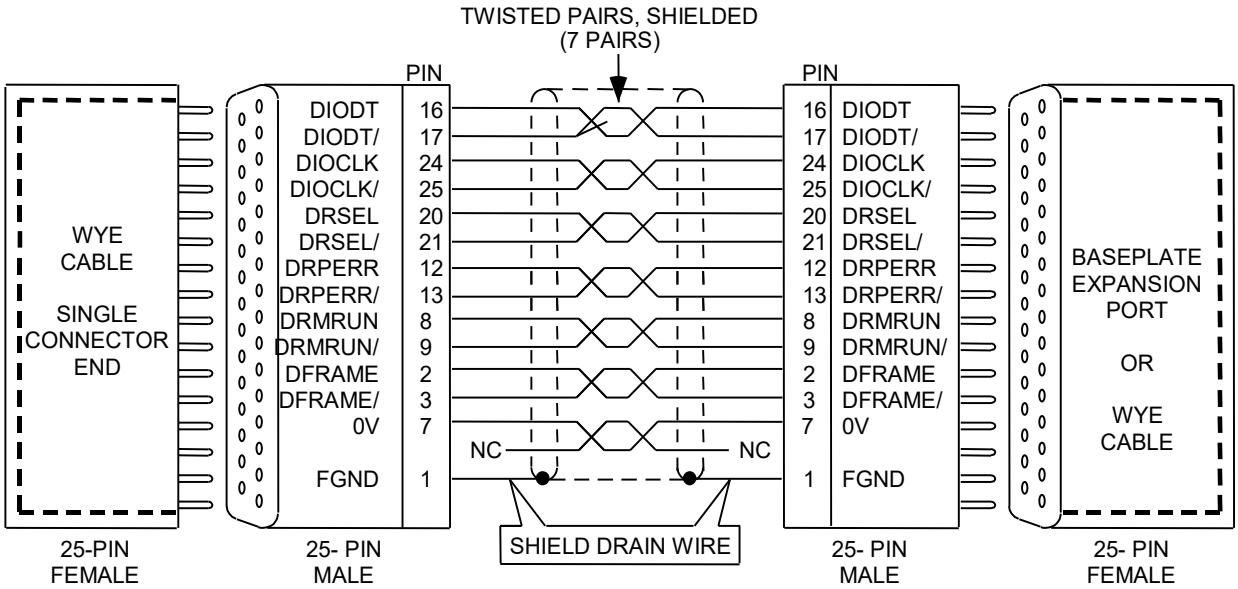

5.3.3 Termination Requirement for Expansion or Remote System

When two or more backplanes are connected via the I/O Bus Expansion System, the I/O Expansion Bus must be properly terminated. The most common method of terminating the I/O Expansion Bus is by installing a termination resistor pack (IC693ACC307) on the open connector on the last (i.e. most distant from the CPU) expansion or remote backplane in the system.

The resistor pack is physically mounted inside of a connector. Although a termination resistor pack is shipped with each backplane, only the last backplane in the chain needs to have this termination connector installed. Unused termination packs may be discarded. The prewired 50 ft (15 m) cable (IC693CBL302) has termination resistors wired inside the connector on one end of the cable. This cable can be used if only one expansion rack is needed in a system and a 50-foot cable link is required (the IC693ACC307 resistor pack is not needed in this case). Also, a

custom-built cable with built-in resistors would eliminate the need for the IC693ACC307 resistor pack.

Section 6: Discrete Input Modules

This chapter describes discrete input modules for PACSystems RX3i systems.

Discrete Input Module Description	Catalog Number	Section
Input 120 Vac 8-Pt Isolated	IC694MDL230	6.1
Input 240 Vac 8-Pt Isolated	IC694MDL231	6.2
Input 120 Vac 16-Pt	IC694MDL240	6.3
Input 24 Vac/Vdc 16-Pt Pos/Neg Logic	IC694MDL241	6.4
Input 120 Vac 16-Pt Isolated	IC694MDL250	6.5
Input 120 Vac 32-Pt Grouped	IC694MDL260	6.6
Input 125 Vdc 8-Pt Pos/Neg Logic	IC694MDL632	6.7
Input 24 Vdc 8-Pt Pos/Neg Logic	IC694MDL634	6.8
Input 125 Vdc 16-Pt Pos/Neg Logic	IC694MDL635	6.9
Input 24 Vdc 16-Pt Pos/Neg Logic	IC694MDL645	6.10
Input 24 Vdc 16-Pt Pos/Neg Logic Fast	IC694MDL646	6.11
Input 48 Vdc, 16-Pt Isolated Pos/Neg Logic	IC694MDL648	6.12
Input 5/12 Vdc (TTL) 32-Pt Pos/Neg Logic	IC694MDL654	6.13
Input 24 Vdc 32-Pt Pos/Neg Logic	IC694MDL655	6.13
Input 48 Vdc 32-Pt Pos/Neg Logic	IC694MDL658	6.13
Input 24 Vdc 32-Pt Pos/Neg Logic	IC694MDL660	6.14
Input 24 Vdc 16-Pt Pos Logic with Diagnostics	IC695MDL664	0
Input Simulator Module	IC694ACC300	6.16

6.1 Input Module, 120 Vac, 8-Point Isolated: IC694MDL230

Figure 137: IC694MDL230

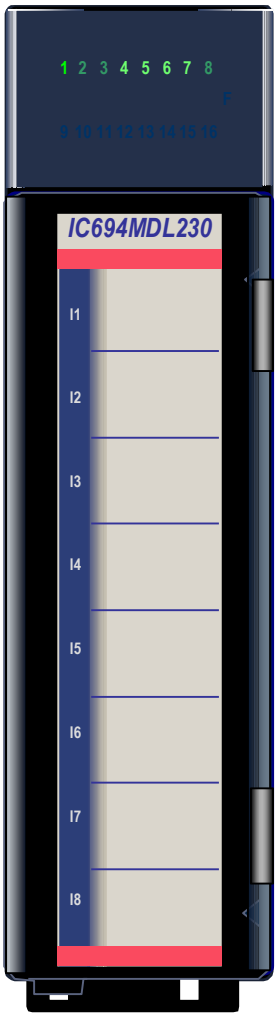

The ***120 Vac Isolated Input*** module, IC694MDL230, provides eight isolated input points, each with a common power input terminal. Because the inputs are isolated, each input can be powered by a separate AC power source.

The input circuits are reactive (resistor/capacitor) inputs. Current passing into an input point results in a logic 1 in the input status table (%I). Input characteristics are compatible with a wide range of input devices, such as pushbuttons, limit switches, and electronic proximity switches. Power to operate the field devices must be supplied by the user. This module requires an AC power source; *it cannot be used with a DC power source.*

Eight green LEDs indicate the ON/OFF status of points 1 through 8. The red bands on the label show that MDL230 is a high-voltage module.

This module can be installed in any I/O slot in an RX3i system.

Module supports insertion into and removal from an RX3i Universal Backplane which is under power. Refer to Section 2.6.4, *Hot Insertion and Removal*.

6.1.1 Specifications: MDL230

MDL230	Specifications
Rated Voltage	120 Vac, 50/60 Hz
Input Voltage Range	0 to 132 Vac, 50/60 Hz
Inputs per Module	8 (each input point has a separate common)
Isolation:	
Field to Backplane (optical) and frame ground	250 Vac continuous; 1500 Vac for one minute
Point to Point	250 Vac continuous; 1500 Vac for one minute
Input Current	14.5 mA (typical) at rated voltage
Input Characteristics: On–state Voltage Off-state Voltage On–state Current Off-state Current On response Time Off response Time	 74 to 132 Vac 0 to 20 Vac 6 mA minimum 2.2 mA maximum 30 ms maximum 45 ms maximum
Power Consumption	60 mA (all inputs on) sourced from 5 Vdc bus on the backplane

For product standards and general specifications, refer to Appendix A:.

6.1.2 Field Wiring: MDL230

Terminals	Connections
1	No connection
2	Input 1
3	Input 1 Return
4	Input 2
5	Input 2 Return
6	Input 3
7	Input 3 Return
8	Input 4
9	Input 4 Return
10	No connection
11	No connection
12	Input 5
13	Input 5 Return
14	Input 6
15	Input 6 Return
16	Input 7
17	Input 7 Return
18	Input 8
19	Input 8 Return
20	No connection

Figure 138: Field Wiring MDL230

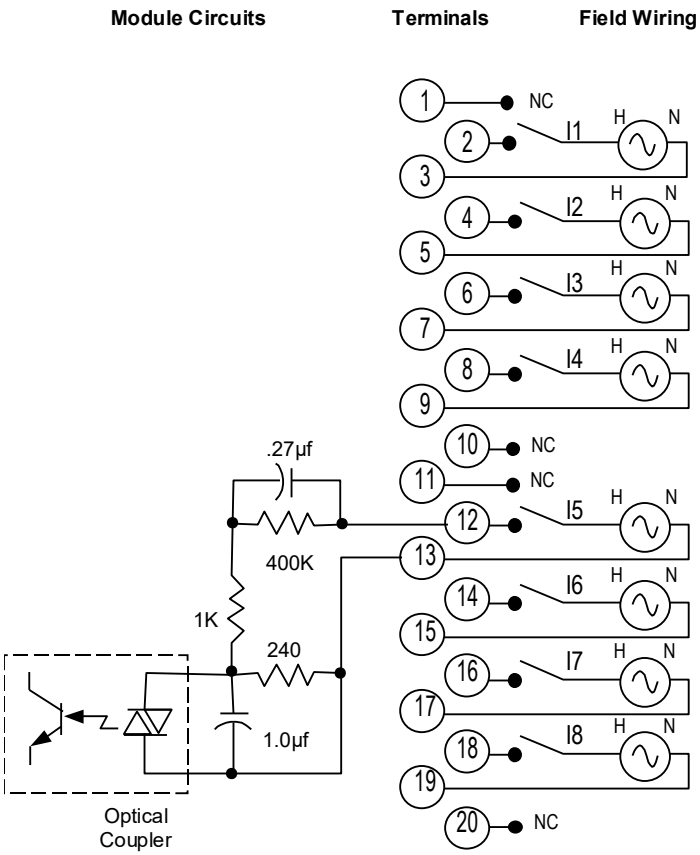

6.2 Input Module, 240 Vac, 8-Point Isolated: IC694MDL231

Figure 139: IC694MDL231

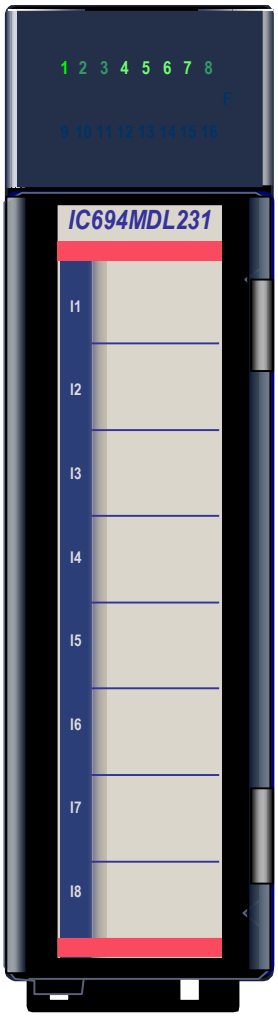

The ***240 Vac Isolated Input*** module, IC694MDL231, provides eight isolated input points, each with a common power input terminal. The input circuits are reactive (resistor/capacitor) inputs. Current passing into an input point results in a logic 1 in the input status table (%I). Input characteristics are compatible with a wide range of input devices, such as pushbuttons, limit switches, and electronic proximity switches.

Because the inputs are isolated, each input can be powered by a separate AC power source. Power to operate the field devices must be supplied by the user. This module requires an AC power source; *it cannot be used with a DC power source*.

Eight green LEDs indicate the ON/OFF status of points 1 through 8. The red bands on the label show that MDL231 is a high-voltage module.

This module can be installed in any I/O slot in an RX3i system.

Module supports insertion into and removal from an RX3i Universal Backplane which is under power. Refer to Section 2.6.4, *Hot Insertion and Removal*.

6.2.1 Specifications: MDL231

MDL321	Specifications
Rated Voltage	240 Vac, 50/60 Hz
Input Voltage Range	0 to 264 Vac, 50/60 Hz
Inputs per Module	8 (each input point has a separate common)
Isolation:	
Field to Backplane (optical) and frame ground	250 Vac continuous; 1500 Vac for one minute
Point to Point	250 Vac continuous; 1500 Vac for one minute
Input Current	15 mA (typical) at rated voltage
Input Characteristics: On–state Voltage Off-state Voltage On–state Current Off-stateCurrent On response Time Off response Time	 148 to 264 Vac 0 to 40 Vac 6 mA minimum 2.2 mA maximum 30 ms maximum 45 ms maximum
Power Consumption	60 mA (all inputs on) from 5 Vdc bus on backplane

For product standards and general specifications, refer to Appendix A:.

6.2.2 Field Wiring: MDL231

Terminals	Connections
1	No connection
2	Input 1
3	Input 1 Return
4	Input 2
5	Input 2 Return
6	Input 3
7	Input 3 Return
8	Input 4
9	Input 4 Return
10	No connection
11	No connection
12	Input 5
13	Input 5 Return
14	Input 6
15	Input 6 Return
16	Input 7
17	Input 7 Return
18	Input 8
19	Input 8 Return
20	No connection

Figure 140: Field Wiring MDL231

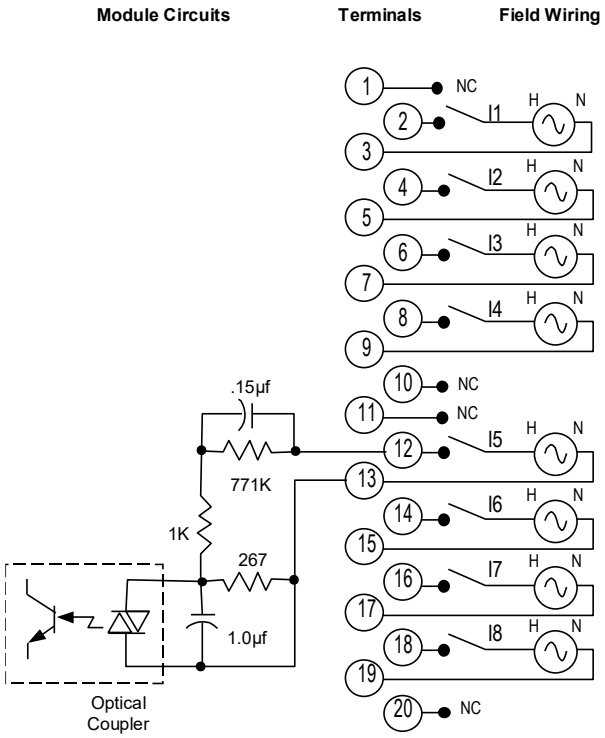

6.3 Input Module, 120 Vac, 16-Point: IC694MDL240

Figure 141: IC694MDL240

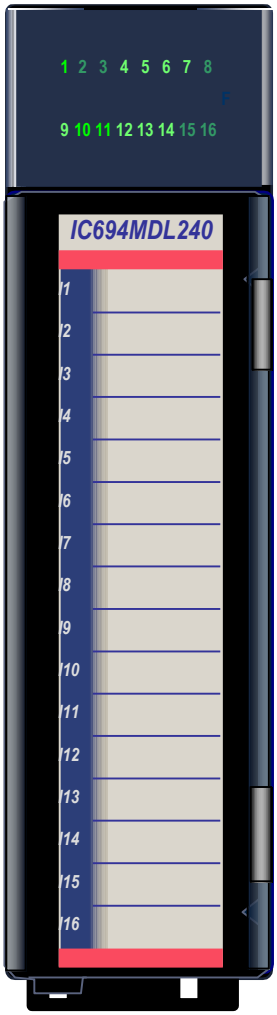

The ***120 Vac Input*** module, IC694MDL240, provides sixteen input points with one common power input terminal. The input circuits are reactive (resistor/capacitor) inputs. Current passing into an input point results in a logic 1 in the input status table (%I). Input characteristics are compatible with a wide range of input devices, such as pushbuttons, limit switches, and electronic proximity switches.

Power to operate the field devices must be supplied by the user. This module requires an AC power source; *it cannot be used with a DC power source.*

Sixteen green LEDs indicate the ON/OFF status of points 1 through 16. The red bands on the label show that MDL240 is a high-voltage module.

This module can be installed in any I/O slot in an RX3i system.

Module supports insertion into and removal from an RX3i Universal Backplane which is under power. Refer to Section 2.6.4, *Hot Insertion and Removal*.

6.3.1 Specifications: MDL240

MDL240	Specifications
Rated Voltage	120 Vac
Input Voltage Range	0 to 132 Vac, 50/60 Hz
Inputs per Module	16 (one group with a single common) The maximum number of inputs at the same time depends on the ambient temperature (Figure 142).
Isolation: Field to Backplane (optical) and frame ground	250 Vac continuous; 1500 Vac for one minute
Input Current	12 mA (typical) at rated voltage
Input Characteristics: On–state Voltage Off-state Voltage On–state Current Off-state Current On response Time Off response Time	 74 to 132 Vac 0 to 20 Vac 6 mA minimum 2.2mA maximum 30 ms maximum 45 ms maximum
Power Consumption	90 mA (all inputs on) from 5 Vdc bus on the backplane

For product standards and general specifications, refer to Appendix A:.

6.3.2 Thermal Derating: MDL240

Figure 142: Thermal Derating MDL240

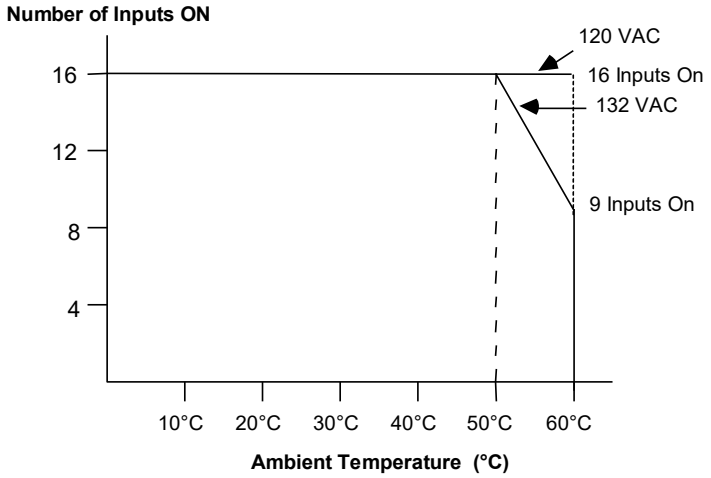

6.3.4 Field Wiring: MDL240

Terminals	Connections
1	Input 1
2	Input 2
3	Input 3
4	Input 4
5	Input 5
6	Input 6
7	Input 7
8	Input 8
9	Input 9
10	Input 10
11	Input 11
12	Input 12
13	Input 13
14	Input 14
15	Input 15
16	Input 16
17	No connection
18	No connection
19	Inputs 1-16 Common (Return)
20	No connection

Figure 143: Field Wiring MDL240

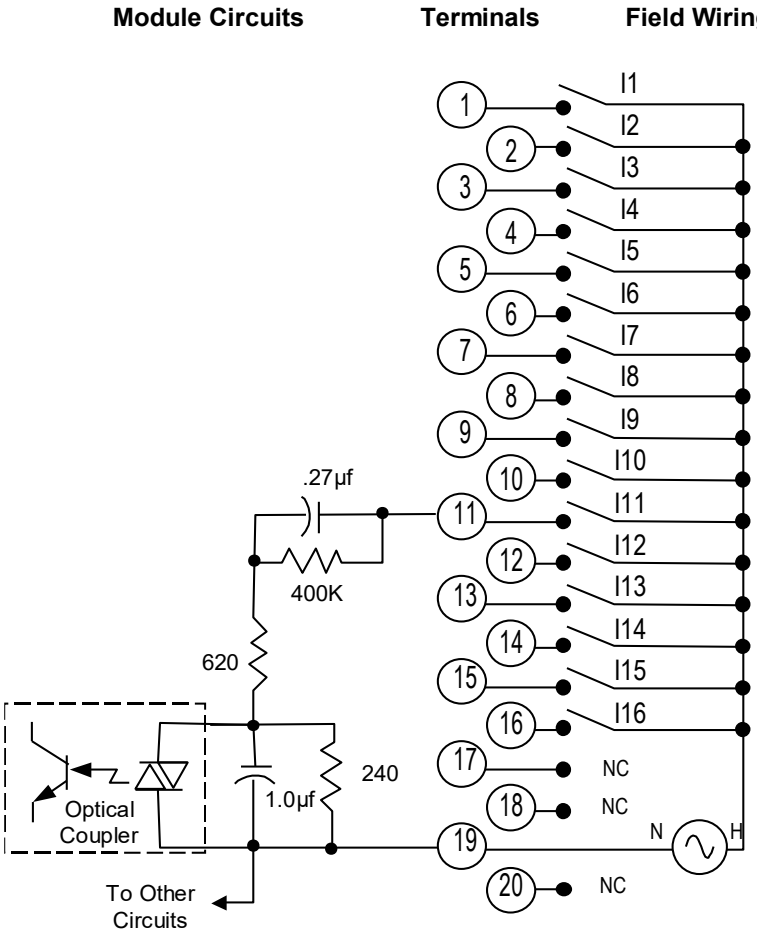

6.4 Input Module, 24 Vac/Vdc 16-Point Pos/Neg Logic IC694MDL241

Figure 144: IC694MDL241

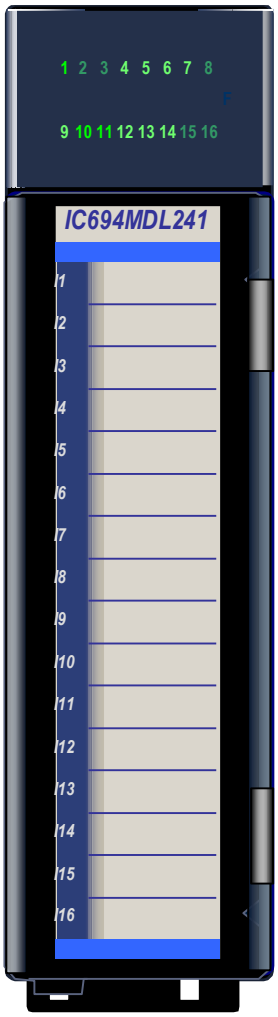

The ***24 Vac/Vdc 16-Point C Positive/Negative Logic Input*** module, IC694MDL241, provides sixteen input points in one group with a common power input terminal. This module can be used with AC or DC field inputs. In DC mode, it can be wired for either positive or negative logic. Input characteristics are compatible with a wide range of input devices, such as pushbuttons, limit switches, and electronic proximity switches. Current passing into an input point results in a logic 1 in the input status table (%I).

Power to operate AC and DC input devices must be supplied by the user.

Sixteen green LEDs indicate the ON/OFF status of points 1 through 16. The blue bands on the label show that MDL241 is a low-voltage module.

This module can be installed in any I/O slot in an RX3i system.

Module supports insertion into and removal from an RX3i Universal Backplane which is under power. Refer to Section 2.6.4, *Hot Insertion and Removal*.

6.4.1 Specifications: MDL241

MDL241	Specifications
Rated Voltage	24 Vac or 24 Vdc
Input Voltage Range	0 to +30 Vdc or 0 to +30 Vac, 50/60 Hz
Inputs per Module	16 (one group with a single common)
Isolation: Field to Backplane (optical) and frame ground	250 Vac continuous; 1500 Vac for one minute
Input Current	7 mA (typical) at rated voltage
Input Characteristics On–state Voltage Off-state Voltage On–state Current Off-state Current On response Time Off response Time	 11.5 to 30 Vac or DC 0 to +4 Vac or DC 3.2 mA minimum 1 mA maximum 12 ms typical 28 ms typical
Power Consumption: 5 Vdc	80 mA (all inputs on) from 5 Vdc bus on backplane
Power Consumption[19]: 24 Vdc	125 mA from the Isolated 24 Vdc backplane bus or user-supplied power

For product standards and general specifications, refer to Appendix A: Product Certifications and Installation Guidelines for Conformance.

[19] *If terminals 18 & 19 are employed, the following applies:*
If Module is located in an RX3i Universal Backplane, an external source of Isolated +24 Vdc is required. The external source must be connected via the TB1 connector located on the left side of the backplane.
If this module is located in an RX3i Expansion Backplane or Series 90-30 backplane, the backplane power supply provides the Isolated +24 Vdc for Module.

6.4.2 Field Wiring: MDL241

Terminal	Connections
1	Inputs 1-16 Common (Return)
2	Input 1
3	Input 2
4	Input 3
5	Input 4
6	Input 5
7	Input 6
8	Input 7
9	Input 8
10	Input 9
11	Input 10
12	Input 11
13	Input 12
14	Input 13
15	Input 14
16	Input 15
17	Input 16
18	24 Vdc for input devices
19	0 V for input devices
20	No connection

Figure 145: Field Wiring MDL241

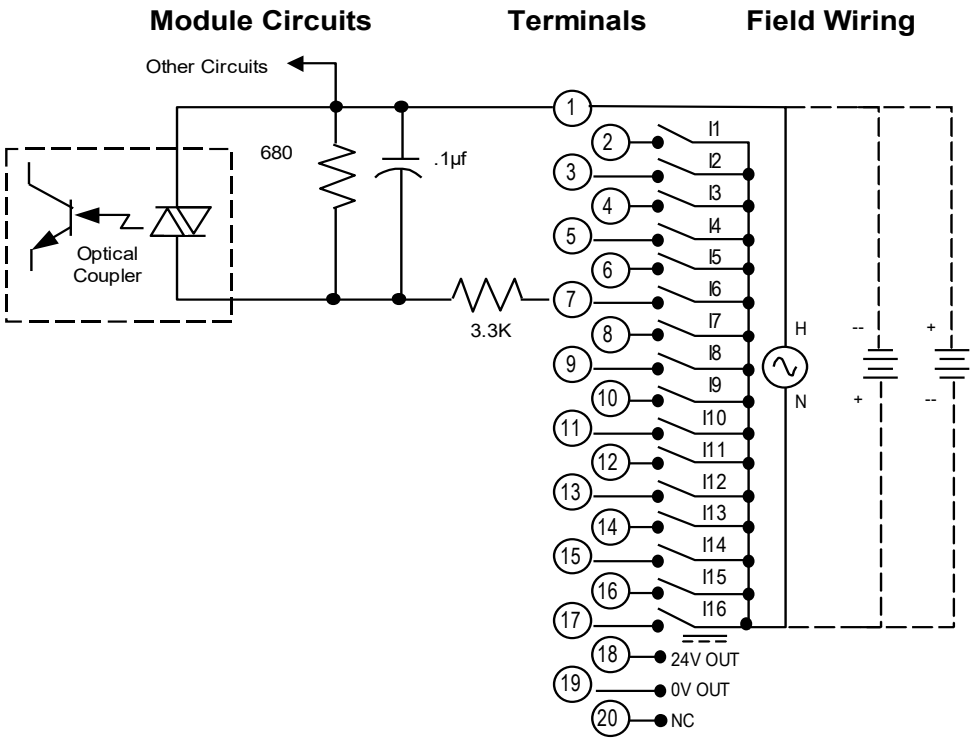

Note: If the 24 V OUT pin is used to connect to input devices in the field, the isolation specification for this module changes to:

Field to Backplane (optical) and frame ground: 50 Vac continuous; 500 Vac for 1 minute

6.5 Input Module, 120 Vac 16-Point Isolated: IC694MDL250

Figure 146: IC694MDL250

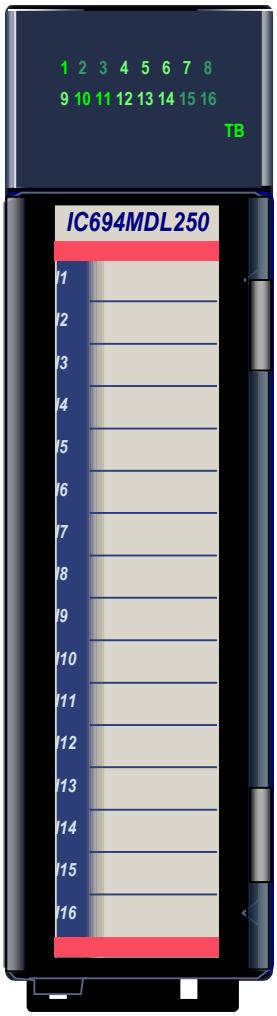

The ***120 Vac 16-Point Isolated Input*** module, IC694MDL250, provides sixteen isolated input points. Input points can be used on different phases of the AC supply or powered from the same supply. An RC snubber protects each input against transient electrical noise on the power line.

The input filtering time of Module can be changed during system operation by the application program. No DIP switch settings are required.

This module can be used with a Box-style (IC694TBB032), Extended Box-style (IC694TBB132), Spring-style (IC694TBS032), or Extended Spring-style (IC694TBS132) Terminal Block. Extended terminal blocks provide the extra shroud depth typically needed for field wiring to AC devices. Refer to Chapter 17 for more information about Terminal Blocks. Terminal Blocks are ordered separately.

Individually numbered LEDs show the ON/OFF status of each Input point. The TB LED is green when the removable terminal block of Module is locked in place. It is red when the terminal block is not locked. Module also sends an *Addition of Terminal Block* or *Loss of Terminal Block* message to the RX3i CPU to report the terminal block status.

The red bands on the door card indicate the MDL250 is a high-voltage module.

This module can be installed in any I/O slot in an RX3i system.

Module supports insertion into and removal from an RX3i Universal Backplane which is under power. Refer to Section 2.6.4, *Hot Insertion and Removal*.

Module cannot be used with a Series 90-30 PLC CPU.

6.5.1 Specifications: MDL250

MDL250	Specifications
Rated Voltage	120 Vac
Input Voltage Range	0 – 132 Vac (47 to 63 Hz), 120 Vac nom.
Inputs per Module	16 isolated
Isolation: Field to Backplane	 250 Vac continuous; 1500 Vac for 1 minute
Group to Group	250 Vac continuous; 1500 Vac for 1 minute
Input Current	7.0 mA per point (typical) at rated voltage
Input Filter Times ON response Time	20 ms – 2540 ms in 20 ms increments. Sent from CPU. 0.5, 1.0, 2.0, 5.0, 10.0, 50.0, and 100.0 ms (as per filter setting)
Power Consumption	220 mA (all inputs on) from 5 V bus on backplane
Diagnostics	Fieldside terminal block reported to RX3i CPU.
Input Characteristics: On–state Voltage Off-state Voltage On–state Current Off-state Current	 70-132 Vac 0 to 20 Vac 5 mA minimum 2.5 mA maximum
On/Off Response Time	±0-1 AC cycles for filter times up to 840 ms ±1-2 AC cycles for filter times of 840 to 1600 ms ±2-3 AC cycles for filter times of 1600 to 1920 ms ±3-4 AC cycles for filter times of 1920 ms or more

For product standards and general specifications, refer to Appendix A: Product Certifications and Installation Guidelines for Conformance.

6.5.2 Input Filter Setup: MDL250

If an input filter time should be applied to all Module inputs, input filtering should be enabled in the software configuration of Module. The Digital Filter Settings Length must be set to 16, and a memory location to be used for the filter value must be specified. Configuring a Digital Filter Settings Length of 0 disables the input filter.

During system operation, the input filter time can be changed from the programmer by entering a filter setting value from 1 to 127 decimal (1_{hex} to $7F_{hex}$) into the assigned memory location. This filter setting value is equal to the new filter time divided by 20 decimal. For example, to change the filter time to 200 ms, enter the value 10_{dec} ($0A_{hex}$) into the memory location. Some example filter times and their hexadecimal setting values are listed below.

Setting (hexadecimal)	Filter Time in ms	Setting (hexadecimal)	Filter Time in ms	Setting (hexadecimal)	Filter Time in ms
0A	200	21	660	5A	1800
0F	300	22	680	5F	1900
11	340	2A	840	71	2260
12	360	2F	940	72	2280
1A	520	51	1620	7A	2240
1F	620	52	1660	7F	2540

6.5.3 Module Status Data: MDL250

Discrete input module IC694MDL250 optionally provides sixteen bits of status data to the CPU in the assigned Module Status Reference location. By default, the configured length of this status area is 0. To access this data, the length must be changed from 0 to 16.

Module uses the lower eleven input bits to report its internal status information to the RX3i CPU, as follows:

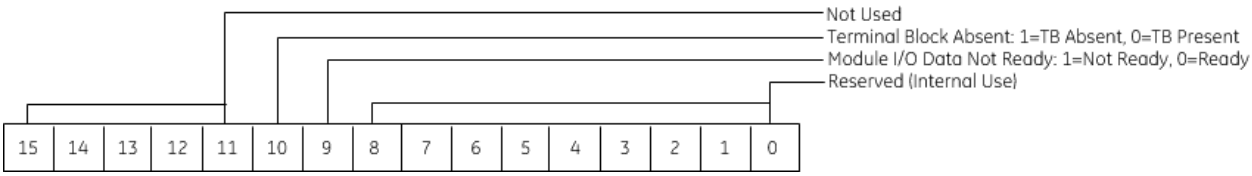

Note: the sense of bit 9 is inverted compared to most other modules. Here “1” indicates *not ready*.

6.5.5 Field Wiring: MDL250

Connections	Terminal
Input 1	1
Input 1 Return	2
Input 2	3
Input 2 Return	4
Input 3	5
Input 3 Return	6
Input 4	7
Input 4 Return	8
Input 5	9
Input 5 Return	10
Input 6	11
Input 6 Return	12
Input 7	13
Input 7 Return	14
Input 8	15
Input 8 Return	16
No connection	17
No connection	18

Figure 147: Field Wiring MDL250

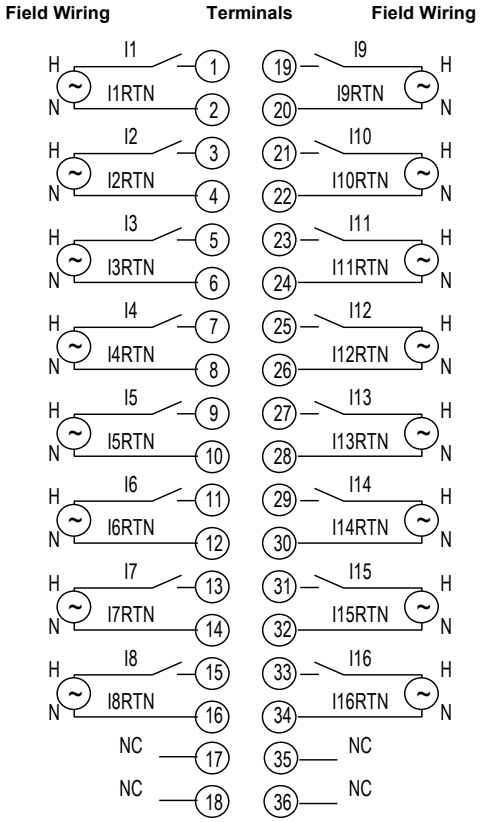

Terminal	Connections
19	Input 9
20	Input 9 Return
21	Input 10
22	Input 10 Return
23	Input 11
24	Input 11 Return
25	Input 12
26	Input 12 Return
27	Input 13
28	Input 13 Return
29	Input 14
30	Input 14 Return
31	Input 15
32	Input 15 Return
33	Input 16
34	Input 16 Return
35	No connection
36	No connection

6.6 Input Module, 120 Vac, 32-Point: IC694MDL260

Figure 148: IC694MDL260

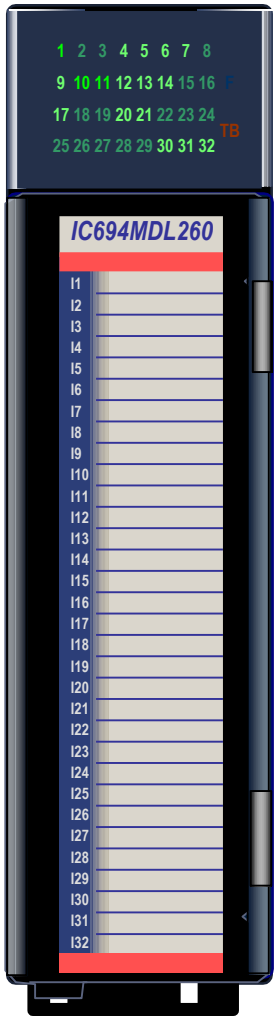

The ***120 Vac Grouped Input*** module, IC694MDL260, provides thirty-two discrete input points. The inputs are arranged in four isolated groups of eight. Isolation is provided between the four groups of inputs; however, all inputs within a group are referenced to the same user common connection.

Module MDL260 can be used with a Box-style (IC694TBB032), Extended Box-style (IC694TBB132), Spring-style (IC694TBS032), or Extended Spring-style (IC694TBS132) Terminal Block. Extended terminal blocks provide the extra shroud depth typically needed for field wiring to AC devices. Refer to Chapter 17 for more information about Terminal Blocks. The Terminal Block is ordered separately.

Input filter times can be set from the programmer using the assigned output data references of Module.

Individually-numbered LEDs indicate the ON/OFF status of points 1 through 32. The red/green TB LED is green when the removable terminal block of Module is locked in place. It is red when the terminal block is not locked. Module also sends an *Addition of Terminal Block* or *Loss of Terminal Block* message to the RX3i CPU to report the terminal block status.

The red bands on the label show that MDL260 is a high-voltage module.

This module can be installed in any I/O slot in an RX3i system.

Module supports insertion into and removal from an RX3i Universal Backplane which is under power. Refer to Section 2.6.4, *Hot Insertion and Removal*.

Module cannot be used with a Series 90-30 PLC CPU.

6.6.1 Specifications: MDL260

MDL260	Specifications
Rated Voltage	120 Vac
Input Voltage Range	0 to 132 Vac (47 to 63 Hz)
Inputs per Module	32 (four isolated groups of 8 inputs)
Input Filter Times	20 to 2540 ms in 20 ms increments. Sent from CPU.
Input Current	7.0 mA per point (typical) at rated voltage
Isolation: Field to Backplane (optical)	264 Vac continuous; 1500 Vac for one minute
Group to Group	264 Vac continuous; 1500 Vac for one minute
Thermal Derating	Refer to Figure 149.
Power Consumption	220 mA at 5 Vdc with all inputs on
Diagnostics	Terminal block presence reported to RX3i CPU
Input Characteristics On–state Voltage Off-state Voltage On–state Current Off-state Current	 70 to 132 Vac 0 to 20 Vac 5 mA minimum 2.5 mA maximum
On/Off Response Time	±0-1 AC cycles for filter times up to 840 ms ±1-2 AC cycles for filter times of 840 to 1600 ms ±2-3 AC cycles for filter times of 1600 to 1920 ms ±3-4 AC cycles for filter times of 1920 ms or more

6.6.2 Thermal Derating: MDL260

The number of inputs that can be on at the same time depends on the ambient temperature:

Figure 149: Thermal Derating Curve MDL260

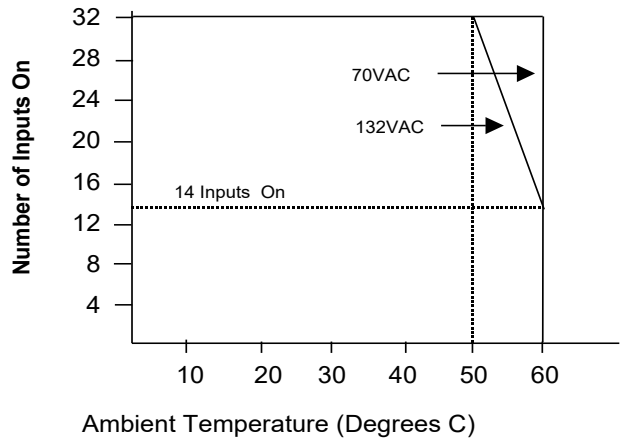

6.6.4 Input Filter Setup: MDL260

If an input filter time should be applied to all Module inputs, input filtering should be enabled in the software configuration of Module. For an MDL260 module installed in an RX3i main backplane, this is done by setting the Digital Filter Settings Length to 16 and specifying a memory location for the data. Configuring a Digital Filter Settings Length of 0 disables the input filter.

During system operation, the input filter time can easily be changed from the programmer by entering a filter setting value from 1 to 127 decimal (1_{hex} to $7F_{hex}$) into the assigned memory location. This filter setting value is equal to the new filter time divided by 20. For example, to change the filter time to 200 ms, enter the value 10_{dec} (200 / 20 = 10) into the memory location. The input filter time is automatically sent to Module each scan.

Some example filter times and their hexadecimal setting values are listed below.

Setting (hexadecimal)	Filter Time in ms	Setting (hexadecimal)	Filter Time in ms	Setting (hexadecimal)	Filter Time in ms
0A	200	21	660	5A	1800
0F	300	22	680	5F	1900
11	340	2A	840	71	2260
12	360	2F	940	72	2280
1A	520	51	1620	7A	2240
1F	620	52	1660	7F	2540

6.6.5 Module Status Data: MDL260

Discrete input module IC694MDL260 optionally provides sixteen bits of status data to the CPU in its assigned Module Status Reference location. By default, the configured length of this status area is 0. To access this data, the length must be changed from 0 to 16.

Module uses the lower eleven input bits to report its internal status information to the RX3i CPU, as follows:

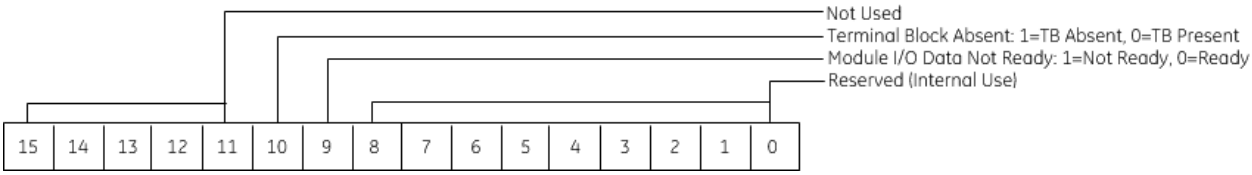

Note: the sense of bit 9 is inverted compared to most other modules. Here “1” indicates *not ready.*

6.6.7 Field Wiring: MDL260

Connections	Terminal
Input 1	1
Input 2	2
Input 3	3
Input 4	4
Input 5	5
Input 6	6
Input 7	7
Input 8	8
Common 1 - 8	9
Input 9	10
Input 10	11
Input 11	12
Input 12	13
Input 13	14
Input 14	15
Input 15	16
Input 16	17
Common 9 - 16	18

Figure 150: Field Wiring MDL260

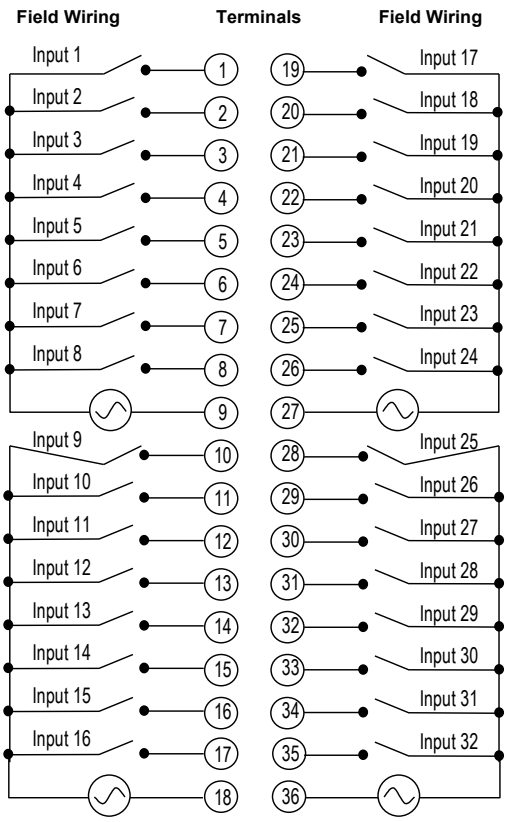

Terminal	Connections
19	Input 17
20	Input 18
21	Input 19
22	Input 20
23	Input 21
24	Input 22
25	Input 23
26	Input 24
27	Common 17 - 24
28	Input 25
29	Input 26
30	Input 27
31	Input 28
32	Input 29
33	Input 30
34	Input 31
35	Input 32
36	Common 25 - 32

6.7 Input Module, 125 Vdc Pos/Neg, 8-Point IC694MDL632

Figure 151: IC694MDL632

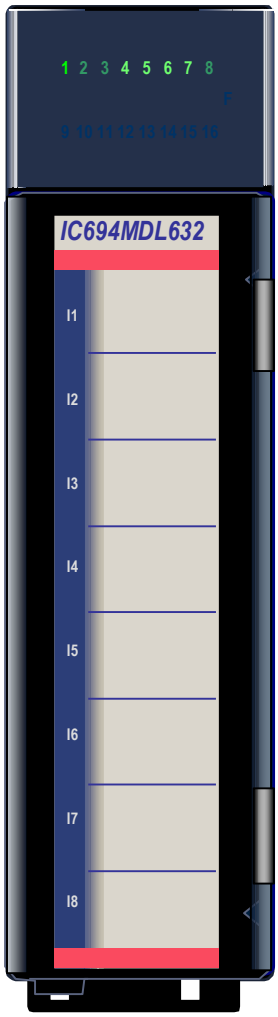

The ***125 Vdc Positive/Negative Logic Input*** module, IC694MDL632, provides eight input points in two isolated groups with four points in each group. Each group has a separate common (the two commons are not tied together inside Module). Each group can be wired for either positive or negative logic. Current passing into an input point results in a logic 1 in the input status table (%I). Input characteristics are compatible with a wide range of input devices, such as pushbuttons, limit switches, and electronic proximity switches.

Power to operate field devices must be supplied by the user.

Eight green LEDs indicate the ON/OFF status of points 1 through 8. The red bands on the label show that MDL632 is a high-voltage module.

This module can be installed in any I/O slot in an RX3i system.

Module supports insertion into and removal from an RX3i Universal Backplane which is under power. Refer to Section 2.6.4, *Hot Insertion and Removal*.

6.7.1 Specifications: MDL632

MDL632	Specifications
Rated Voltage	125 Vdc (Positive or Negative Logic)
Input Voltage Range	0 to +150 Vdc
Inputs per Module	8 (two groups of four inputs) The maximum number of inputs at the same time depends on ambient temperature (Figure 152).
Isolation: Field to Backplane (optical) and frame ground	250 Vac continuous; 1500 Vac for one minute
Group to Group	250 Vac continuous; 1500 Vac for one minute
Input Current	4.5 mA typical
Input Characteristics	
Input Characteristics On–state Voltage Off-state Voltage On–state Current Off-state Current On response Time Off response Time	 90 to 150 Vdc 0 to 30 Vdc 3.1 mA 1.1 mA maximum 7 ms typical 7 ms typical
Power Consumption	40 mA from the 5 V bus on the backplane 36 mA (typical) from user input supply (all inputs ON)

For product standards and general specifications, refer to Appendix A: Product Certifications and Installation Guidelines for Conformance.

6.7.2 Thermal Derating: MDL632

Figure 152: Thermal Derating Curve MDL632

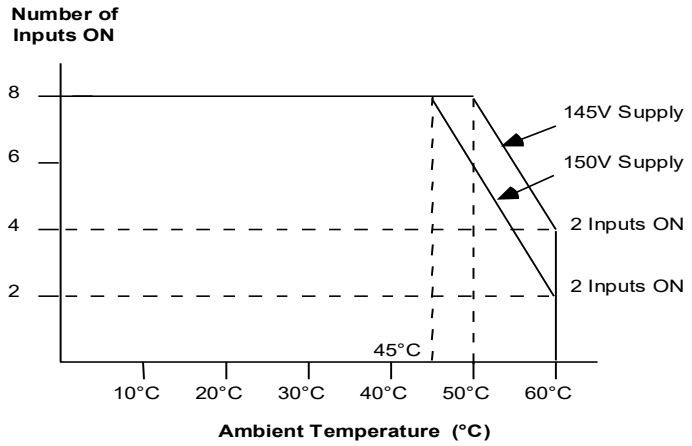

6.7.4 Field Wiring: MDL632

Terminal	Connections
1	No connection
2	Input 1
3	No connection
4	Input 2
5	No connection
6	Input 3
7	No connection
8	Input 4
9	No connection
10	Inputs 1-4 Common
11	No connection
12	Input 5
13	No connection
14	Input 6
15	No connection
16	Input 7
17	No connection
18	Input 8
19	No connection
20	Inputs 5-8 Common

Figure 153: Field Wiring MDL632

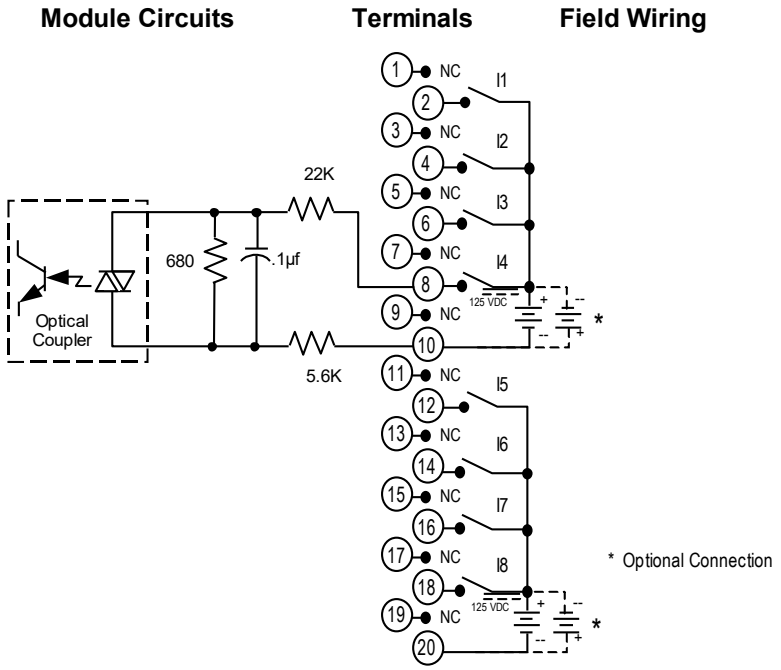

Negative logic connections are shown with dashed lines in Figure 153 above.

6.8 Input Module, 24 Vdc Pos/Neg, 8-Point IC694MDL634

Figure 154: IC694MDL634

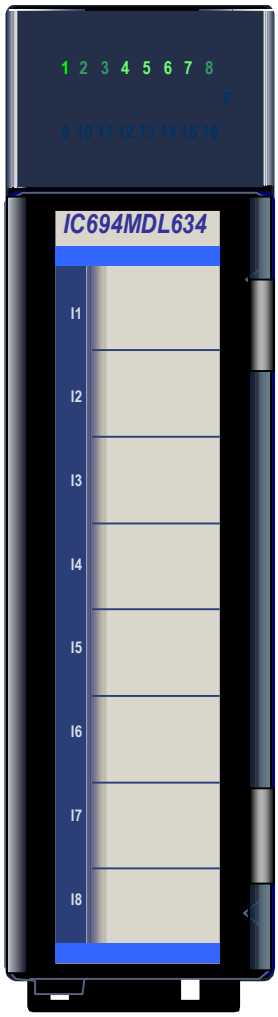

The ***24 Vdc Positive/Negative Logic Input*** module, IC694MDL634, provides eight input points in one group with a common power input terminal. This input module can be wired for either positive logic or negative logic. Input characteristics are compatible with a wide range of input devices, such as pushbuttons, limit switches, and electronic proximity switches. Current passing into an input point results in a logic 1 in the input status table (%I). Field devices can be powered from an external supply. Depending on their requirements, some input devices can be powered from the +24 V OUT and 0 V OUT terminals of Module.

Eight green LEDs indicate the ON/OFF status of points 1 through 8. The blue bands on the label show that MDL634 is a low-voltage module.

This module can be installed in any I/O slot in an RX3i system.

Module supports insertion into and removal from an RX3i Universal Backplane which is under power. Refer to Section 2.6.4, *Hot Insertion and Removal*.

Note: field-side terminal block must be removed from Module during such a procedure.

6.8.1 Specifications: MDL634

MDL634	Specifications
Rated Voltage	24 Vdc
Input Voltage Range	0 to +30 Vdc
Inputs per Module	8 (one group with a single common)
Isolation: Field to Backplane (optical) and frame ground	250 Vac continuous; 1500 Vac for one minute
Input Current	7 mA (typical) at rated voltage
Input Characteristics On–state Voltage Off-state Voltage On–state Current Off-state Current On response Time Off response Time	 11.5 to 30 Vdc 0 to +5 Vdc 3.2 mA minimum 1.1 mA maximum 7 ms typical 7 ms typical
Power Consumption: 5 Vdc	45 mA (all inputs on) from 5 Vdc bus on backplane
Power Consumption: 24 Vdc[20]	62 mA from the Isolated 24 Vdc backplane bus or user-supplied power

For product standards and general specifications, refer to Appendix A: Product Certifications and Installation Guidelines for Conformance.

[20] *If terminals 18 & 19 are employed, the following applies:*
If Module is located in an RX3i Universal Backplane, an external source of Isolated +24 Vdc is required. The external source must be connected through the TB1 connector located on the left side of the backplane.
If this module is located in an RX3i Expansion Backplane or Series 90-30 backplane, the backplane power supply provides the isolated +24 Vdc for Module.

6.8.2 Field Wiring: MDL634

Terminal	Connections
1	Inputs 1-8 Common
2	Input 1
3	Input 2
4	Input 3
5	Input 4
6	Input 5
7	Input 6
8	Input 7
9	Input 8
10	No connection
11	No connection
12	No connection
13	No connection
14	No connection
15	No connection
16	No connection
17	No connection
18	24 Vdc for input devices
19	0 V for input devices
20	No connection

Figure 155: Field Wiring MDL634

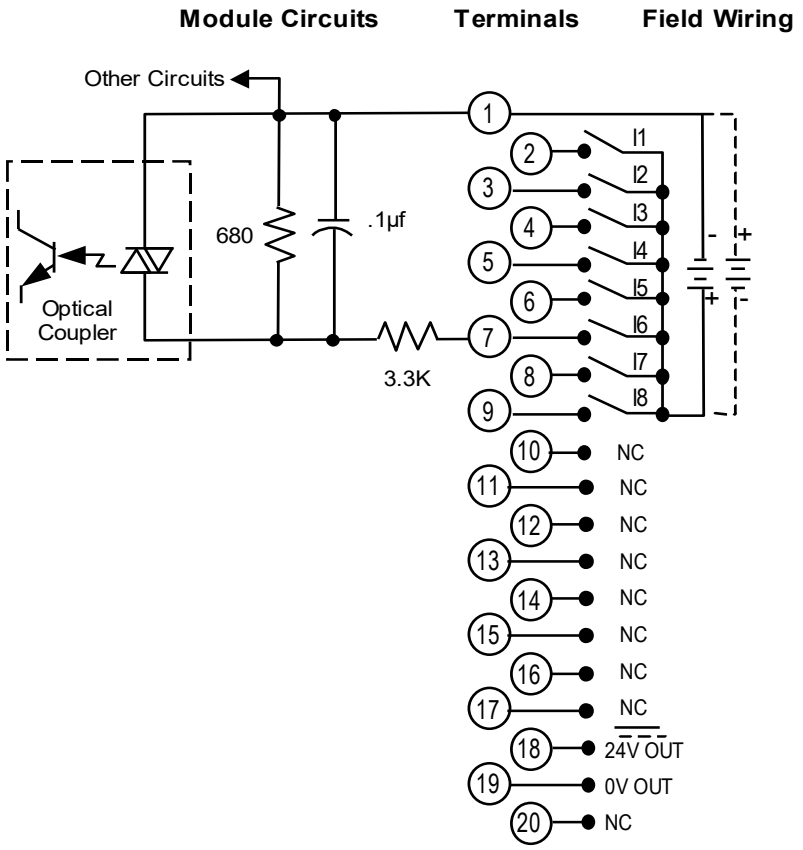

Negative logic connections are displayed with dashed lines in Figure 155 above.

Note: If the 24 V OUT pin is used to connect to input devices in the field, the isolation specification for this module changes to:

Field to Backplane (optical) and frame ground: 50 Vac continuous; 500 Vac for 1 minute

6.9 Input Module, 125 Vdc Pos/Neg, 16-Point IC694MDL635

Figure 156: IC694MDL635

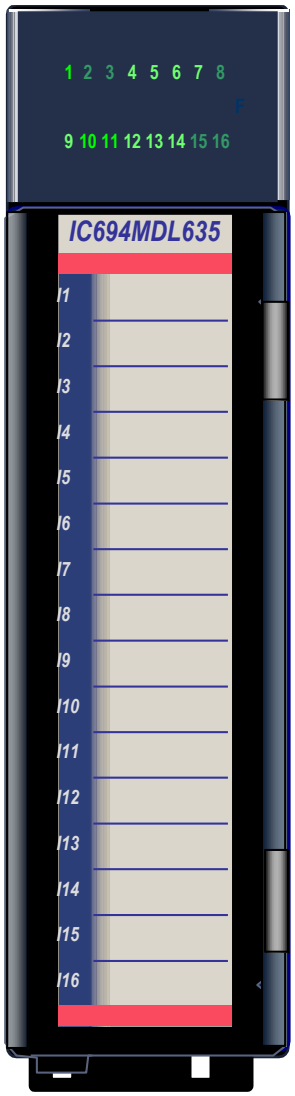

The ***125 Vdc Positive/Negative Logic Input*** module, IC694MDL635, provides sixteen input points in one group with a common power input terminal. This input module can be wired for either positive logic or negative logic. Input characteristics are compatible with a wide range of input devices, such as pushbuttons, limit switches, and electronic proximity switches. Current passing into an input point results in a logic 1 in the input status table (%I).

Power to operate field devices must be supplied by the user.

Sixteen green LEDs indicate the ON/OFF status of points 1 through 16. The red bands on the label show that MDL635 is a high-voltage module.

This module can be installed in any I/O slot in an RX3i system.

Module supports insertion into and removal from an RX3i Universal Backplane which is under power. Refer to Section 2.6.4, *Hot Insertion and Removal*.

6.9.1 Specifications: MDL635

MDL635	Specifications
Rated Voltage	125 Vdc
Input Voltage Range	0 to +150 Vdc
Inputs per Module	16 (one group with a single common). See Thermal Derating Figure 157.
Isolation: Field to Backplane (optical) and frame ground	250 Vac continuous; 1500 Vac for one minute
Input Current	1.97 mA (typical) at rated voltage
Input Characteristics On–state Voltage Off-stateVoltage On–state Current Off-state Current On response Time Off response Time	 90 to 150 Vdc 0 to +30 Vdc 1.41 mA minimum 0.46 mA maximum 8 ms typical 8 ms typical
Power Consumption: 5 Vdc	80 mA (all inputs on) from 5 Vdc bus on backplane
Power Consumption: 125 Vdc	31.5 mA from user-supplied power (all inputs ON at 125 Vdc)

Thermal Derating: MDL635

Figure 157: Thermal Derating MDL635

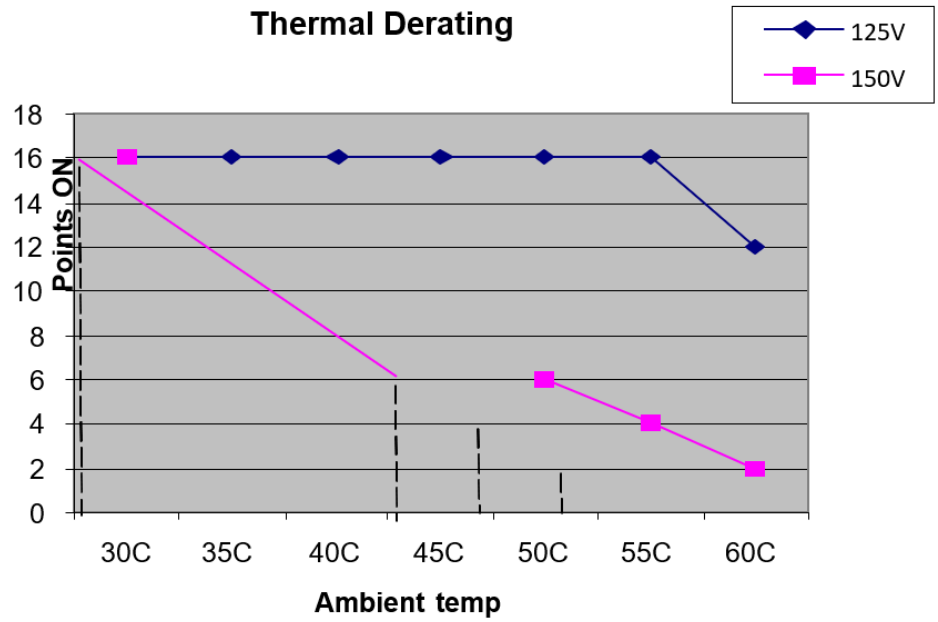

6.9.2 Field Wiring: MDL635

Terminal Block Wiring

Torque: 1.08 to 1.30 Nm (9.6 to 11.5 in-lb.)

Wiring: Copper conductors stranded or solid 90°C rated: One 14-22 AWG or two 16-22 AWG

Wiring Notes: No combination of solid or stranded wires is to be used in the same terminal.

No combination of different wire sizes is to be used in one terminal.

Terminal	Connection
1	Inputs 1-16 Common
2	Input 1
3	Input 2
4	Input 3
5	Input 4
6	Input 5
7	Input 6
8	Input 7
9	Input 8
10	Input 9
11	Input 10
12	Input 11
13	Input 12
14	Input 13
15	Input 14
16	Input 15
17	Input 16
18	Not used
19	Not used
20	Not used

Figure 158: Field Wiring MDL635

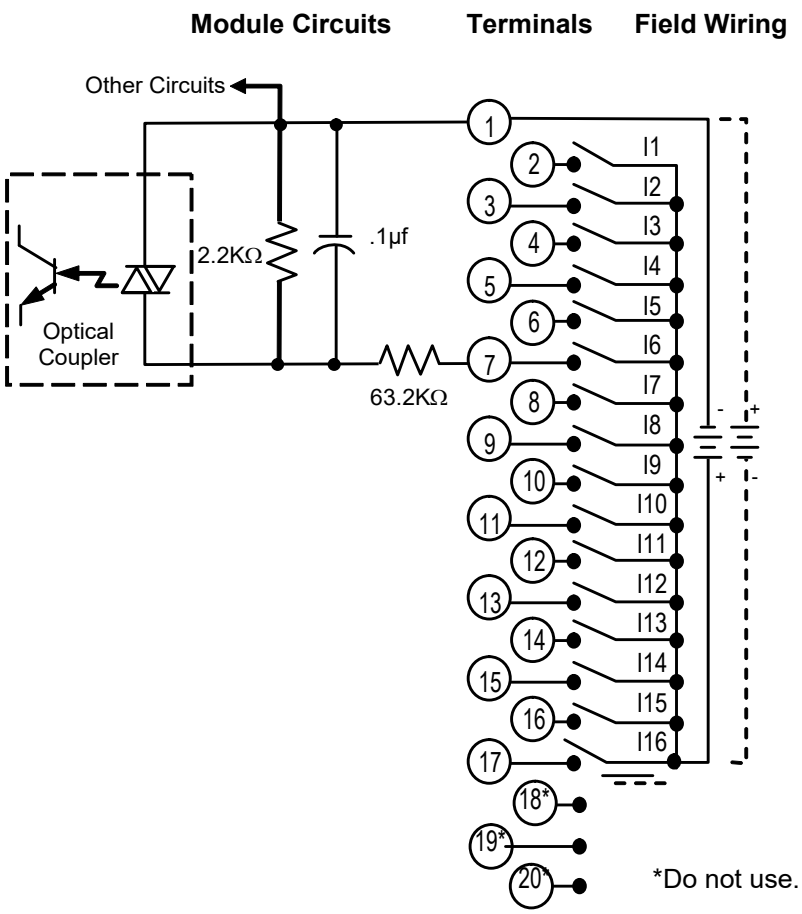

6.10 Input Module, 24 Vdc Pos/Neg, 16-Point IC694MDL645

Figure 159: IC694MDL645

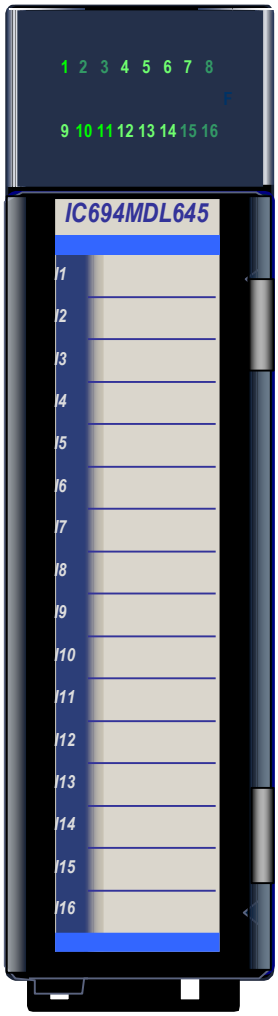

The ***24 Vdc Positive/Negative Logic Input*** module, IC694MDL645, provides sixteen input points in one group with a common power input terminal. This input module can be wired for either positive logic or negative logic. Input characteristics are compatible with a wide range of input devices, such as pushbuttons, limit switches, and electronic proximity switches. Current passing into an input point results in a logic 1 in the input status table (%I).

Field devices can be powered from an external supply. Depending on their requirements, some input devices can be powered from the +24 V OUT and 0 V OUT terminals of Module.

Sixteen green LEDs indicate the ON/OFF status of points 1 through 16. The blue bands on the label show that MDL645 is a low-voltage module.

This module can be installed in any I/O slot in an RX3i system.

Module supports insertion into and removal from an RX3i Universal Backplane which is under power. Refer to Section 2.6.4, *Hot Insertion and Removal*. Note that field-side terminal block must be removed from Module during such a procedure.

6.10.1 Specifications: MDL645

MDL645	Specifications
Rated Voltage	24 Vdc
Input Voltage Range	0 to +30 Vdc
Inputs per Module	16 (one group with a single common)
Isolation: Field to Backplane (optical) and frame ground	250 Vac continuous; 1500 Vac for one minute
Input Current	7 mA (typical) at rated voltage
Input Characteristics On–state Voltage Off-state Voltage On–state Current Off-state Current On response Time Off response Time	 11.5 to 30 Vdc 0 to +5 Vdc 3.2 mA minimum 1.1 mA maximum 7 ms typical 7 ms typical
Power Consumption: 5 Vdc	80 mA (all inputs on) from 5 Vdc bus on backplane
Power Consumption: 24 Vdc[21]	125 mA from the Isolated 24 Vdc backplane bus or from user-supplied power

For product standards and general specifications, refer to Appendix A: Product Certifications and Installation Guidelines for Conformance.

[21] *If terminals 18 & 19 are employed, the following applies:*
If Module is located in an RX3i Universal Backplane, an external source of Isolated +24 Vdc is required. The external source must be connected via the TB1 connector located on the left side of the backplane.
If this module is located in an RX3i Expansion Backplane or Series 90-30 backplane, the backplane power supply provides the isolated +24 Vdc for Module.

6.10.2 Field Wiring: MDL645

Terminal	Connection
1	Inputs 1-16 Common
2	Input 1
3	Input 2
4	Input 3
5	Input 4
6	Input 5
7	Input 6
8	Input 7
9	Input 8
10	Input 9
11	Input 10
12	Input 11
13	Input 12
14	Input 13
15	Input 14
16	Input 15
17	Input 16
18	24 Vdc for input devices
19	0 V for input devices
20	No connection

Figure 160: Field Wiring MDL645

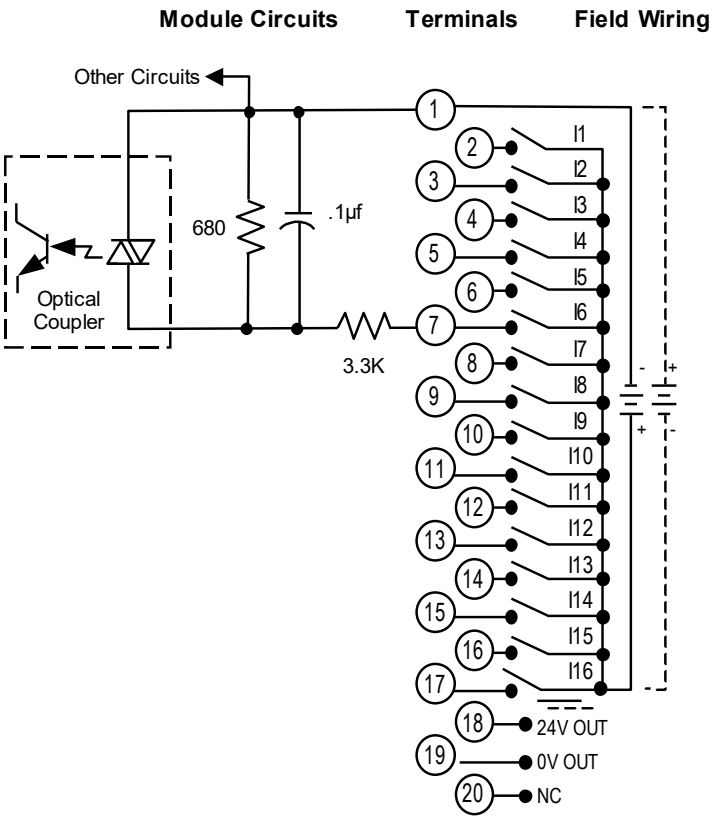

Note: If the 24 V OUT pin is used to connect to input devices in the field, the isolation specification for this module changes to:

Field to Backplane (optical) and frame ground: 50 Vac continuous; 500 Vac for 1 minute

6.11 Input Module: 24 Vdc 16-Point Pos/Neg Logic IC694MDL646

Figure 161: IC694MDL646

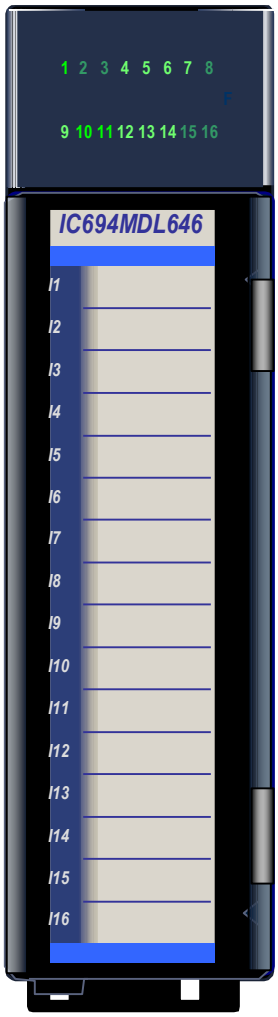

The ***24 Vdc Positive/Negative Logic 16-Point Input*** module, IC694MDL646, provides sixteen input points in one group with a common power input terminal. *The on and off response times for this module are typically 1 ms.* This input module can be wired for either positive logic or negative logic. Input characteristics are compatible with a wide range of input devices, such as pushbuttons, limit switches, and electronic proximity switches. Current passing into an input point results in a logic 1 in the input status table (%I).

Field devices can be powered from an external supply. Depending on their requirements, some input devices can be powered from the +24 V OUT and 0V OUT terminals of Module.

Sixteen green LEDs indicate the ON/OFF status of points 1 through 16. The blue bands on the label show that MDL646 is a low-voltage module.

This module can be installed in any I/O slot in an RX3i system.

Module supports insertion into and removal from an RX3i Universal Backplane which is under power. Refer to Section 2.6.4, *Hot Insertion and Removal*.

Note: field-side terminal block must be removed from Module during such a procedure.

6.11.1 Specifications: MDL646

MDL646	Specifications
Rated Voltage	24 Vdc
Input Voltage Range	0 to +30 Vdc
Inputs per Module	16 (one group with a single common)
Isolation: Field to Backplane (optical) and frame ground	250 Vac continuous; 1500 Vac for one minute
Input Current	7 mA (typical) at rated voltage
Input Characteristics On–state Voltage Off-state Voltage On–state Current Off-state Current On response Time Off response Time	 11.5 to 30 Vdc 0 to +5 Vdc 3.2 mA minimum 1.1 mA maximum 1 ms typical 1 ms typical
Power Consumption: 5 Vdc	80 mA (all inputs on) from 5 Vdc bus on backplane
Power Consumption: 24 Vdc[22]	125 mA from the Isolated 24 Vdc backplane bus or user-supplied power

For product standards and general specifications, refer to Appendix A: Product Certifications and Installation Guidelines for Conformance.

[22] *If terminals 18 & 19 are employed, the following applies:*
If Module is located in an RX3i Universal Backplane, an external source of Isolated +24 Vdc is required. The external source must be connected via the TB1 connector located on the left side of the backplane.
If this module is located in an RX3i Expansion Backplane or Series 90-30 backplane, the backplane power supply provides the isolated +24 Vdc for Module.

6.11.2 Field Wiring: MDL646

Terminal	Connection
1	Inputs 1-16 Common
2	Input 1
3	Input 2
4	Input 3
5	Input 4
6	Input 5
7	Input 6
8	Input 7
9	Input 8
10	Input 9
11	Input 10
12	Input 11
13	Input 12
14	Input 13
15	Input 14
16	Input 15
17	Input 16
18	24 Vdc for input devices
19	0 V for input devices
20	No connection

Figure 162: Field Wiring MDL646

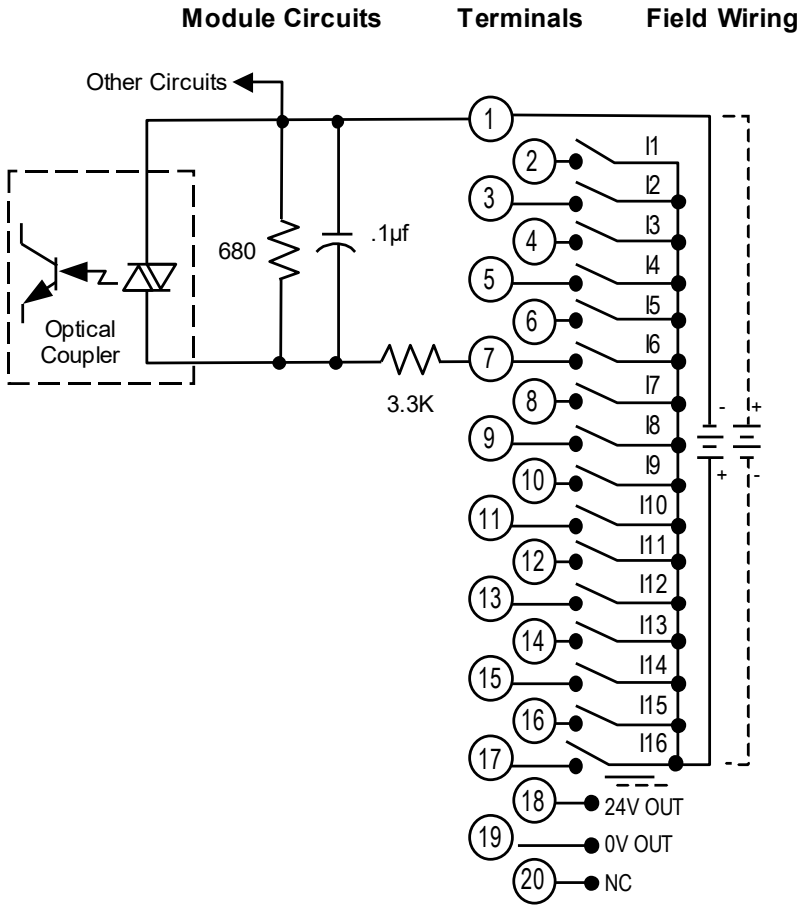

Note: If the 24 V OUT pin is used to connect to input devices in the field, the isolation specification for this module changes to:

Field to Backplane (optical) and frame ground: 50 Vac continuous; 500 Vac for 1 minute

6.12 Input Module: 48 Vdc 16-Point Isolated Pos/Neg Logic IC694MDL648

The ***48 Vdc Positive/Negative Logic 16-Point Input*** module, IC694MDL648, provides sixteen isolated input points in one group with a common power input terminal. The ON and OFF response times for this module are 1 ms maximum. This input module is designed to be used in either positive logic or negative logic applications. Input characteristics are compatible with a wide range of user-supplied input devices, such as pushbuttons, limit switches, and electronic proximity switches. Current passing into an input point results in a logic 1 in the Controller's input status table (%I).

Figure 163: IC694MDL648

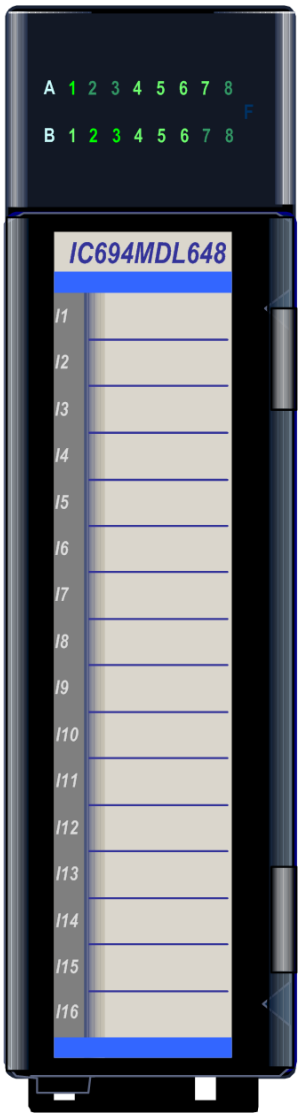

The blue bands on the label indicate that this is a low-voltage module.

This module can be installed in any I/O slot in an RX3i PLC System.

Module supports insertion into and removal from an RX3i Universal Backplane which is under power. Refer to Section 2.6.4, *Hot Insertion and Removal*. Note that field-side terminal block must be removed from Module during such a procedure.

Power to operate input devices is derived from an external 48 Vdc power source supplied by the user

LED Indicators

LED indicators to provide the ON/OFF status of each point. They may be viewed via the lens at the top of Module. This LED block has two horizontal rows with eight green LEDs in each row: the top row is labeled A1 through 8 (corresponding to points 1 through 8); the bottom row is labeled B1 through 8 (points 9 through 16).

6.12.1 Specifications: MDL648

MDL647	Specifications
Rated Voltage	48 Vdc
Input Voltage Range	0 to 60 Vdc
Inputs per Module	16 (one group with a single common). Note Thermal Derating (Figure 164)
Isolation	1500 V between the field-side and the logic side
Input Current	4.2 mA (typical) at rated voltage
Input Characteristics On–state Voltage Off-state Voltage On–state Current Off-state Current On response Time Off response Time	 34 to 60 Vdc 0 to 10 Vdc 3 mA minimum 1.1 mA maximum 1 ms maximum 1 ms maximum
Power Consumption: 5 Vdc	80 mA (all inputs on) from 5 Vdc bus on PLC backplane
Power Consumption: 48 Vdc	74 mA from the user-supplied 48 Vdc power supply

For product standards and general specifications, refer to Appendix A: Product Certifications and Installation Guidelines for Conformance.

6.12.2 Thermal Derating: MDL648

Figure 164: Thermal Derating MDL648

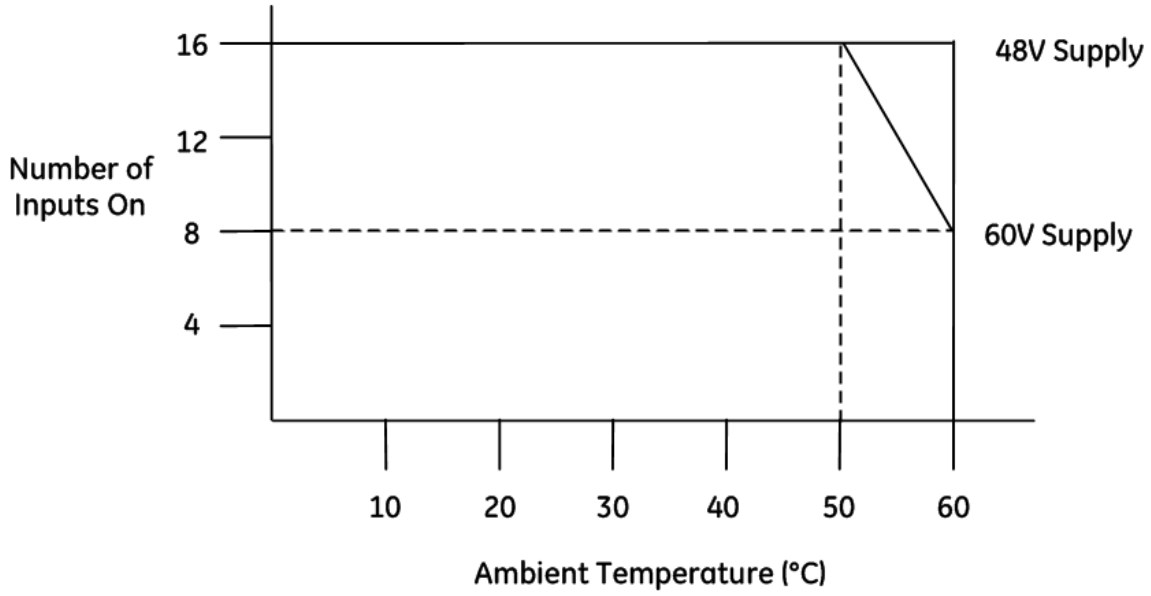

6.12.4 Field Wiring: MDL648

Figure 165 provides wiring information for connecting user-supplied input devices and power source to the 48 Vdc positive/negative logic input module.

Figure 165: Field Wiring MDL648

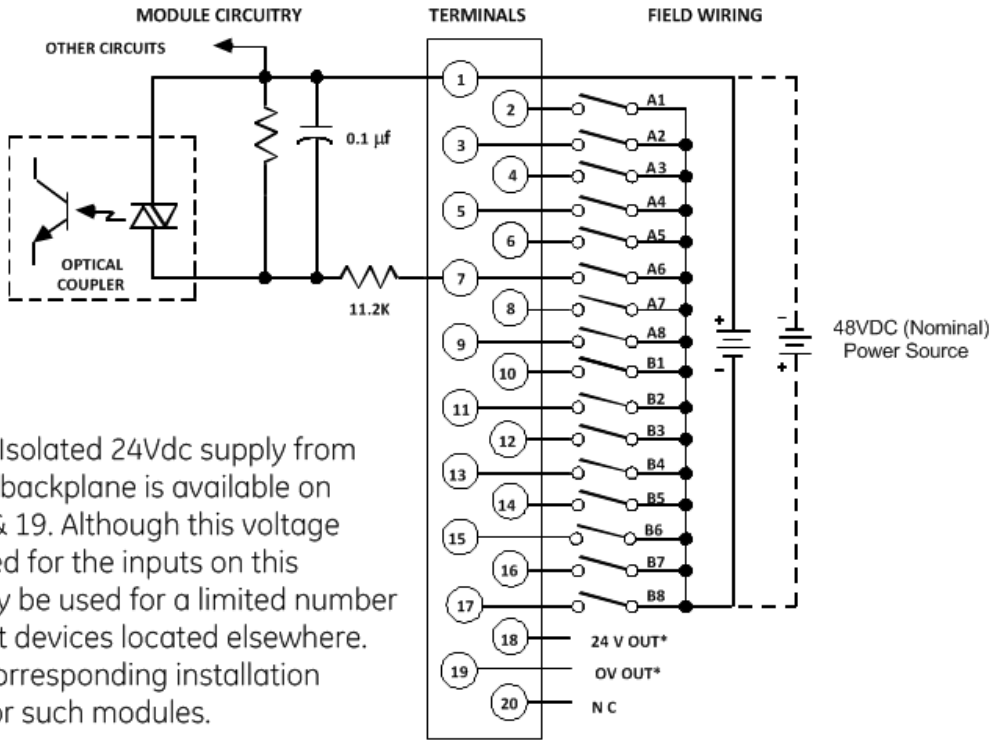

Note that the Isolated 24Vdc supply from the controller backplane is available on terminals 18 & 19. Although this voltage cannot be used for the inputs on this module, it may be used for a limited number of 24Vdc input devices located elsewhere. Refer to the corresponding installation instructions for such modules.

6.13 Input Modules, 5/12 Vdc (TTL) 32-Point Pos/Neg Logic IC694MDL654, IC694MDL655, and IC694MDL658

Figure 166: IC694MDL654

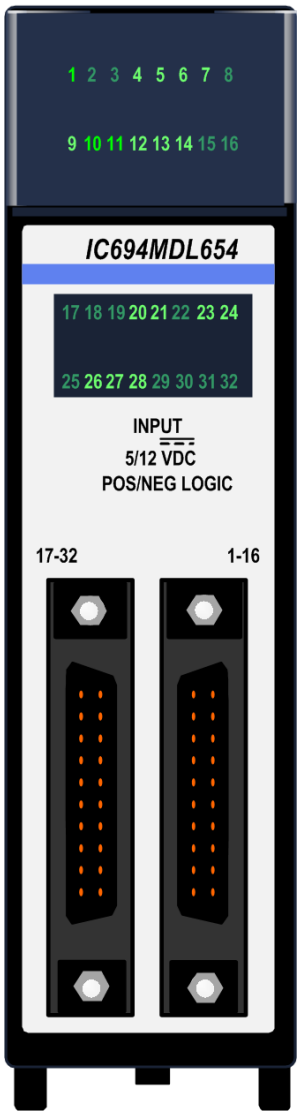

PACSystems RX3i ***32-Point Positive/Negative Logic*** input modules each provide thirty-two positive or negative logic input points in four isolated groups of eight. Each group is referenced to its own common connection.

5/12 Vdc (TTL) 32-Point Positive/Negative Logic Input module, IC694MDL654, provides thirty-two discrete TTL voltage threshold input points that operate at levels up to 15 V. A single, regulated +5 V supply (current limited to approximately 150 mA) is available through the I/O connectors on the front of Module. This supply is generated on Module and is isolated from the backplane. Its power input comes from the +5 V logic supply on the PLC backplane. By installing jumpers on the I/O connector, you can choose to power the inputs from this internal supply instead of powering them with an external user-provided supply.

24 Vdc 32-Point Positive/Negative Logic Input module, IC694MDL655, provides thirty-two discrete input points that operate at levels up to 30 V. Power to operate field devices can come from an external supply or the isolated +24 Vdc output of Module.

48 Vdc 32-Point Positive/Negative Logic Input module, IC694MDL658, provides thirty-two discrete input points that operate at levels up to 60 V. Power to operate field devices must be provided using an external supply.

The blue band on the front label indicates a low-voltage module.

These modules do not report a special fault or alarm diagnostics. Green LEDs indicate the ON/OFF status of each input point.

These modules can be installed in any I/O slot in the RX3i system.

These modules support insertion into and removal from an RX3i Universal Backplane which is under power. Refer to Section 2.6.4, *Hot Insertion and Removal*.

6.13.1 Specifications: MDL654, MDL655, MDL658

Specifications	IC694MDL654	IC694MDL655	IC694MDL658
Rated Voltage, Positive or Negative Logic	5 to12 Vdc	24 Vdc	48 Vdc
Input Voltage Range	0 to 15 Vdc	0 to 30 Vdc	0 to 60 Vdc
Input Current (typical ON current at rated voltage)	3.0 mA at 5 Vdc 8.5 mA at 12 Vdc	7.0 mA at 24 Vdc	1.7 mA at 48 Vdc
Input Characteristics On–state Voltage Off-state Voltage On–state Current Off-state Current	 4.2 to 15 Vdc 0 to 2.6 Vdc ≥2.5 mA (min) guaranteed on ≤1.2 mA (max) guaranteed off	 11.5 to 30 Vdc 0 to 5 Vdc ≥3.2 mA (min) guaranteed on ≤1.1 mA (max) guaranteed off	 34 to 60 Vdc 0 to 10 Vdc ≥1.0 mA (min) guaranteed on ≤0.4 mA (max) guaranteed off
On or Off Response Time[23]	1 ms maximum	2 ms maximum	2 ms maximum
Inputs per Module	32 (four groups of eight inputs each)		
	30 m (98.4 ft), maximum cable length for module IC694MDL654.		
	For modules MDL654 and MDL655, the maximum number of inputs per group that can be on at the same time depends on the ambient temperature as displayed in Figure 167. There is no thermal derating for module MDL658.		
Isolation: Field to Backplane (optical) and to frame ground Group to Group	 250 Vac continuous; 1500 Vac for one minute For modules IC694MDL654 and IC694MDL655, if the 5 V OUT/24 V OUT pin is used to connect to input devices in the field, the isolation is 50 Vac continuous; 500 Vac for one minute. 50 Vac continuous; 500 Vac for one minute		
Internal Power Consumption	440 mA (max) from +5 Vdc bus on backplane (if module isolated +5 Vdc supply used to power inputs and all 32 inputs ON) 96 mA (typical) from user input supply at 5 Vdc and 32 inputs ON); 272 mA (typical) from user input supply at 12 Vdc and 32 inputs ON)	195 mA (max) from +5 Vdc bus on backplane; (29 mA + 0.5mA/point ON + 4.7 mA/LED ON) 224 mA (typical) from isolated +24 Vdc supply[24]	195 mA (max) from +5 Vdc bus on backplane; (29 mA + 0.5 mA/point ON + 4.7 mA/LED ON)
Isolated +5 Vdc Supply	For MDL654: +5 Vdc ±5%		
Current limit	For MDL654: 150 mA (typical)		

For product standards and general specifications, refer to Appendix A: Product Certifications and Installation Guidelines for Conformance.

[23] *Within Module; does not include communications with CPU*

[24] *If Module is located in an RX3i Universal Backplane, an external source of Isolated +24 Vdc is required. The external source must be connected via the TB1 connector located on the left side of the backplane.*
If this module is located in an RX3i Expansion Backplane or Series 90-30 backplane, the backplane power supply provides the isolated +24 Vdc for Module.

6.13.2 Thermal Derating: MDL654 & MDL655

Figure 167: Thermal Derating MDL654 & MDL655

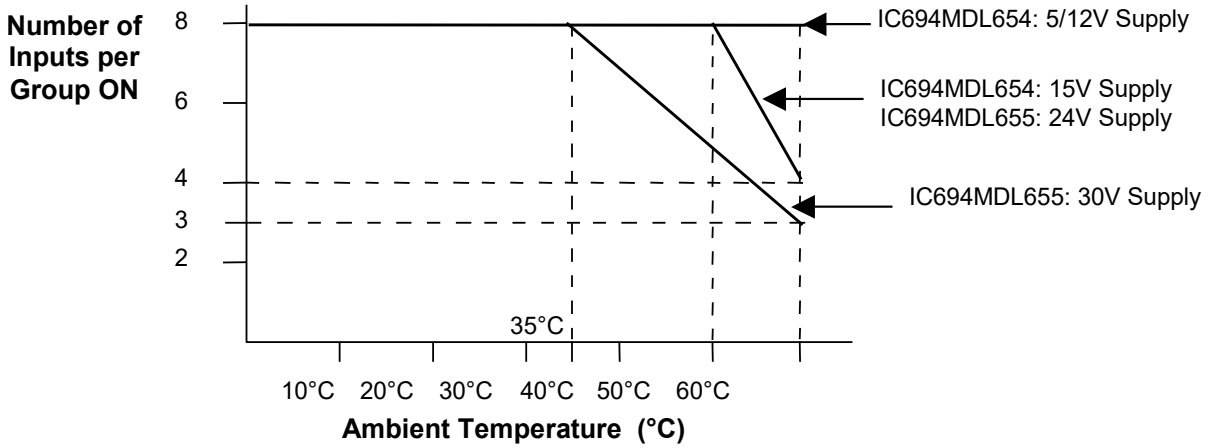

6.13.3 Field Wiring: MDL654, MDL655, MDL658

Connections are made to two male 24–pin connectors (Fujitsu FCN–365P024–AU) on the front of Module. Inputs are arranged in four groups of eight. Each group has its own common connection. Within each group, four points attach to the A half of the connector and four points attach to the B half of the connector.

Figure 168: Left-side and Right-side Connectors MDL654, MDL655, MDL658

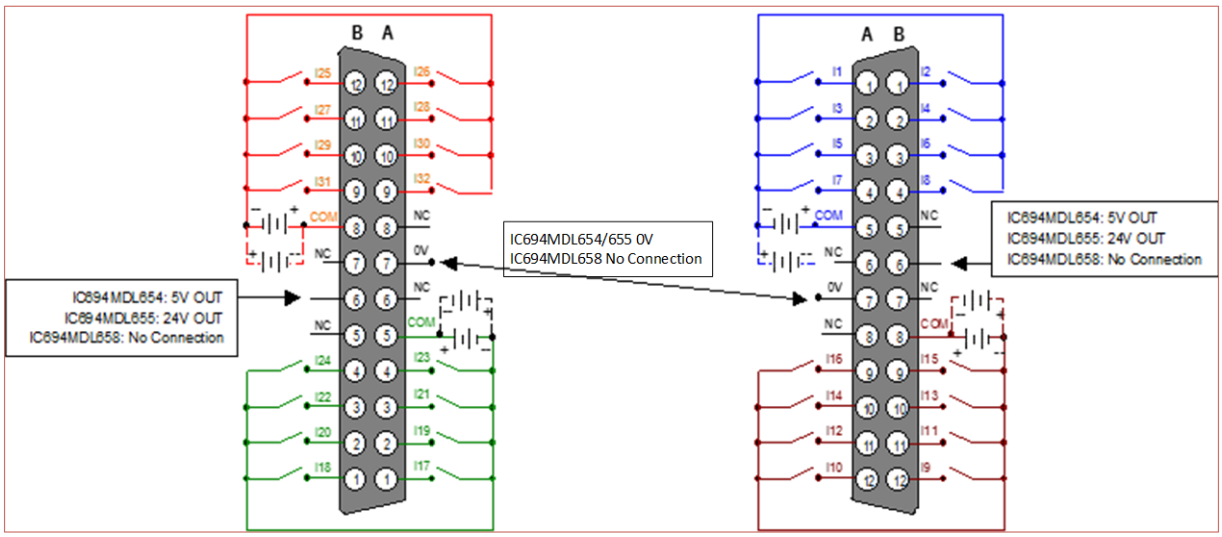

Figure 169: Attachment to Terminal Blocks for Field Wiring

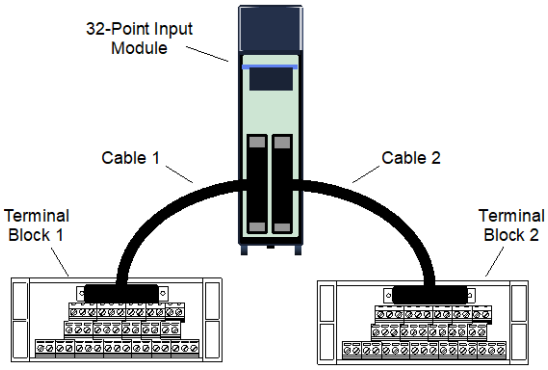

Wiring from each module connector to field devices is made through a cable. Prewired cables are available, or custom cables can be used. Input devices can be wired directly to the cables, or intermediate Terminal Blocks, IC693ACC337. Refer to Chapter 17 for information about prewired cables, custom cables, and Terminal Block IC693ACC337.

TTL Wiring: MDL654

Conventional TTL wiring practices should be followed when installing module IC694MDL654.

For noise immunity, I/O control lines connected to Module must be less than 30 meters in length (signal attenuation limits wiring length to less than this maximum).

To be compatible with TTL outputs, the negative logic configuration should be used as shown in Figure 170.

Figure 170: Wiring for Negative Logic MDL654

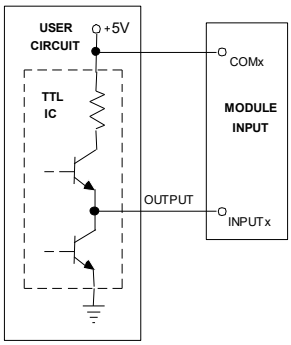

6.14 Input Module, 24 Vdc 32-Point Grouped IC694MDL660

Figure 171: IC694MDL660

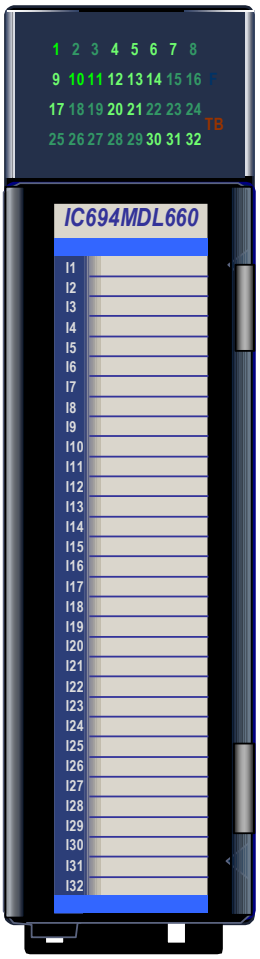

The ***24 Vdc Positive/Negative Logic Input*** module, IC694MDL660, provides thirty-two discrete input points. The inputs are positive or negative logic inputs and will operate at levels up to 30 V.

The inputs are arranged in four isolated groups of eight; each group has its own common. Isolation is provided between the four groups of inputs; however, each group of eight inputs is referenced to the same user common connection.

Module MDL660 provides seven selectable input filter times. Filter times can be set from the programmer using the assigned output data references of Module.

32 green LEDs indicate the ON/OFF status of points 1 through 32. The red/green TB LED is green when the removable terminal block of Module is locked in place. It is red when the terminal block is not locked. Module also sends an *Addition of Terminal Block* or *Loss of Terminal Block* message to the RX3i CPU to report the terminal block status.

The blue bands on the label show that MDL660 is a low-voltage module.

This module can be installed in any I/O slot in an RX3i system.

Module supports insertion into and removal from an RX3i Universal Backplane which is under power. Refer to Section 2.6.4, *Hot Insertion and Removal.*

Module supports firmware upgrades using the WinLoader software utility (if the host CPU has a serial port) or using a Web-based tool (if the host CPU has no serial port). Instructions are included with the firmware upgrade kit.[25]

This module can be used with a Box-style (IC694TBB032), Extended Box-style (IC694TBB132), Spring-style (IC694TBS032), or Extended Spring style (IC694TBS132) Terminal Block. Extended terminal blocks provide the extra shroud depth typically needed for field wiring to AC devices. Refer to Section 17: for more information about Terminal Blocks. The Terminal Block is ordered separately.

This module cannot be used with a Series 90-30 PLC CPU.

[25] *At time of publication, only PNC and ETM modules contained updated instructions. Refer to either of these in the event your update instructions do not include the web-based utility.*

6.14.1 Specifications: MDL660

MDL660	Specifications
Rated Voltage	24 Vdc
Input Voltage Range	0 to 30 Vdc
Inputs per Module	32 (four isolated groups of 8 inputs)
Isolation: Field to Backplane (optical) Group to Group	 250 Vac continuous; 1500 Vac for one minute 250 Vac continuous; 1500 Vac for one minute
Input Current	7.0 mA per point (typical) at rated voltage
Thermal De-Rating	Refer to Figure 172.
Input Characteristics: On–state Voltage Off-state Voltage On–state Current Off-state Current	 11.5 to 30 Vdc 0 to 5 Vdc 3.2 mA minimum 1.1 mA maximum
Input Filter Times	0.5 ms, 1.0 ms, 2.0 ms, 5 ms, 10 ms, 50 ms, and 100 ms, selectable per module
On response time	0.5 ms, 1.0 ms, 2.0 ms, 5.0 ms, 10.0 ms, 50.0 ms, and100.0 ms (as per filter setting)
Off response time	0.5 ms, 1.0 ms, 2.0ms, 5.0 ms, 10.0 ms, 50.0 ms, and 100.0 ms (as per filter setting)
Power Consumption	300 mA (all inputs on) from 5 Vdc bus on the backplane
Diagnostics	Terminal block presence/absence reported to RX3i CPU

For product standards and general specifications, refer to Appendix A: Product Certifications and Installation Guidelines for Conformance.

6.14.2 Thermal Derating: MDL660

The number of points that can be on at the same time depends on the ambient temperature and the voltage.

Figure 172: Thermal Derating Curve MDL660

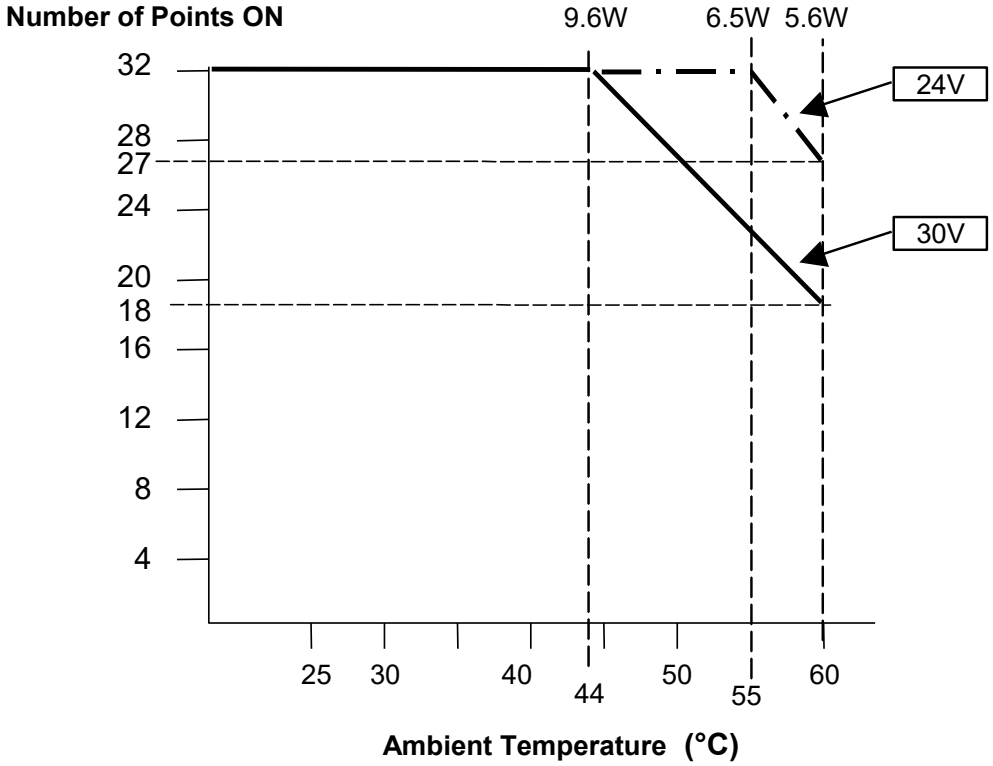

6.14.3 Field Wiring: MDL660

Connection	Terminal
Input 1	1
Input 2	2
Input 3	3
Input 4	4
Input 5	5
Input 6	6
Input 7	7
Input 8	8
Common 1 – 8	9
Input 9	10
Input 10	11
Input 11	12
Input 12	13
Input 13	14
Input 14	15
Input 15	16
Input 16	17
Common 9 – 16	18

Figure 173: Field Wiring MDL660

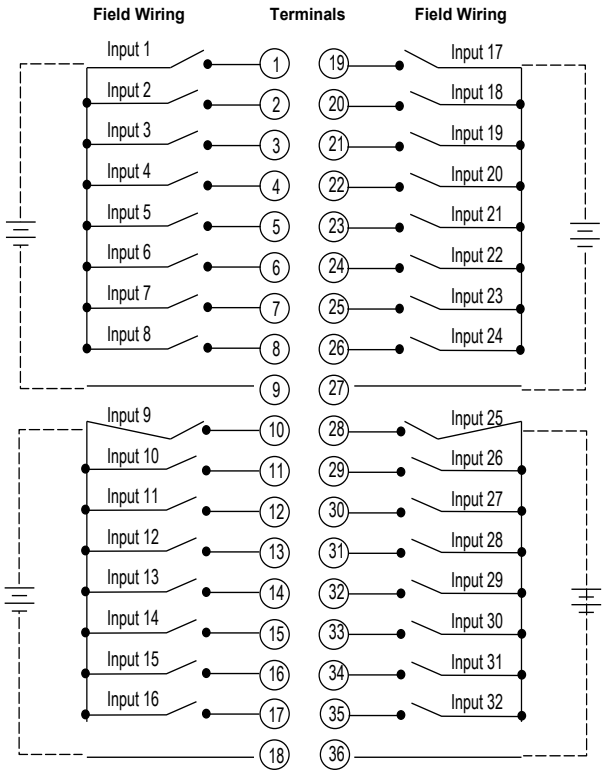

Terminal	Connection
19	Input 17
20	Input 18
21	Input 19
22	Input 20
23	Input 21
24	Input 22
25	Input 23
26	Input 24
27	Common 17 - 24
28	Input 25
29	Input 26
30	Input 27
31	Input 28
32	Input 29
33	Input 30
34	Input 31
35	Input 32
36	Common 25 - 32

6.14.4 Module Status Data: MDL660

Discrete Input Module IC694MDL660 can optionally be configured to provide 16 bits of status data. By default, the length assigned to Module status data is 0. To use the status data, the length must be changed to 16.

If a length of 16 has been assigned to Module status data, Module uses the lower eleven input bits to report its internal status information to the RX3i CPU, as follows:

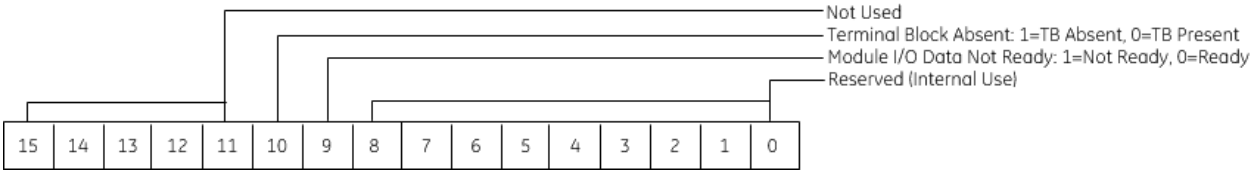

Note: the sense of bit 9 is inverted compared to most other modules. Here “1” indicates *not ready*.

6.14.5 Input Filter Setup: MDL660

If an input filter time should be applied to all Module inputs, input filtering should be enabled in the software configuration of Module. The Digital Filter Settings Length must be set to 16, and a memory location to be used for the filter value must be specified. Configuring a Digital Filter Settings Length of 0 disables the input filter.

During system operation, the input filter time can be changed from the application by modifying the memory location used for the filter value. Bits 0- 7 contain the filter time configuration data as displayed in the following table. Bits 8 - 15 are not used.

Binary Value in the Output Reference Bits	Filter Time
0000 0000	0.5 ms
0000 0001	1 ms
0000 0011	2 ms
0000 1001	5 ms
0001 0011	10 ms
0110 0011	50 ms
1100 0111	100 ms

6.15 Input Module, 24 Vdc 16-Point Grouped IC695MDL664

Figure 174: IC695MDL664

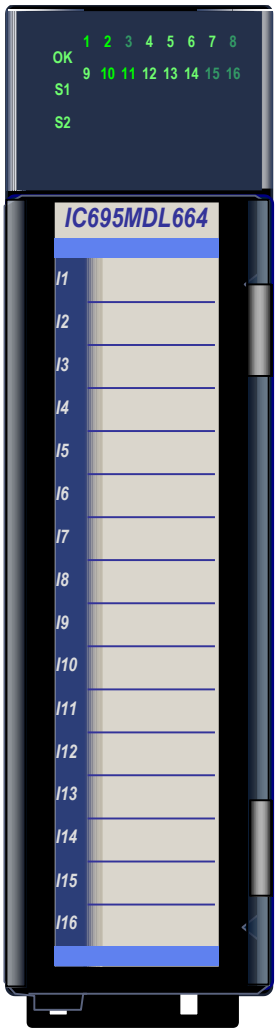

The ***Smart Digital Input*** module, IC695MDL664 provides sixteen positive logic input channels in two groups of eight. Module uses 24 Vdc field input power.

Each group of eight inputs is referenced to an isolated common connection. Input characteristics are compatible with a wide range of input devices, such as pushbuttons, limit switches, and electronic proximity switches. Current passing into an input point results in a logic 1 in the input status table (%I).

Power to operate field devices must be supplied by the user.

Sixteen dual LEDs indicate the ON/OFF/FAULT status of points 1 through 16. Two LEDs, S1 and S2 indicate whether field power is applied to each of the two input channel groups, and the status of the terminal block. Module also logs an *Addition of Terminal Block* or *Loss of Terminal Block* message to the I/O fault table to report the terminal block status.

The blue bands on the label show that MDL664 is a low-voltage module.

Features of the Smart Digital input module include:

- Selectable Input Filter Time from 0.5 ms to 100 ms.
- Open wire / Short to DC- (with external sense resistor)
- Short to DC + (with external sense resistor and external pull-up resistor)
- Input Pulse Test

This module can be installed in any I/O slot in an RX3i system.

Module supports insertion into and removal from an RX3i Universal Backplane which is under power. Refer to Section 2.6.4, *Hot Insertion and Removal*.

Module supports firmware upgrades using the WinLoader software utility (if the host CPU has a serial port) or using a Web-based tool (if the host CPU has no serial port). Instructions are included with the firmware upgrade kit.[25]

This module can be used with a Box-style (IC694TBB032), Extended Box-style (IC694TBB132), Spring-style (IC694TBS032), or Extended Spring style (IC694TBS132) Terminal Block. Extended terminal blocks provide the extra shroud depth typically needed for field wiring to AC devices. Refer to Section 17: for more information about Terminal Blocks. The Terminal Block is ordered separately.

6.15.1 LED Operation: MDL664

The Smart Input Module has 19 bi-color LEDs on the faceplate. The states of the input points are indicated by 16 green and amber channel status LEDs. Module OK LED indicates module status. The field status LEDs (S1 and S2) indicate whether the external +24 Vdc power supply is present and is above the minimum level, whether faults are present, and whether the terminal block is locked into place.

LED Name	Function	LED Indications
OK	Module status	**Off:** Module is not receiving power from the RX3i backplane or Module has failed self-test.
		Solid green: Module OK and configured.
		Blinking green: Module has not received configuration from the CPU. If the configuration is not successful, Module will continue to blink in this mode.
		Amber: Module hardware watchdog timeout
		Blinking amber: Module internal error. Record the blink pattern and contact technical support.
1–16	Channel status	**Off:** Input is off
		Green: Input is on
		Amber: Input fault
S1, S2	Terminal block and field power status	**Off:** Terminal present and field power not present
		Green: Terminal and field power present
		Red: Terminal did not present or field power overvoltage

Note: The OK, S1, and S2 LEDs blink green in unison when Module is in firmware update mode.

6.15.2 Specifications: MDL664

MDL664	Specifications
Inputs per Module	16 (two isolated groups of 8 inputs each)
Power Requirements	
Input Voltage (24V nominal), V_{IN}	18 – 32 Vdc
Ripple Voltage, maximum	10% Vpp
Backplane Power Consumption +3.3 Vdc +5.1 Vdc	 95 mA 225 mA (worst-case, i.e. with all channels on.)
Thermal De-Rating	None required with input voltages in the 18 Vdc – 24 Vdc range. For the 25 Vdc – 32 Vdc range, refer to Figure 175 below.
Input Resistance	1966 Ω
Input Capacitance	0.05 µf
Input Current (at 24 Vdc)	12.2 mA
Input Voltage ON (Logic 1)	0.5 × V_{IN} Vdc
Input Voltage OFF (Logic 0)	0.3 × V_{IN} Vdc
AC Characteristics	
Turn On Delay, typical	20.6 ms
Turn Off Delay, typical	20.6 ms
Digital Input Filter Time	0.5–100 ms, 20 ms default
Field to Backplane Continuous For 1 minute	 250 Vac 1500 Vac
Group to Group Continuous For 1 minute	 250 Vac 1500 Vac

For product standards and general specifications, refer to Appendix A: Product Certifications and Installation Guidelines for Conformance.

6.15.3 Thermal Derating: MDL664

With input voltage in the 18 to 24 Vdc range, no temperature de-rating is required, and all input channels can operate within the entire Surrounding Air temperature range. With input voltage greater than 24 Vdc, the number of active channels must be reduced as temperature increases, according to the following de-rating curve.

Figure 175: Thermal Derating Curve MDL664

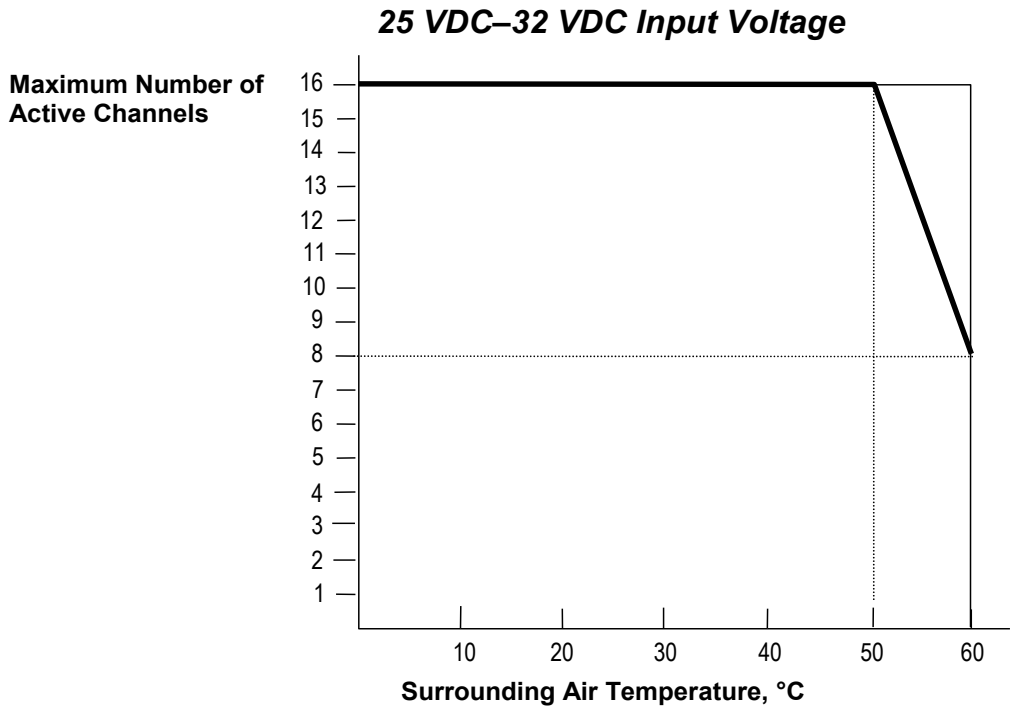

6.15.4 Field Wiring: MDL664

Connection	Terminal
Input 1	1
NC	2
Input 2	3
NC	4
Input 3	5
NC	6
Input 4	7
NC	8
Input 5	9
NC	10
Input 6	11
NC	12
Input 7	13
NC	14
Input 8	15
NC	16
DC +	17
DC -	18

Figure 176: Field Wiring MDL664

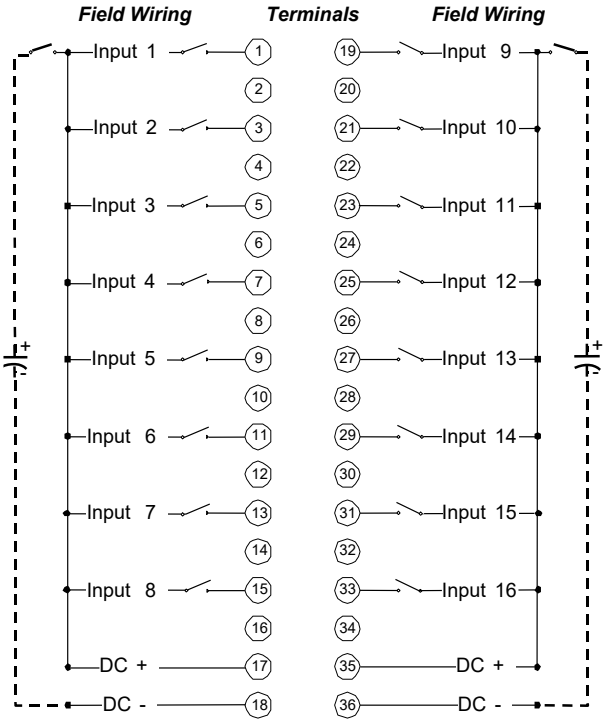

Terminal	Connection
19	Input 9
20	NC
21	Input 10
22	NC
23	Input 11
24	NC
25	Input 12
26	NC
27	Input 13
28	NC
29	Input 14
30	NC
31	Input 15
32	NC
33	Input 16
34	NC
35	DC+
36	DC-

6.15.5 Circuit Operation: MDL664

Normal Operation

The input circuit references the input to the common (DC -) on the field-side of Module. An ON condition for the input device is read as a logic 1, and an OFF condition for the input device is read as a logic 0.

Figure 177: Normal Thresholds MDL664

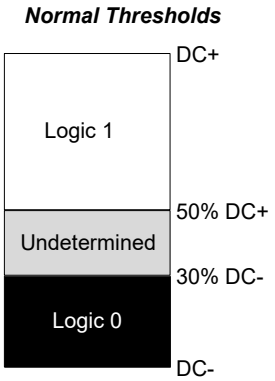

Tri-State Operation (Open Wire / Short to DC-Detection)

Figure 178: Tri-State Input Circuit Diagram

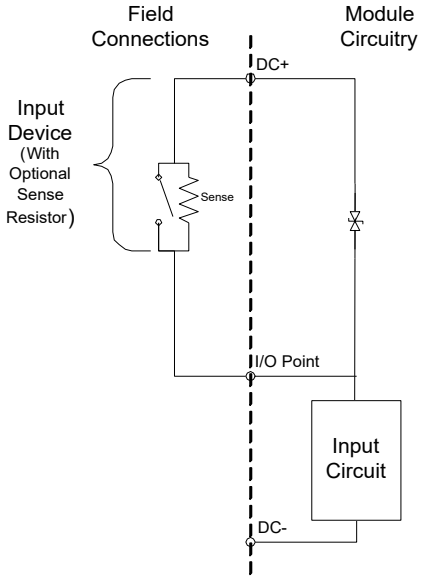

Figure 179: Tri-State Thresholds MDL664

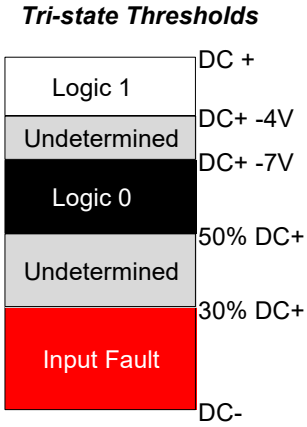

The Open Wire / Short to Ground diagnostic can be enabled on any circuit configured as a tri-state input. In addition to being configured as

a tri-state input, the circuit must have a non-inductive sense resistor placed as close as practical to the actual dry contacts (such as across the field device terminals).

Quad-State Operation (Open Wire / Short to DC- and Short to DC+ Detection)

Figure 180: Quad-State Input Circuit Diagram

Quadstate Input Diagram

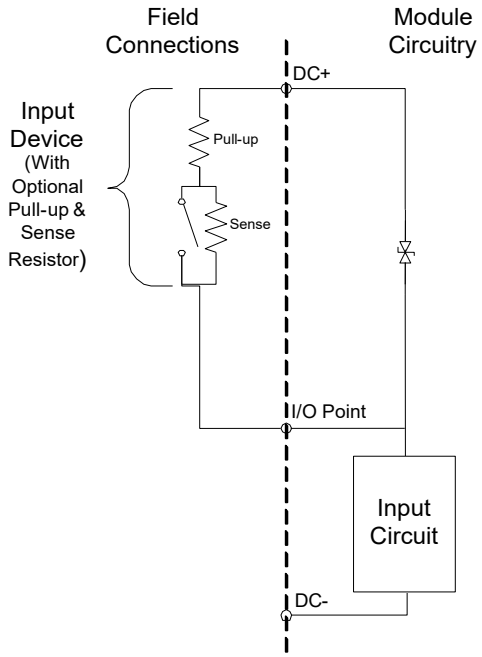

Figure 181: Quad-State Thresholds MDL664

Quad-state Thresholds

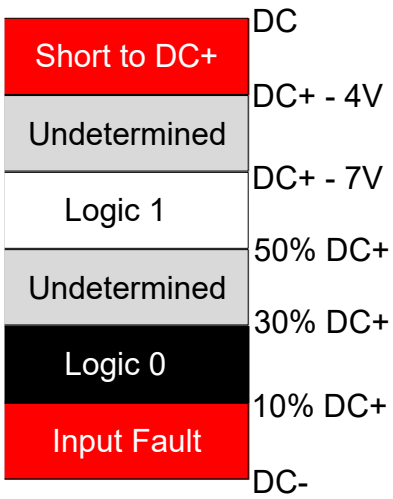

The Open Wire / Short to DC- diagnostic and the Short to DC+ diagnostic can be enabled on any circuit configured as a quad-state input. In addition to being configured as a quad-state input, the circuit must have a non-inductive sense resistor placed as close as practical to the actual dry contacts (such as across the field device terminals) and a pull-up resistor between the high side of the Input Device and DC+.

External Resistor Selection

For Tri-State and Quad-State, the external resistor values must be calculated to allow the logic levels to fall within the ranges for the selected Input mode when driven by the expected voltage of the device connected to the input point.

Example

Consider an ideal situation with an input configured for Quad-state, a DC+ reference of 24 V, and the input point connected to normally open contact that is driven by a voltage between 22 and 24 V. A sense resistor is placed across the contact and a pull-up resistor connects the contact to the voltage source.

Select the pull-up resistor first, using the logic 1 voltage levels. For Quad-state logic 1, the voltage at the input point must be between 12 Vdc (50% of DC+) and 17 Vdc (DC+ -7 V.) The closed contact shorts the sense resistor, so the voltage at the input point is determined by a divider between the internal resistance and the external pull-up resistor. To achieve the best margin across the range of input voltages, two resistances are determined to complete the divider from the maximum and minimum device voltage to the midpoint of the logic 1 range (14.5 Vdc.) From these two results, a standard resistor value that lies between the limits is chosen, such as 1100 Ω.

$$14.5 = 22 * \left(\frac{1966}{1966+\mathrm{Rp}}\right) \qquad \mathrm{Rp} = 1017$$

$$14.5 = 24 * \left(\frac{1966}{1966+\mathrm{Rp}}\right) \qquad \mathrm{Rp} = 1288$$

The sense resistor across the contact is solved next, using the logic 0 voltage levels. For Quad-state logic 0, the voltage at the input point must be between 2.4 Vdc (10% of DC+) and 7.2 Vdc (30% of DC+.) The voltage at the input point is determined by a voltage divider between the internal resistance and the two external resistors. To achieve the best margin across the range of input voltages, two resistances are determined to complete the divider from the maximum and minimum device voltage to the midpoint of the logic 0 range (4.8 Vdc.) From these two results, a standard resistor value that lies between the limits is chosen, such as 6200 Ω.

$$4.8 = 22 * \left(\frac{1966}{1966+1100+\mathrm{Rs}}\right) \qquad \mathrm{Rs} = 5945$$

$$4.8 = 24 * \left(\frac{1966}{1966+1100+\mathrm{Rs}}\right) \qquad \mathrm{Rs} = 6764$$

6.15.6 Input and Output Data Formats: MDL664

Channel Value Data

Module reports its input channel data in one bit per input, beginning at the configured *Channel Value Reference Address.*

Channel Diagnostic and Status Data

Module can be configured to report channel diagnostic and status data to the CPU. The CPU stores this data at the configured *Diagnostic Reference Address* of Module. The use of this feature is optional.

The data for each channel occupies two words whether or not the channel is used.

Note: At least two sweeps must occur to clear the diagnostic bits: one scan to send the %Q data to Module and one scan to return the %I data to the CPU. Because module processing is asynchronous to the controller sweep, more than two sweeps may be needed to clear the bits, depending on the sweep rate and the point at which the data is made available to Module.

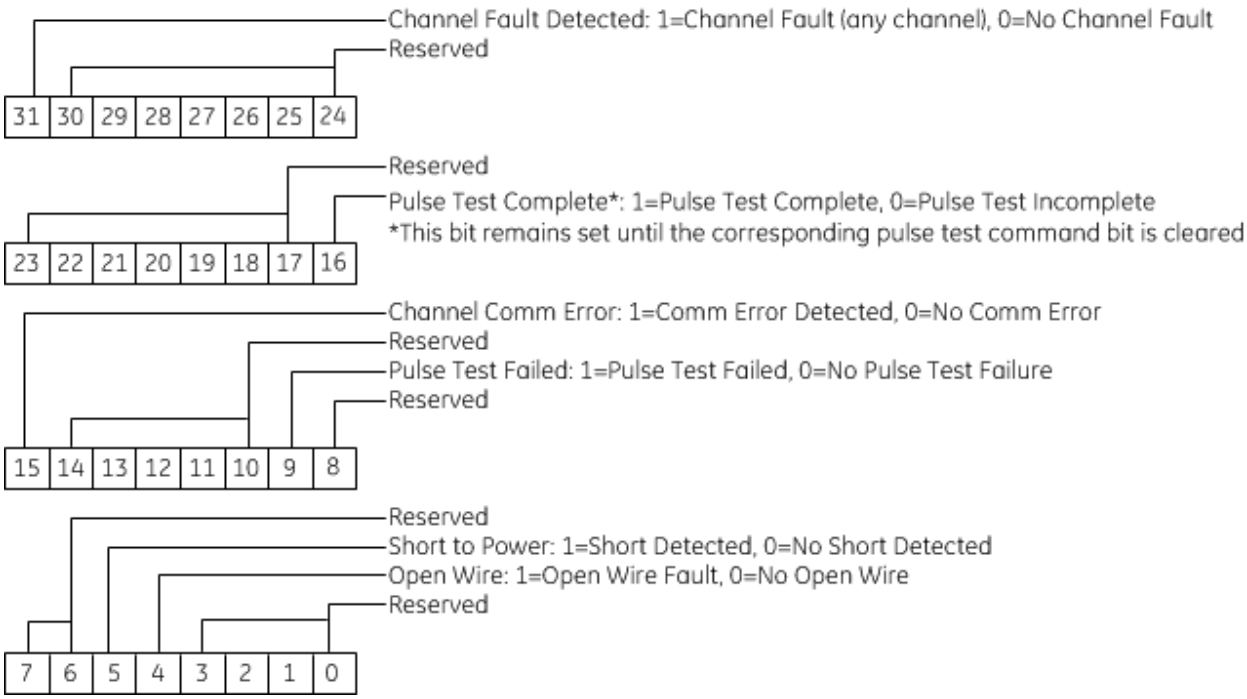

Module Status Data: MDL664

Module can be configured to return two words of module status data to the CPU. The CPU stores this data in the 32-bit *Module Status Data* reference area configured for Module.

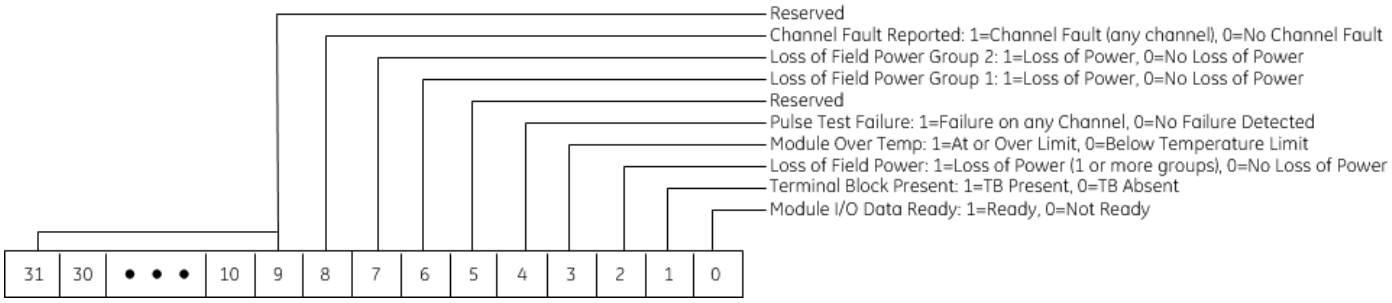

Pulse Test Command Output Data

Module uses these bits (one bit per input), beginning at the configured *Pulse Command Output Reference Address* to command an on-demand pulse test. To command an on-demand pulse test, the Pulse Test Enable parameter for the channel must be set to *Enabled – Manual*.

6.15.7 Diagnostics: MDL664

Module always performs a set of standard diagnostic checks. Individual circuits can be configured not to log a fault to the CPU if a fault occurs. Module returns current diagnostics for all circuits to %I bits.

Input Pulse Test

The Input Pulse Test is an optional diagnostic feature that exercises the input points to confirm they can detect and respond to changes in the actual input state. Pulse testing verifies the ability of the input circuits to detect a change in state. Pulse Testing should be enabled if Module has loads that hold state for long periods of time. The application must be capable of withstanding the loss of the input feedback for up to 16 ms.

When the pulse test occurs, the input point power is removed, and then the input is connected internally to DC+. This verifies the ability of the input to detect a change in state. Each of the input points is tested individually to ensure there are no shorts between inputs. If a change in state is not detected, a fault is logged with the CPU. Valid field power must be present for the pulse test to run successfully.

On Demand Pulse Test

To use this feature, the Pulse Test Enable parameter for the channel must be set to *Enabled-Manual.* To command, a pulse test, set the Pulse Test Command bit for the channel(s) to be pulse tested.

Module will perform one or more pulse tests for each channel selected. Since this will take many sweeps, you should keep the Pulse Test Command bit set until the Pulse Test Complete bit is set for that channel in the Channel Diagnostic and Status Data.

Module will keep the Pulse Test Complete bit set as long as the Pulse Test Command bit is set. One output scan with the Pulse Test Command bit cleared clears the Pulse Test Complete status bit and the Pulse Test Failure diagnostic bit.

Automatic Pulse Test

To use this feature, the Pulse Test Enable parameter for the channel must be set to *Enabled-Auto.*

The Input Pulse Test occurs at a frequency selected in the Hardware Configuration, with no intervention from the CPU. The pulse test execution is based on the Time of Day clock set in the CPU, and the frequency is relative to 12:00 AM. For example, a frequency of 12 hours will result in a pulse test run at 12:00 AM and 12:00 PM.

If the pulse test fails, the Pulse Test Failed bit is set.

6.15.8 Configuration: MDL664

Module Settings: MDL664

Parameter	Function
Channel Value Reference Address Channel Value Reference Length	Specifies the memory location where Module reports 16 bits of channel values.
Diagnostic Reference Address	Specifies the starting address for reporting channel diagnostics data.
Diagnostic Reference Length	Provides thirty-two bits of diagnostic data per channel. Setting this value to 0 disables channel diagnostics reporting.
Module Status Reference Address	Specifies the starting address for reporting module status data.
Module Status Reference Length	Provides thirty-two bits of module status data. Setting this value to 0 disables channel diagnostics reporting.
Pulse Test Command Output Reference Address/ Pulse Test Command Output Reference Length	Specifies the memory location for manual pulse test command data.
Channel Faults w/o Terminal Block	Enables or disables the generation of channel faults and alarms after a Terminal Block has been removed.
Inputs Default w/o Terminal Block	Enables or disables defaulting inputs when the terminal block is removed.
Loss of Terminal Block Detection	Enables or disables logging of a fault to indicate a Terminal Block has been removed.
Loss of Field Power Group 1 Detection/ Loss of Field Power Group 2 Detection	Enables or disables loss of field power detection for the specified group.
Inputs Default	Specifies whether inputs will go to Force Off or Hold the Last State if Module loses communication with the CPU.
I/O Scan Set	Assigns Module I/O status data to a scan set defined in the CPU configuration. Determines how often the RX3i polls the data.

Channel Settings: MDL664

Parameter	Function	Input Type
Input Type	Selects the input operation, along with enabling the corresponding fault logging. Choices are: Dual state, Tri-state, or Quad-state.	
Digital Filter	Enables or disables the digital filter for the input.	All
Digital Filter Frequency	Selects the digital filter frequency in 0.5ms increments. For details, refer to *Input Filter Time: MDL664*.	All
Pulse Test Enable	Enables or disables pulse testing of input. Allows you to select Manual or Automatic pulse testing. For details about this feature, refer to *Diagnostics: MDL664*.	All
Pulse Test Frequency	If Pulse Test Enable is set to Auto, allows you to select the frequency of pulse testing.	All
Diagnostic Reporting Enable	Enables or disables channel diagnostics. If enabled, channel diagnostic data is written to the Channel Diagnostic and Status Data.	All
Open Wire Reporting Enable	If enabled, an open wire condition is reported in the Channel Diagnostic and Status Data.	Tri-State Quad-State
Short to Power Reporting Enable	If enabled, a short to power is reported in the Channel Diagnostic and Status Data.	Quad-State
Pulse Test Failed Enable	If enabled, the results of manual or automatic pulse testing are reported in the Channel Diagnostic and Status Data.	All
Fault Reporting Enable	If enabled, channel faults are reported to the I/O fault table.	All
Open Wire Reporting Enable	If enabled and the corresponding diagnostic reporting is enabled, an open wire condition is reported in the I/O fault table.	Tri-State Quad-State
Short to Power Reporting Enable	If enabled and the corresponding diagnostic reporting is enabled, a short to power is reported in the I/O fault table.	Quad-State
Pulse Test Failed Enable	If enabled and the corresponding diagnostic reporting is enabled, a failed pulse test is reported in the I/O fault table.	All

Input Filter Time: MDL664

An input filter time of 0.5 to 100 ms can be selected for Module, in 0.5ms increments. The default filter time is 20 ms. The input filter can be disabled.

Figure 182: Effect of Input Filter Time

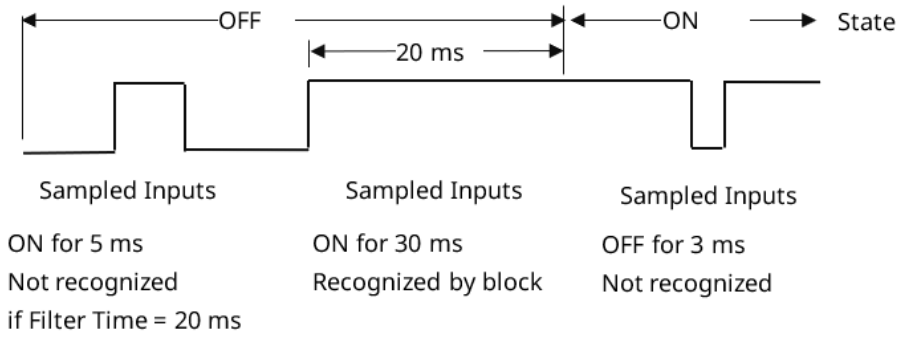

The filter is a digital low-pass filter. Module continuously samples an input for the length of the filter time period. The input must remain at a constant state for the length of the Filter Time for Module to recognize the state.

An input filter helps reject spurious noise spikes and multiple inputs generated by the bounce of mechanical devices. In controlled, noise-free environments, signals generated by clean, solid-state electronics may be unnecessarily slowed by a filter, delaying system response. In such an environment, no additional filter time is needed. In noisy environments, use a longer filter time to prevent noise from possibly causing erratic or unsafe system operations.

6.16 Input Simulator, 8-/16-Point IC694ACC300

Figure 183: IC694ACC300

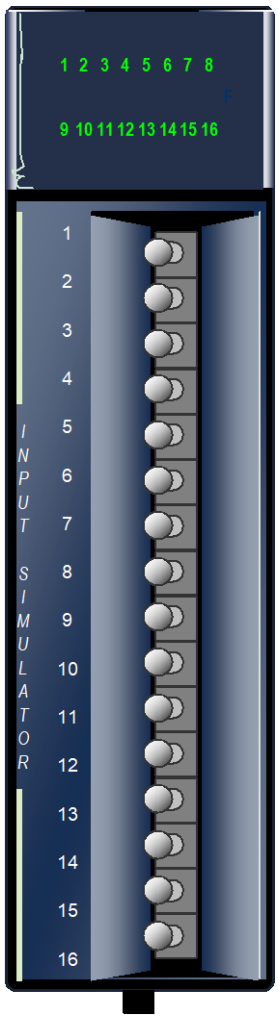

The ***Input Simulator*** module, IC694ACC300, can be used to simulate the operation of 8-point or 16-point discrete input modules. The Input Simulator has no field connections.

The Input Simulator can be substituted for actual inputs until the program or system is debugged. It can also remain permanently installed to provide either 8 or 16 conditional input contacts for manual control of output devices.

Before the Input Simulator module is installed, a switch in the back of Module (Figure 184) can be used to set it up for either 8-point or 16 point-operation. When this switch is set for 8 points, only the first 8 toggle switches on the front of the Input Simulator can be used.

Figure 184: Mode Switch

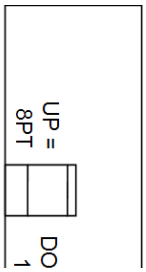

Toggle switches on the front of the Input Simulator simulate the operation of discrete input devices. A switch in the ON position results in a logic 1 in the input table (%I).

Individual green LEDs indicate the ON or OFF position of each toggle switch.

This module can be installed in any I/O slot in an RX3i system.

Module supports insertion into and removal from an RX3i Universal Backplane which is under power. Refer to Section 2.6.4, *Hot Insertion and Removal*.

6.16.1 Specifications: ACC300

ACC300	Specifications
Inputs per Module	8 or 16 (switch selectable)
Off Response Time	20 ms maximum
On Response Time	30 ms maximum
Internal Power Consumption	120 mA (all inputs on) from 5 Vdc bus on the backplane

For product standards and general specifications, refer to Appendix A: Product Certifications and Installation Guidelines for Conformance.

Section 7: Discrete Output Modules

This chapter describes discrete output modules for PACSystems RX3i controllers.

Discrete Output Module Description	Catalog Number	Section
Output 120 Vac 0.5 A 12-Pt	IC694MDL310	0
Output 120/240 Vac 2 A 8-Pt	IC694MDL330	0
Output 120 Vac 0.5 A 16-Pt	IC694MDL340	7.3
Output 120/240 Vac 16-Pt Isolated	IC694MDL350	7.4
Output 120/240 Vac 2 A 5-Pt Isolated	IC694MDL390	7.5
Output 12/24 Vdc 2 A 8-Pt Positive Logic	IC694MDL730	7.6
Output 12/24 Vdc 0.5 A 8-Pt Positive Logic	IC694MDL732	7.7
Output 125 Vdc 1 A 6-Point Isolated Positive/Negative Logic	IC694MDL734	7.8
Output 12/24 Vdc 0.5 A 16-Pt Positive Logic	IC694MDL740	7.9
Output 12/24 Vdc 0.5 A 16-Pt Negative Logic	IC694MDL741	7.10
Output 12/24 Vdc 1 A 16-Pt Positive Logic with ESCP per Group	IC694MDL742	7.11
Output 5/24 Vdc (TTL) 0.5 A 32-Pt Negative Logic	IC694MDL752	7.12
Output 12/24 Vdc 0.5 A 32-Pt Positive Logic	IC694MDL753	7.13
Output 12/24 Vdc 0.75 A 32-Pt Positive Logic with ESCP per Group	IC694MDL754	7.14
Output 12/24 Vdc 0.5 A 32-Pt Positive Logic with ESCP per Group	IC694MDL758	7.15
Output 24/125 Vdc 2 A 16-Pt Grouped Positive Logic with ESCP & Diagnostics	IC695MDL765	7.16
Output Relay 4 A 16-Pt	IC694MDL916	7.17
Output Isolated Relay N.O. 4 A 8-Pt	IC694MDL930	7.18
Output Isolated Relay N.C. and Form C 3 A 8-Pt	IC694MDL931	7.19
Output Relay N.O. 2 A 16-Pt	IC694MDL940	7.20

7.1 Output Module, 120 Vac, 0.5 A, 12-Point: IC694MDL310

Figure 185: IC694MDL310

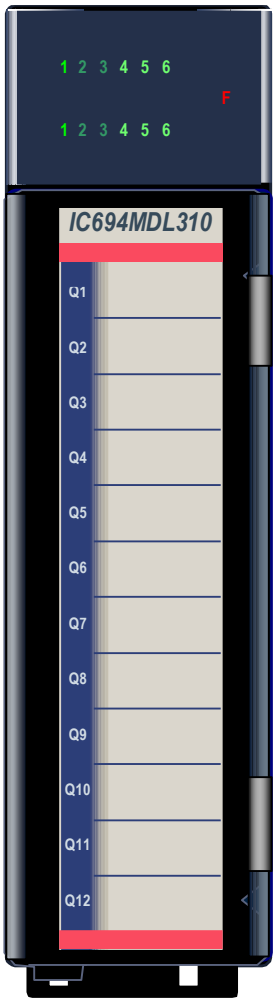

The ***120 Vac 0.5 A Output*** module, IC694MDL310, provides 12 output points in two isolated groups of six points. Each group has a separate common. The two commons are not tied together inside Module. The groups can be used on different phases of the AC supply or powered from the same supply. Each group is protected with a 3 Amp fuse. An RC snubber for each output protects against transient electrical noise on the power line. This module provides a high degree of inrush current (10x the rated current) so the outputs can control a wide range of inductive and incandescent loads.

AC power to operate loads connected to outputs must be user-supplied. This module requires an AC power source; *it cannot be used with a DC power source*.

Individual numbered LEDs show the ON/OFF status of each output point. The red LED (F) turns ON if an output fuse blows. The red bands on the label show that MDL310 is a high-voltage module.

This module can be installed in any I/O slot in an RX3i system.

Module supports insertion into and removal from an RX3i Universal Backplane which is under power. Refer to Section 2.6.4, *Hot Insertion and Removal*.

7.1.1 Specifications: MDL310

MDL310	Specifications
Rated Voltage	120 Vac
Output Voltage Range	85 Vac to 132 Vac, 50/60 Hz
Outputs per Module	12 (two groups of six outputs each)
Isolation: Field to Backplane (optical) and to Frame Ground Group to Group	 250 Vac continuous; 1500 Vac for 1 minute 250 Vac continuous; 1500 Vac for 1 minute
Output Current	0.5 A maximum per point 1 A maximum per group at 60°C (140°F) 2 A maximum per group at 50°C (122°F) Maximum load current depends on ambient temperature as displayed in Figure 186.
Output Characteristics Inrush Current Minimum Load Current Output Voltage Drop Output Leakage Current On Response Time Off Response Time	 5 A maximum for one cycle 50 mA 1.5 V maximum 3 mA maximum at 120 Vac 1 ms maximum 1/2 cycle maximum
Power Consumption	210 mA (all outputs on) from 5 Vdc bus on the backplane
Fuses (quantity 2)	3 A, part number 44A724627-111. Refer to Section 2.6.4, *Module Fuse List* for more information.

For product standards and general specifications, refer to Appendix A: Product Certifications and Installation Guidelines for Conformance.

7.1.2 Thermal Derating: MDL310

Figure 186: Thermal Derating Curve MDL310

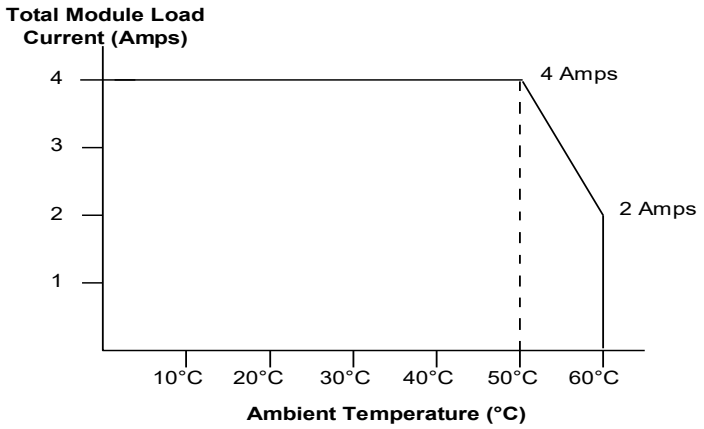
Total Module Load Current (Amps)
4
3
2
1
4 Amps
2 Amps
10°C
20°C
30°C
40°C
50°C
60°C
Ambient Temperature (°C)

7.1.4 Field Wiring: MDL310

Terminal	Connection
1	Output 1
2	Output 2
3	Output 3
4	Output 4
5	Output 5
6	Output 6
7	No connection
8	No connection
9	Outputs 1 - 6 common (return)
10	No connection
11	Output 7
12	Output 8
13	Output 9
14	Output 10
15	Output 11
16	Output 12
17	No connection
18	No connection
19	Outputs 7-10 common (return)
20	No connection

Figure 187: Field Wiring MDL310

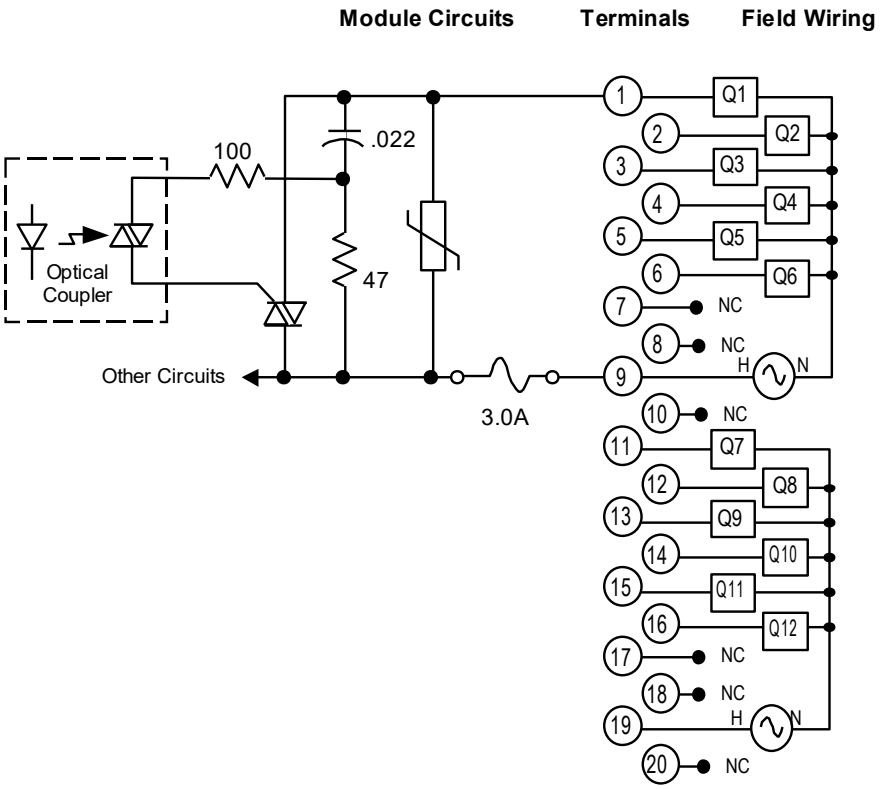

7.2 Output Module, 120/240 Vac, 2 A, 8-Point: IC694MDL330

Figure 188: IC694MDL330

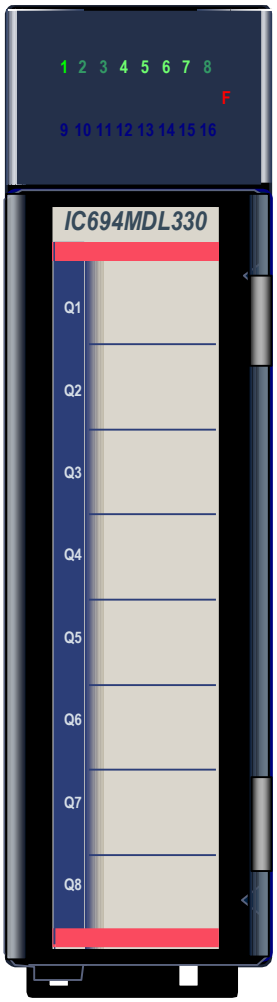

The ***120/240 Vac 2 A Output*** module, IC694MDL330, provides eight output points in two isolated groups of four points. Each group has a separate common. The two commons are not tied together inside Module.

The groups can be used on different phases of the AC supply or powered from the same supply. AC power to operate loads connected to outputs must be user-supplied. This module requires an AC power source; *it cannot be used with a DC power source*.

Each group is protected with a 5 A fuse for each common. An RC snubber for each output protects against transient electrical noise on the power line. This module provides a high degree of inrush current (10 times the rated current) so the outputs can control a wide range of inductive and incandescent loads.

Individual numbered LEDs show the ON/OFF status of each output point. The red LED (F) turns ON if an output fuse blows. The red bands on the label show that MDL330 is a high-voltage module.

This module can be installed in any I/O slot in an RX3i system.

Module supports insertion into and removal from an RX3i Universal Backplane which is under power. Refer to Section 2.6.4, *Hot Insertion and Removal*.

7.2.1 Specifications: MDL330

MDL330	Specifications
Rated Voltage	120/240 Vac
Output Voltage Range	85 to 264 Vac, 50/60 Hz
Outputs per Module	8 (two groups of four outputs each)
Isolation: Field to Backplane (optical) and Frame Ground Group to Group	 250 Vac continuous; 1500 Vac for 1 minute 250 Vac continuous; 1500 Vac for 1 minute
Output Current	2 Amp maximum per point 4 Amps maximum per group at 40°C (104°F) Maximum load current depends on ambient temperature as displayed in Figure 189.
Output Characteristics Inrush Current Minimum Load Current Output Voltage Drop Output Leakage Current On Response Time Off Response Time	 20 A maximum for one cycle 100 mA 1.5 V maximum 3 mA maximum at 120 Vac 6 mA maximum at 240 Vac 1 ms maximum 1/2 cycle maximum
Power Consumption	160 mA (all outputs on) from 5 Vdc bus on the backplane
Fuses (quantity 2)	5 A, part number 44A724627-114. Refer to Section 2.6.4, *Module Fuse List* for more information.

For product standards and general specifications, refer to Appendix A: Product Certifications and Installation Guidelines for Conformance.

7.2.2 Thermal Derating: MDL330

Figure 189: Thermal Derating Curve MDL330

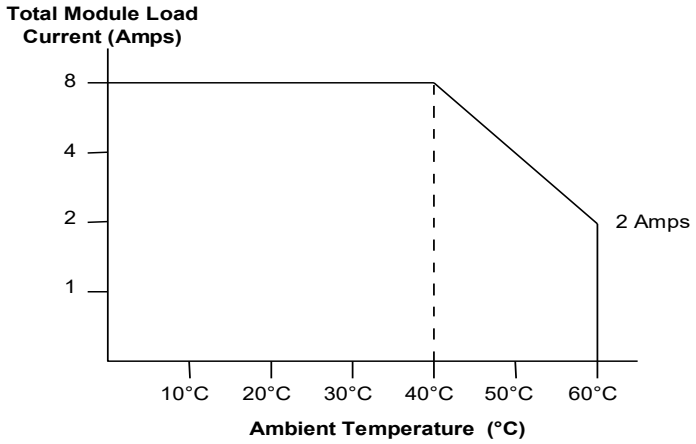
Total Module Load
Current (Amps)
8
4
2
1
2 Amps
10°C
20°C
30°C
40°C
50°C
60°C
Ambient Temperature (°C)

7.2.4 Field Wiring: MDL330

Terminal	Connection
1	No connection
2	Output 1
3	No connection
4	Output 2
5	No connection
6	Output 3
7	No connection
8	Output 4
9	No connection
10	Outputs 1 - 4 common (return)
11	No connection
12	Output 5
13	No connection
14	Output 6
15	No connection
16	Output 7
17	No connection
18	Output 8
19	No connection
20	Outputs 5 - 8 common (return)

Figure 190: Field Wiring MDL330

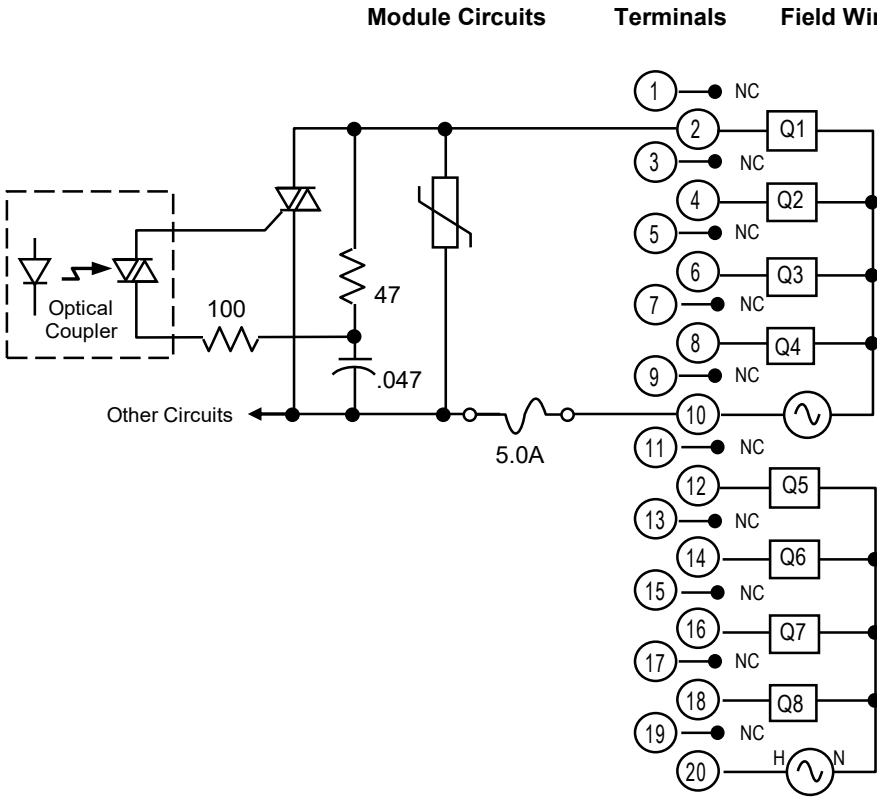

7.3 Output Module, 120 Vac, 0.5 A, 16-Point: IC694MDL340

Figure 191:

IC694MDL340

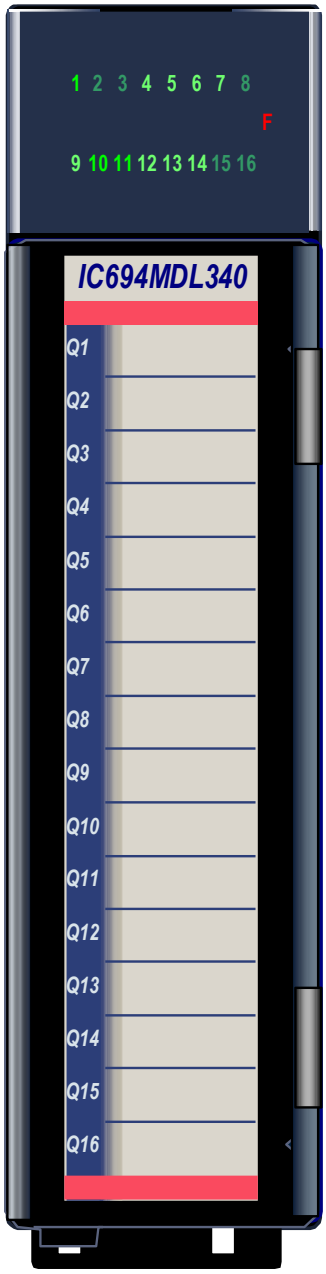

The ***120 Vac 0.5 A Output*** module, IC694MDL340, provides sixteen output points in two isolated groups of eight points. Each group has a separate common. The two commons are not tied together inside Module. The groups can be used on different phases of the AC supply or powered from the same supply. Each group is protected with a 3 A fuse. An RC snubber protects each output against transient electrical noise on the power line. This module provides a high degree of inrush current; so the outputs can control a wide range of inductive and incandescent loads.

AC Power to operate loads connected to outputs must be supplied by the user. This module requires an AC power source.

Individual numbered LEDs show the ON/OFF status of each output point. The red LED (F) turns ON if either of the fuses blows. A load must be connected to the blown fuse for the indicator to light. The red bands on the label show that MDL340 is a high-voltage module.

This module can be installed in any I/O slot in an RX3i system.

Module supports insertion into and removal from an RX3i Universal Backplane which is under power. Refer to Section 2.6.4, *Hot Insertion and Removal*.

7.3.1 Specifications: MDL340

MDL340	Specifications
Rated Voltage	120 Vac
Output Voltage Range	85 to 132 Vac, 50/60 Hz
Outputs per Module	16 (two groups of eight outputs each)
Isolation: Field to Backplane (optical) Frame Ground Group to Group	 250 Vac continuous; 1500 Vac for 1 minute 250 Vac continuous; 1500 Vac for 1 minute
Output Current	0.5 A maximum per point 3 A maximum per group
Output Characteristics Inrush Current Minimum Load Current Output Voltage Drop Output Leakage Current On Response Time Off Response Time	 20 amps maximum for one cycle 50 mA 1.5 V maximum 2 mA maximum at 120 Vac 1 ms maximum 1/2 cycle maximum
Power Consumption	315 mA (all outputs ON) from 5 Vdc bus on the backplane
Fuses (quantity 2)	3 A, part number 44A724627-111. Refer to Section 2.6.4, *Module Fuse List* for more information.

For product standards and general specifications, refer to Appendix A: Product Certifications and Installation Guidelines for Conformance.

7.3.2 Thermal Derating: MDL340

Effective with IC694MDL340C, the following thermal derating applies:

Figure 192: Thermal Derating IC694MDL340C

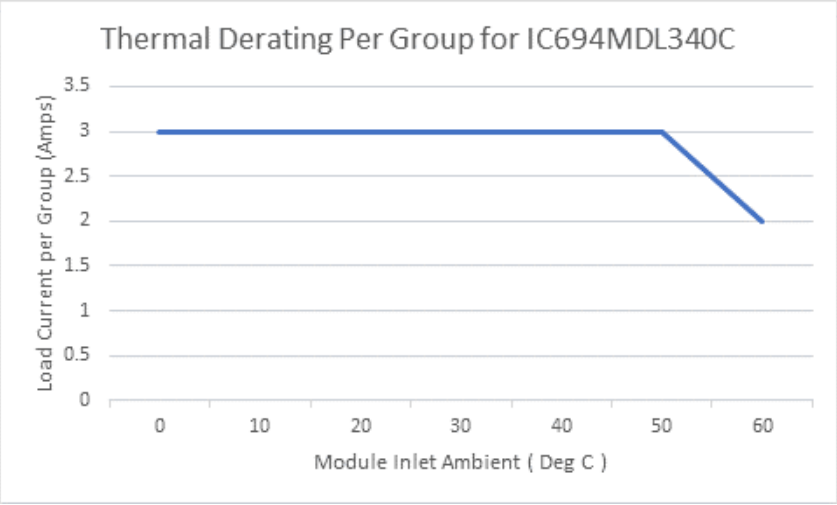

7.3.3 Field Wiring: MDL340

Terminal	Connection
1	Output 1
2	Output 2
3	Output 3
4	Output 4
5	Output 5
6	Output 6
7	Output 7
8	Output 8
9	Outputs 1 – 8 common (return)
10	No connection
11	Output 9
12	Output 10
13	Output 11
14	Output 12
15	Output 13
16	Output 14
17	Output 15
18	Output 16
19	Outputs 9 - 16 common (return)
20	No connection

Figure 193: Field Wiring MDL340

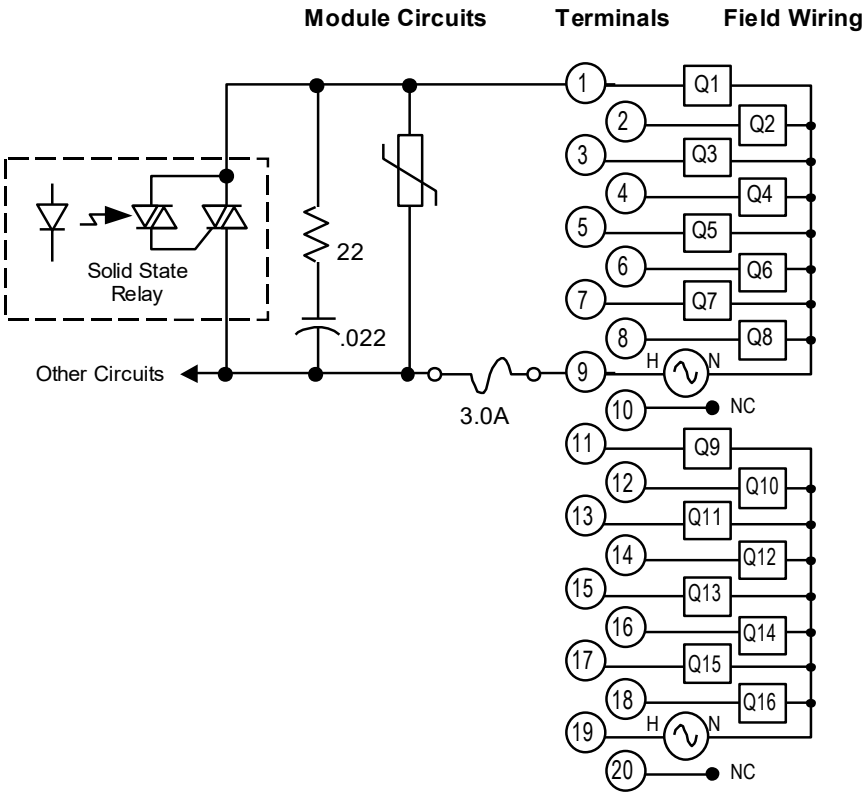

7.4 Output Module, 120/240 Vac 16-Point Isolated: IC694MDL350

Figure 194: IC694MDL350

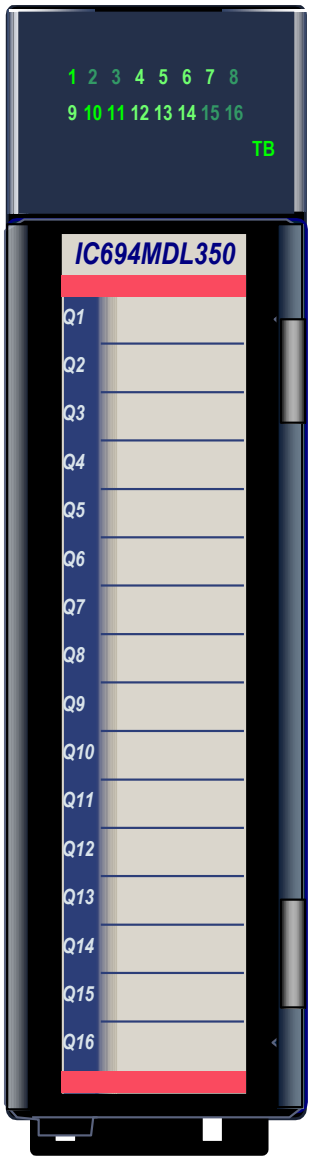

The ***120/240 Vac 16-Point Isolated Output*** module, IC694MDL350, provides sixteen individually-isolated output points. A high level of noise immunity minimizes the need for external snubbers to protect the outputs against transient electrical noise on the power line. The outputs can control a wide range of inductive and incandescent loads.

Power to operate the output loads must be provided with an external AC power supply.

A DIP switch at the rear of Module is used to select the outputs' default mode: Force Off or Hold the Last State. Module must be removed from the backplane to set this switch.

This module can be used with a Box-style (IC694TBB032), Extended Box-style (IC694TBB132), Spring-style (IC694TBS032), or Extended Spring-style (IC694TBS132) Terminal Block. Extended terminal blocks provide the extra shroud depth typically needed for field wiring to AC devices. Refer to Chapter 17 for more information on Terminal Blocks. Terminal Blocks are ordered separately.

Individually numbered LEDs show the ON/OFF status of each output point. The TB LED indicates the presence of the removable Terminal Block. The TB LED is green when the Terminal Block is present or red when the Terminal Block is not present. The red bands on the door card indicate the MDL350 is a high-voltage module.

The IC694MDL350 module can be installed in any I/O slot in an RX3i system.

Module supports insertion into and removal from an RX3i Universal Backplane which is under power. Refer to Section 2.6.4, *Hot Insertion and Removal*.

Module cannot be used with a Series 90-30 PLC CPU.

7.4.1 Specifications: MDL350

MDL350	Specification
Rated Voltage	120/240 Vac
Output Voltage Range	74 – 265 Vac (47 to 63 Hz), 120/240 Vac nominal
Outputs per Module	16 isolated
Isolation: Field to Logic Side Group to Group	 250 Vac continuous; 1500 Vac for 1 minute 250 Vac continuous; 1500 Vac for 1 minute
Power Consumption	315 mA (with all outputs ON) from 5c Vdc bus on the backplane
Diagnostics	Fieldside terminal block status reported to RX3i CPU
Output Current (Linear de-rating)	Per Point 2 A max. at 30°C, 1 A max. at 60°C Per Module 5 A max. at 30°C, 4 A max. at 60°C
Output Characteristics Inrush Current Minimum Load Current Output Voltage Drop Output Leakage Current On, Off Response Times	 20 A maximum for one cycle 10 mA per point 1.5 V maximum 2 mA maximum 1/2 cycle maximum
Fuses	No internal fusing. The use of appropriate external fuses is recommended for short circuit protection.

For product standards and general specifications, refer to Appendix A: Product Certifications and Installation Guidelines for Conformance.

Setting the Output Defaults

The DIP switch at the rear of Module selects the default operation for the output circuits of this module. Module must be removed from the backplane to set this switch. Note that there are two DIP switches on Module. Only the upper switch is used for this module.

Figure 195: DIP Switch Setting

MDL350

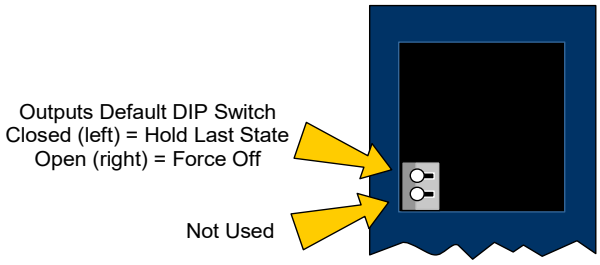

With the Outputs Default Mode switch in the right (open) position, the outputs will turn off whenever communication with the CPU is lost. When the switch is in the left position, the outputs will hold their last programmed value whenever communication with the CPU is lost.

Backplane power and power to the outputs must be present to Hold the Last State. Otherwise, Module will default outputs regardless of the DIP switch setting.

The Outputs Default Mode selection made with the DIP switch must match the selection made for this feature in the software configuration of this module. If the two do not match, a warning message is displayed in the fault table.

7.4.2 Field Wiring: MDL350

Connection	Terminal
Output 1	1
Output 1 Supply	2
Output 2	3
Output 2 Supply	4
Output 3	5
Output 3 Supply	6
Output 4	7
Output 4 Supply	8
Output 5	9
Output 5 Supply	10
Output 6	11
Output 6 Supply	12
Output 7	13
Output 7 Supply	14
Output 8	15
Output 8 Supply	16
No connection	17
No connection	18

Figure 196: Field Wiring MDL350

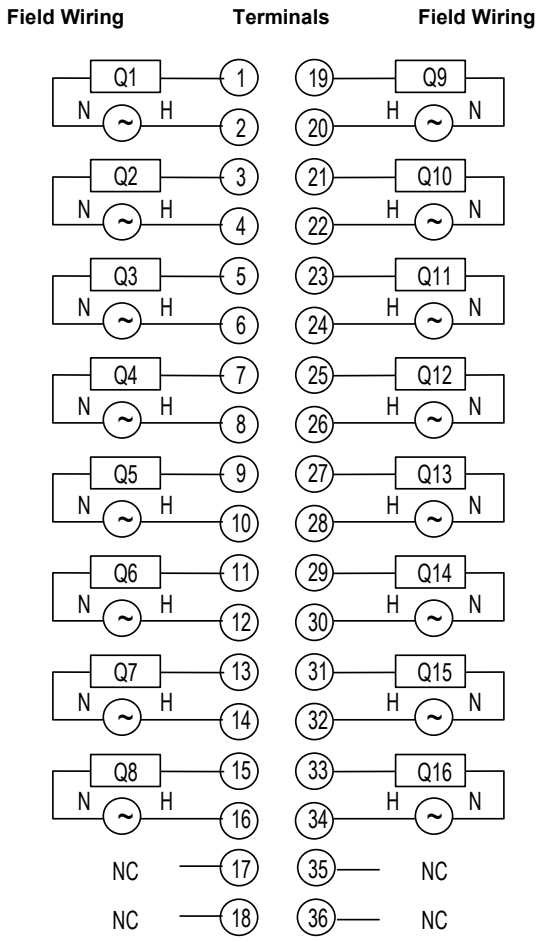

Terminal	Connection
19	Output 9
20	Output 9 Supply
21	Output 10
22	Output 10 Supply
23	Output 11
24	Output 11 Supply
25	Output 12
26	Output 12 Supply
27	Output 13
28	Output 13 Supply
29	Output 14
30	Output 14 Supply
31	Output 15
32	Output 15 Supply
33	Output 16
34	Output 16 Supply
35	No connection
36	No connection

7.4.3 Module Status Data: MDL350

Discrete output module IC694MDL350 provides sixteen bits of status data to the CPU in the assigned Module Status Reference location. By default, the configured length of this status area is 0. To access this data, the length must be changed from 0 to 16.

Module uses the lower 11 input bits to report its status information to the RX3i CPU. It has the following content:

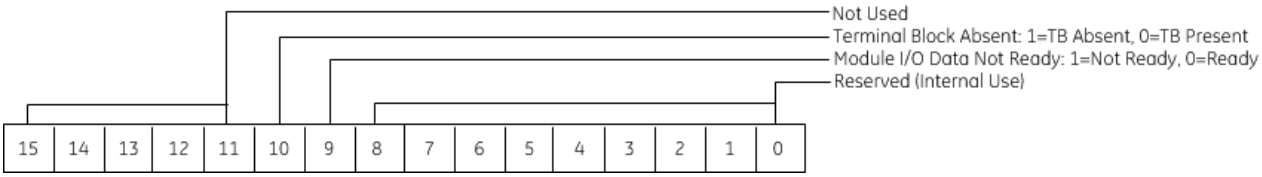

Note: the sense of bit 9 is inverted compared to most other modules. Here “1” indicates *not ready*.

7.5 Output Module, 120/240 Vac Isolated, 2 A 5-Point: IC694MDL390

Figure 197: IC694MDL390

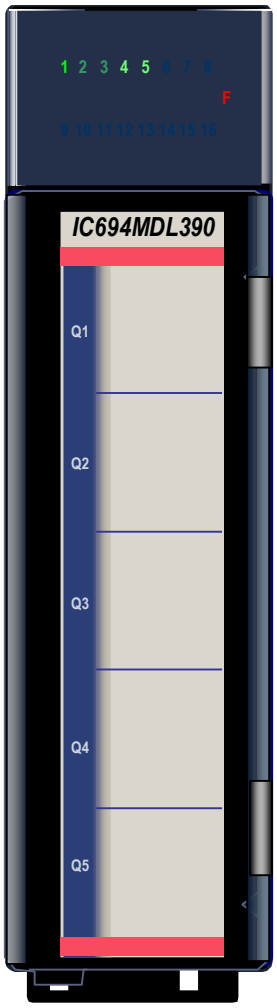

The ***120/240 Vac 2 A Isolated Output*** module, IC694MDL390, provides five isolated output points, each with a separate common. Each output circuit is isolated from the others relative to the AC power source. The commons are not tied together inside Module. The output circuits can be used on different phases of the AC supply or powered from the same supply.

AC Power to operate the loads connected to the outputs must be supplied by the user. *This module requires an AC power source, it cannot be used with a DC power source.*

Outputs are individually fused with a 3 A fuse. An RC snubber protects each output against transient electrical noise on the power line. This module provides a high degree of inrush current (greater than 10 times the rated current) so the outputs can control a wide range of inductive and incandescent loads.

Individual numbered LEDs show the ON/OFF status of each output point. The red LED (F) turns ON if an output fuse blows. The red bands on the label show that MDL390 is a high-voltage module.

This module can be installed in any I/O slot in an RX3i system. It should be configured as an 8-point output module with programs referencing the five least significant bits.

Module supports insertion into and removal from an RX3i Universal Backplane which is under power. Refer to Section 2.6.4, *Hot Insertion and Removal*.

7.5.1 Specifications: MDL390

MDL390	Specifications
Rated Voltage	120/240 Vac
Output Voltage Range	85 to 264 Vac, 50/60 Hz
Outputs per Module	5 (each output isolated from the others)
Isolation: Field to Backplane (optical) and to Frame Ground Point to Point	 250 Vac continuous; 1500 Vac for 1 minute 250 Vac continuous; 1500 Vac for 1 minute
Output Current	2 A maximum per point 5 A maximum per module at 45°C (113°F) 2 A maximum per module at 60°C (140°F) Maximum load current depends on ambient temperature as displayed in Figure 198.
Output Characteristics Inrush Current Minimum Load Current Output Voltage Drop Output Leakage Current On Response Time Off Response Time	 25 A maximum for one cycle 100 mA 1.5 V maximum 3 mA maximum at 120 Vac 6 mA maximum at 240 Vac 1 ms maximum 1/2 cycle maximum
Power Consumption	110 mA (all outputs on) from 5 Vdc bus on the backplane
Fuses (quantity 5)	3 A, part number 44A724627-111. Refer to Section 2.6.4, *Module Fuse List* for more information.

For product standards and general specifications, refer to Appendix A: Product Certifications and Installation Guidelines for Conformance.

7.5.2 Thermal Derating MDL390

Figure 198: Thermal Derating Curve MDL390

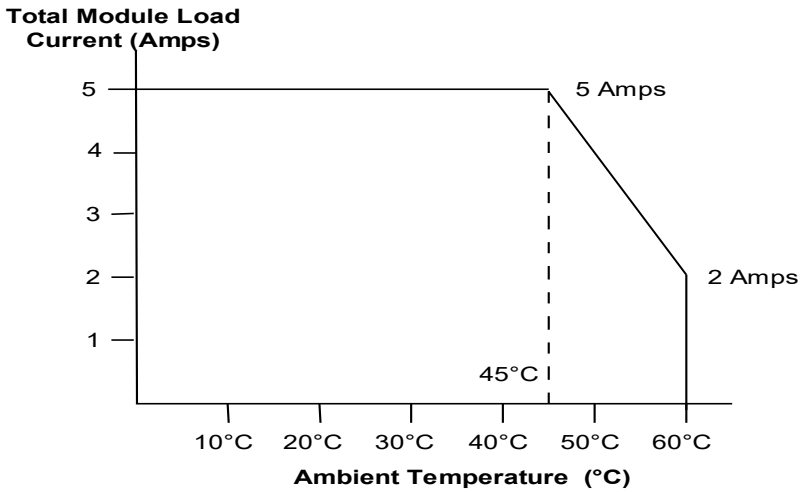

7.5.3 Field Wiring: MDL390

Terminal	Connection
1	No connection
2	Output 1 return
3	No connection
4	Output 1
5	No connection
6	Output 2return
7	No connection
8	Output 2
9	No connection
10	Output 3 return
11	No connection
12	Output 3
13	No connection
14	Output 4 return
15	No connection
16	Output 4
17	No connection
18	Output 5 return
19	No connection
20	Output 5

Figure 199: Field Wiring MDL390

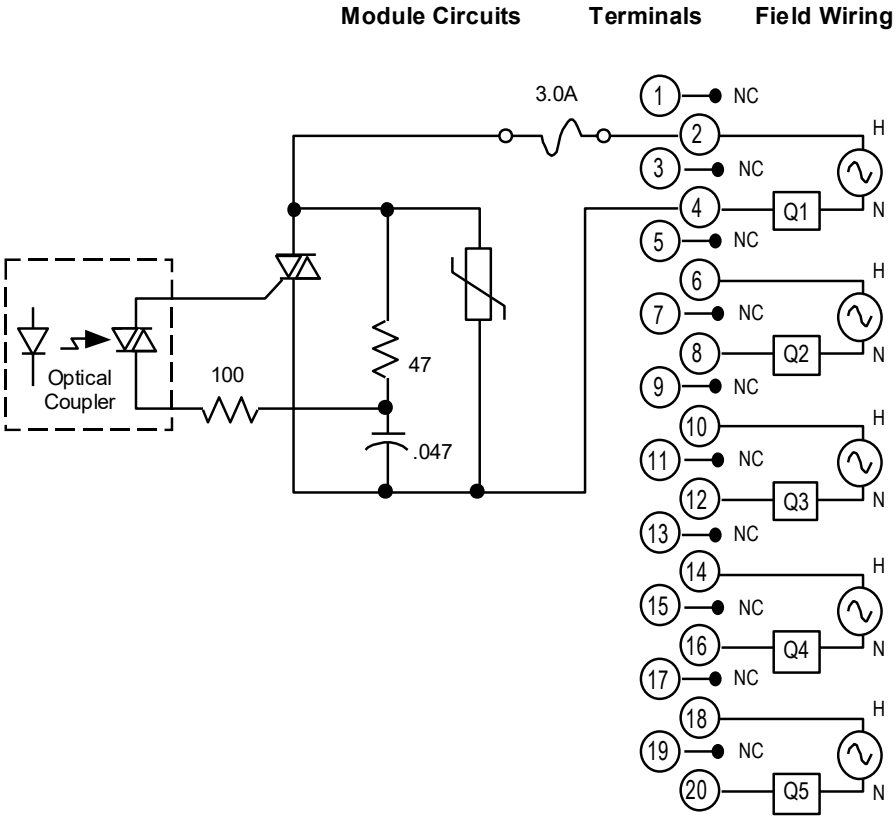

7.6 Output Module, 12/24 Vdc 2 A Positive Logic 8-Point: IC694MDL730

The ***12/24 Vdc 2 A Positive Logic Output*** module, IC694MDL730, provides one group of eight outputs with a common power output terminal. This module has positive logic characteristics; it sources current to the loads from the user common or positive power bus. The output device is connected between the negative power bus and Module output. The output characteristics are compatible with a wide range of load devices, such as motor starters, solenoids, and indicators.

Individual numbered LEDs show the ON/OFF status of each output point.

The red LED (F) turns ON if either of the fuses blows. A load must be connected to the blown fuse for the indicator to light up. Module has two 5 A fuses with each fuse protecting four outputs: the first fuse protects A1 – A4; the second fuse protects A5 – A8. The fuses are electrically connected to the same common.

The blue bands on the label indicate that MDL730 is a low-voltage module.

This module can be installed in any I/O slot in an RX3i or Series 90 30 system.

Module supports insertion into and removal from an RX3i Universal Backplane which is under power. Refer to Section 2.6.4, *Hot Insertion and Removal*.

DC power to operate the field devices is supplied by the user.

Figure 200: IC694MDL730

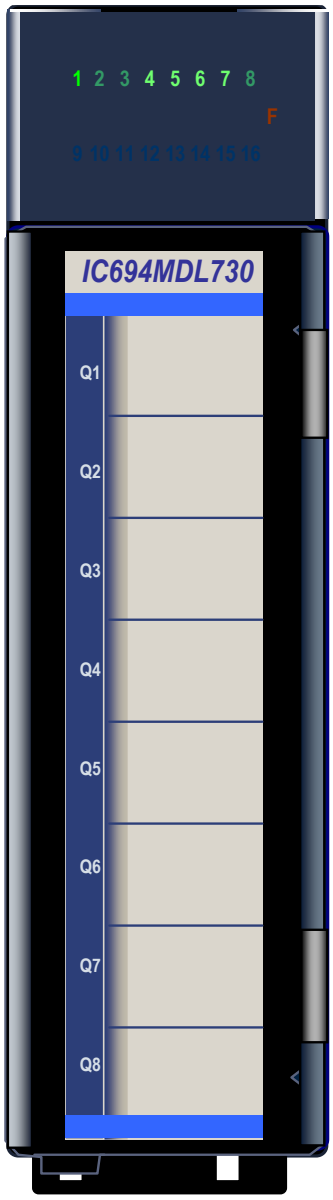

7.6.1 LEDs

LED	Status	Description
Output Status (1-8)	Green	Output is ON
	OFF	Output is OFF
Fuse (F)	OFF	Fuses are OK
	Red	One or more of the fuses is blown

7.6.2 Specifications: MDL730

MDL730	Specifications
Rated Voltage	12/24 Vdc
Output Voltage Range	12 to 24 Vdc (+20%, -15%)
Outputs per Module	8 (one group of eight outputs)
Isolation	1500 V between the field-side and logic side
Output Current[26]	2 A maximum per point 2 A maximum per fuse at 60˚C (140˚F) 4 A maximum per fuse at 50˚C (122˚F)
Output Characteristics Inrush Current Output Voltage Drop Off-state Leakage On Response Time Off Response Time	 9.4 A for 10 ms 1.2 V maximum 1 mA maximum 2 ms maximum 2 ms maximum
Power Consumption	55 mA (all outputs on) from 5 Vdc bus on backplane

7.6.3 Thermal Derating MDL730

Figure 201: Thermal Derating Curve MDL730

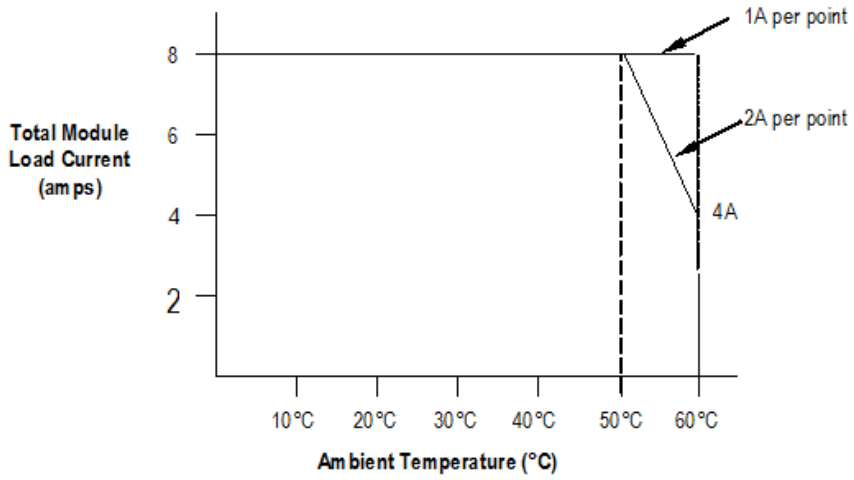

[26] *Maximum load current depends upon surrounding air temperature.*

7.6.4 Field Wiring: MDL730

Field wiring connections to Module are made via the removable terminal assembly described below.

Figure 202: Field Wiring MDL730

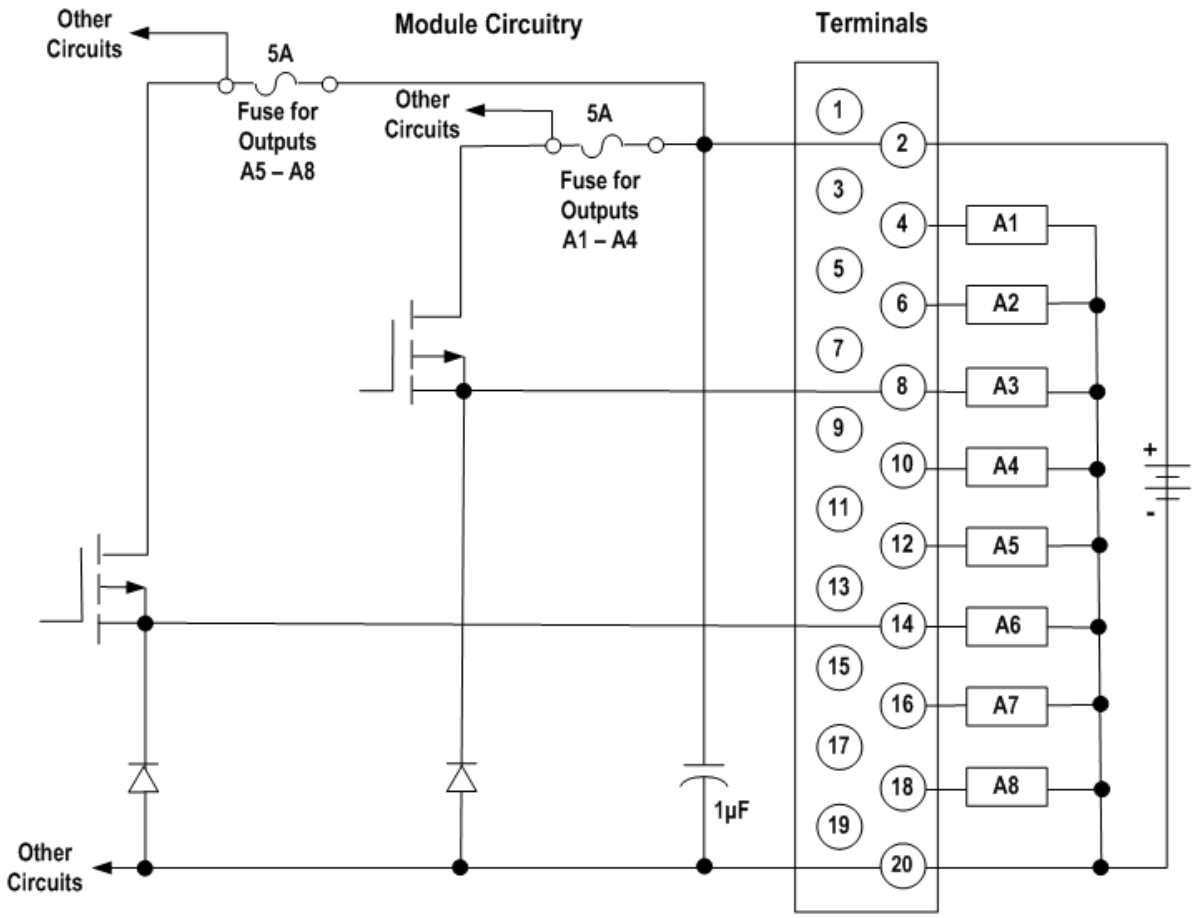

Terminal Assemblies

The MDL730 module has a special terminal assembly that is equipped with holding screws. These screws prevent the terminal assembly to module connections from deteriorating in applications where the controller is subject to severe vibration. To install these terminal assemblies, follow the standard installation instructions in Chapter 17, then tighten the two holding screws to 8 to 10 in-lbs. (1 Nm).

Screw terminals accept two copper wires in the range AWG #22 (0.36 mm^2) to AWG #16 (1.3 mm^2), or one AWG #14 (2.1 mm^2) copper 90°C (194°F) wire. Each terminal can accept solid or stranded wires, but the wires into any

given terminal must be the same type (both solid or both stranded) and the same size. Screw torque is from 9.6 in-lbs. to 11.5 in-lbs. (1.1 Nm to1.3 Nm).

7.7 Output Module, 12/24 Vdc 0.5 A Positive Logic 8-Point: IC694MDL732

Figure 203: IC694MDL732

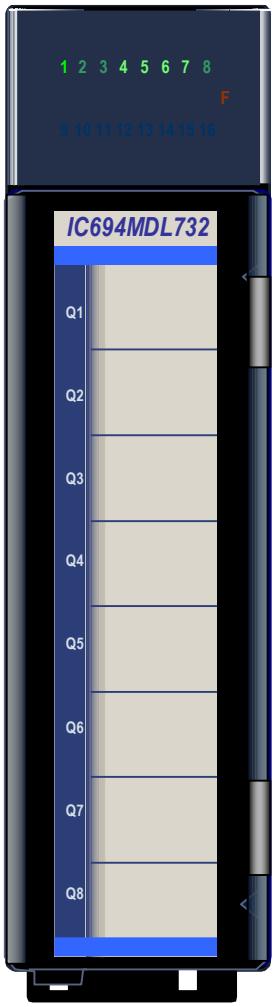

The ***12/24 Vdc 0.5 A Positive Logic Output module***, IC694MDL732, provides one group of eight outputs with a common power output terminal. This module has positive logic characteristics; it sources current to the loads from the user common or positive power bus. The output device is connected between the negative power bus and Module output. The output characteristics are compatible with a wide range of load devices, such as: motor starters, solenoids, and indicators.

Power to operate the field devices must be supplied by the user.

Individual numbered LEDs show the ON/OFF status of each output point. There are no fuses on this module. The blue bands on the label show that MDL732 is a low-voltage module.

This module can be installed in any I/O slot in an RX3i system.

Module supports insertion into and removal from an RX3i Universal Backplane which is under power. Refer to Section 2.6.4, Hot Insertion and Removal.

7.7.1 Specifications: MDL732

MDL732	Specifications
Rated Voltage	12/24 Vdc
Output Voltage Range	12 to 24 Vdc (+20%, -15%)
Outputs per Module	8 (one group of eight outputs)
Isolation: Field to Backplane (optical) and to Frame Ground	250 Vac continuous; 1500 Vac for 1 minute
Output Current	0.5 A maximum per point 2 A maximum per common
Output Characteristics Inrush Current Output Voltage Drop Off-state Leakage On Response Time Off Response Time	 4.78 A for 10 ms 1 V maximum 1 mA maximum 2 ms maximum 2 ms maximum
Power Consumption	50 mA (all outputs on) from 5 Vdc bus on the backplane

For product standards and general specifications, refer to Appendix A: Product Certifications and Installation Guidelines for Conformance.

7.7.2 Field Wiring: MDL732

Terminal	Connection
1	DC+
2	Output 1
3	Output 2
4	Output 3
5	Output 4
6	Output 5
7	Output 6
8	Output 7
9	Output 8
10	Outputs 1 - 8 common (return)
11	No connection
12	No connection
13	No connection
14	No connection
15	No connection
16	No connection
17	No connection
18	No connection
19	No connection
20	No connection

Figure 204: Field Wiring MDL732

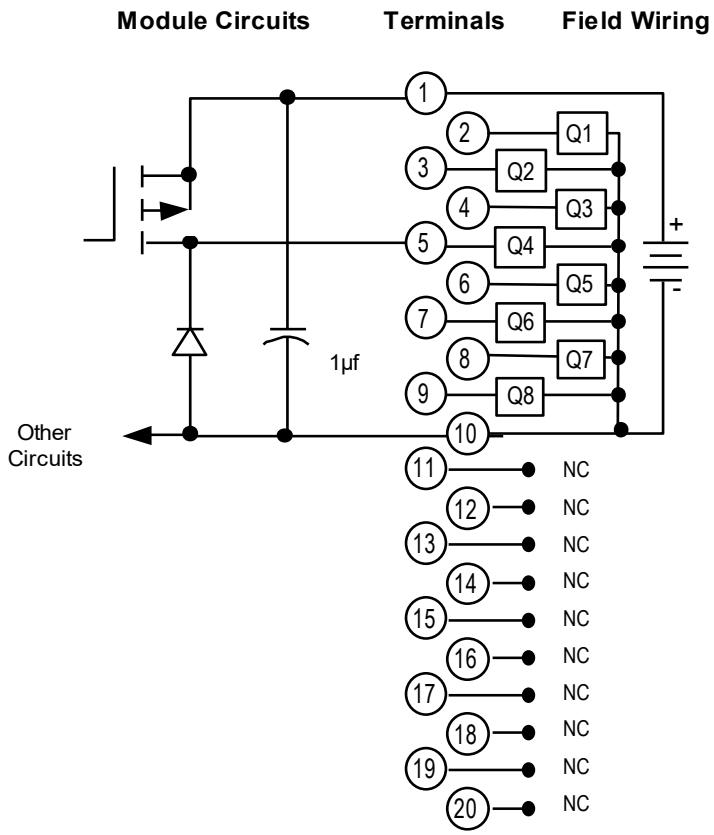

7.8 Output Module 125 Vdc, 1 A, 6-Point Isolated Positive/Negative: IC694MDL734

Figure 205: IC694MDL734

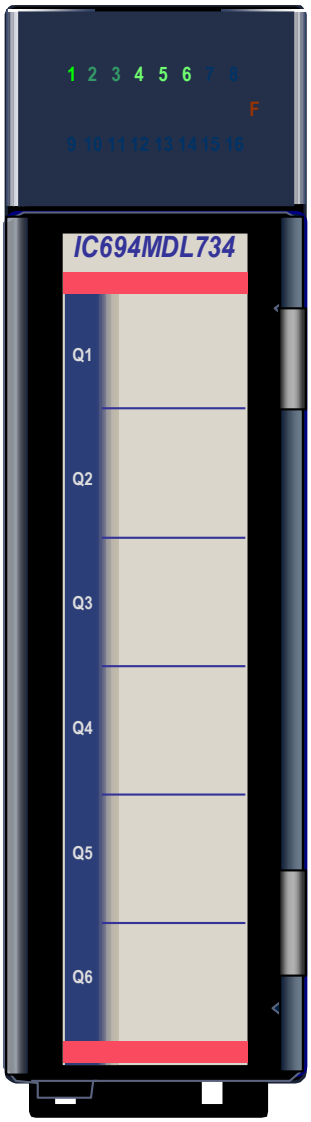

The ***125 Vdc 1 A Positive/Negative Logic Output*** module, IC694MDL734, provides six isolated output points. Each output point has a separate common terminal. This output module can be wired to have either *positive logic* characteristics so that it sources current to the loads from the user common or positive power bus; or *negative logic* characteristics so that it sinks current from the loads to the user common or negative power bus. The output characteristics are compatible with a wide range of load devices, such as: motor starters, solenoids, and indicators.

Power to operate the field devices must be supplied by the user. External fusing is recommended. Two Amp loads can be driven by wiring and driving two outputs in parallel.

Individual numbered LEDs show the ON/OFF status of each output point. There are no fuses on this module. The red bands on the label show that MDL734 is a high-voltage module.

This module can be installed in any I/O slot in an RX3i system.

Module supports insertion into and removal from an RX3i Universal Backplane which is under power. Refer to Section 2.6.4, *Hot Insertion and Removal*.

7.8.1 Specifications: MDL734

MDL734	Specifications
Rated Voltage	125 Vdc
Output Voltage Range	+10.8 to +150 Vdc
Outputs per Module	6 (isolated)
Isolation: Field to Backplane (optical) and to Frame Ground	 250 Vac continuous; 1500 Vac for 1 minute
Point to Point	250 Vac continuous; 1500 Vac for 1 minute
Output Current	1 A maximum per point
Output Characteristics Inrush Current Output Voltage Drop Off-state Leakage On Response Time Off Response Time	 7 A for 100 ms at 2% duty cycle, using 2 outputs wired in parallel 1 V maximum 1 mA maximum 7 ms maximum 5 ms maximum
Power Consumption	90 mA (all outputs on) from 5 Vdc bus on backplane

For product standards and general specifications, refer to Appendix A: Product Certifications and Installation Guidelines for Conformance.

7.8.2 Field Wiring: MDL734

Terminal	Positive Logic Connection	Negative Logic Connection
1	Output 1	Output 1 return (DC+)
2	Output 1 return (DC+)	Output 1
3	Output 2	Output 2 return (DC+)
4	Output 2 return (DC+)	Output 2
5	No connection	No connection
6	No connection	No connection
7	Output 3	Output 3 return (DC+)
8	Output 3 return (DC+)	Output 3
9	Output 4	Output 4 return (DC+)
10	Output 4 return (DC+)	Output 4
11	No connection	No connection
12	No connection	No connection
13	Output 5	Output 5 return (DC+)
14	Output 5 return (DC+)	Output 5
15	Output 6	Output 6 return (DC+)
16	Output 6 return (DC+)	Output 6
17	No connection	No connection
18	No connection	No connection
19	No connection	No connection
20	No connection	No connection

Figure 206: Field Wiring MDL734

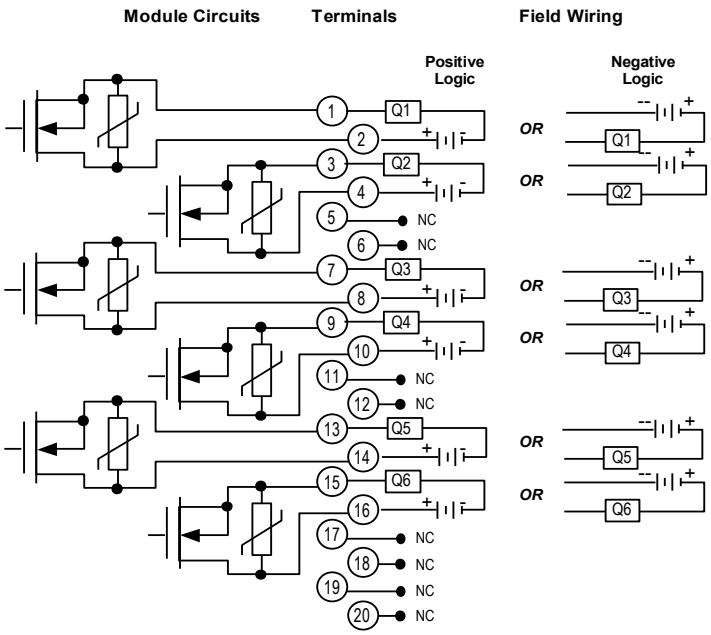

7.9 Output Module, 12/24 Vdc, 0.5 A, Positive Logic, 16-Point: IC694MDL740

Figure 207: IC694MDL740

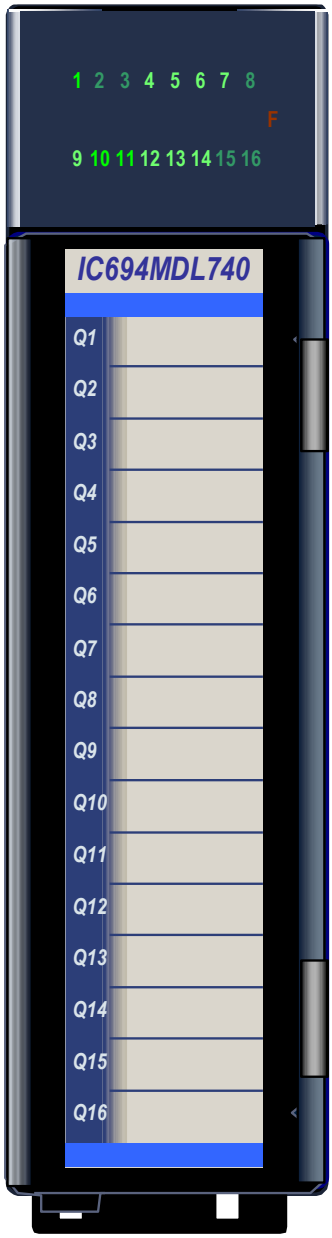

The ***12/24 Vdc 0.5 A Positive Logic Output*** module, IC694MDL740, provides sixteen output points in two groups of eight. Each group has a common power output terminal. Module has positive logic characteristics; it sources current to the loads from the user common or positive power bus. Output devices are connected between the negative power bus and Module terminals. The output characteristics of this module are compatible with a wide range of load devices, such as: motor starters, solenoids, and indicators. Power to operate the field devices must be supplied by the user.

Individual numbered LEDs show the ON/OFF status of each output point. There are no fuses on this module. The blue bands on the label show that MDL740 is a low-voltage module.

This module can be installed in any I/O slot in an RX3i system.

Module supports insertion into and removal from an RX3i Universal Backplane which is under power. Refer to Section 2.6.4, *Hot Insertion and Removal*.

7.9.1 Specifications: MDL740

MDL740	Specifications
Rated Voltage	12/24 Vdc
Output Voltage Range	12 to 24 Vdc (+20%, -15%)
Outputs per Module	16 (two groups of eight outputs each)
Isolation: Field to Backplane (optical) and to Frame Ground	 250 Vac continuous; 1500 Vac for 1 minute
Group to Group	250 Vac continuous; 1500 Vac for 1 minute
Output Current	0.5 A maximum per point 2 A maximum per common
Power Consumption	110 mA (all outputs on) from 5 Vdc bus on the backplane
Output Characteristics Inrush Current Output Voltage Drop Off-state Leakage On Response Time Off Response Time	 4.78 A for 10 ms 1 V maximum 1 mA maximum 2 ms maximum 2 ms maximum

For product standards and general specifications, refer to Appendix A: Product Certifications and Installation Guidelines for Conformance.

7.9.2 Field Wiring: MDL740

Terminal	Connection
1	DC +
2	Output 1
3	Output 2
4	Output 3
5	Output 4
6	Output 5
7	Output 6
8	Output 7
9	Output 8
10	Outputs 1 – 8 common (return)
11	DC +
12	Output 9
13	Output 10
14	Output 11
15	Output 12
16	Output 13
17	Output 14
18	Output 15
19	Output 16
20	Outputs 9 - 16 common (return)

Figure 208: Field Wiring MDL740

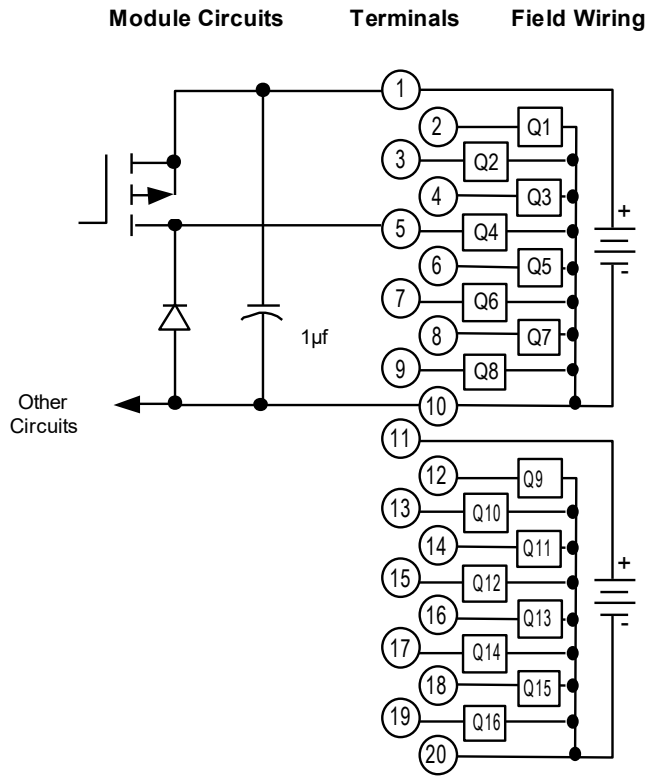

7.10 Output Module, 12/24 Vdc, 0.5 A, Negative Logic 16-Point: IC694MDL741

Figure 209: IC694MDL741

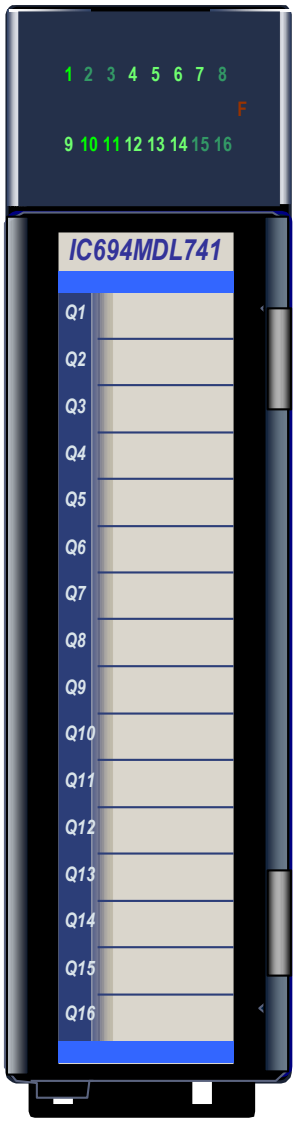

The ***12/24 Vdc 0.5 A Negative Logic Output*** module, IC694MDL741, provides sixteen output points in two groups. Each group has a common power output terminal. This output module has negative logic characteristics; it sinks current from the loads to the user common or negative power bus. Output devices are connected between the positive power bus and the output terminals. The output characteristics of this module are compatible with a wide range of load devices, such as: motor starters, solenoids, and indicators. Power to operate the field devices must be supplied by the user.

Individual numbered LEDs show the ON/OFF status of each output point. There are no fuses on this module.

The blue bands on the label show that MDL741 is a low-voltage module.

This module can be installed in any I/O slot in an RX3i system.

Module supports insertion into and removal from an RX3i Universal Backplane which is under power. Refer to Section 2.6.4, *Hot Insertion and Removal*.

7.10.1 Specifications: MDL741

MDL741	Specifications
Rated Voltage	12/24 Vdc
Output Voltage Range	12 to 24 Vdc (+20%, -15%)
Outputs per Module	16 (two groups of eight outputs each)
Isolation: Field to Backplane (optical) Frame Ground	 250 Vac continuous; 1500 Vac for 1 minute
Group to Group	250 Vac continuous; 1500 Vac for 1 minute
Output Current	0.5 A maximum per point 2 A maximum per common
Power Consumption	110 mA (all outputs on) from 5 Vdc bus on backplane
Output Characteristics Output Voltage Drop Off-state Leakage On Response Time Off Response Time	 0.5 V maximum 1 mA maximum 2 ms maximum 2 ms maximum

For product standards and general specifications, refer to Appendix A: Product Certifications and Installation Guidelines for Conformance.

7.10.2 Field Wiring: MDL741

Terminal	Connection
1	Outputs 1 – 8 common (DC+)
2	Output 1
3	Output 2
4	Output 3
5	Output 4
6	Output 5
7	Output 6
8	Output 7
9	Output 8
10	DC–
11	Outputs 9 – 16 common (DC+)
12	Output 9
13	Output 10
14	Output 11
15	Output 12
16	Output 13
17	Output 14
18	Output 15
19	Output 16
20	DC–

Figure 210: Field Wiring MDL741

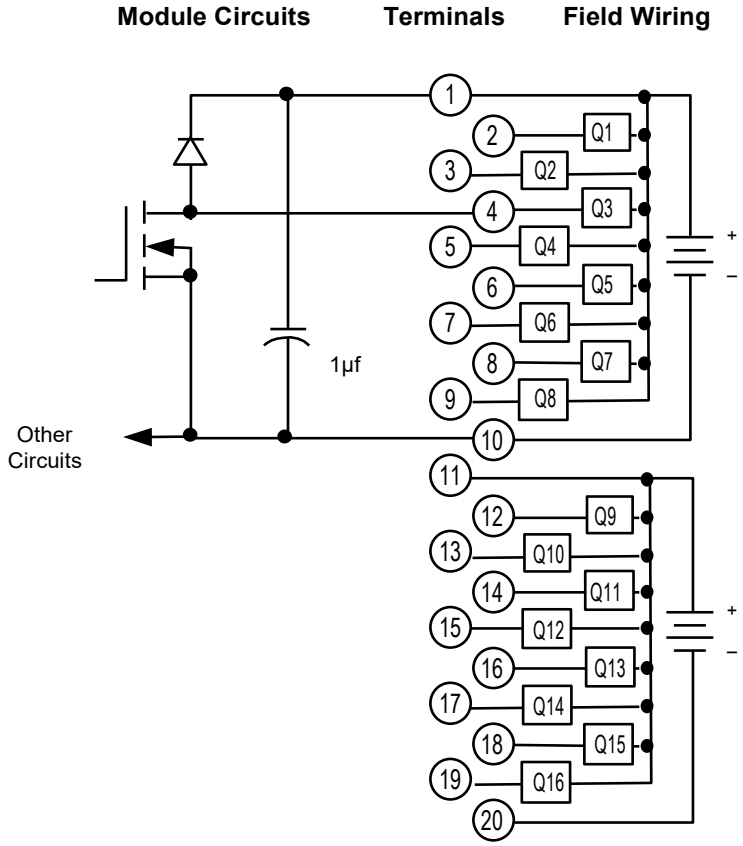

7.11 Output Module, 12/24 Vdc 1 A Positive Logic, 16-Point with ESCP per Group: IC694MDL742

Figure 211: IC694MDL742

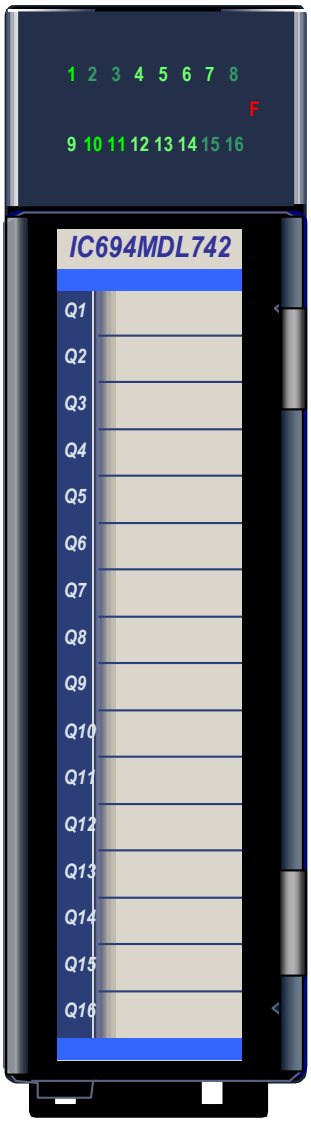

The ***12/24 Vdc 1 A Positive Logic Electronic Short Circuit Protection (ESCP) Output*** module, IC694MDL742, provides sixteen output points in two groups of eight. Each group has a common power output terminal. This output module has positive logic characteristics: it sources current to the loads from the user common or positive power bus. Output devices are connected between the negative power bus and the output terminals. The output characteristics of this module are compatible with a wide range of load devices, such as: motor starters, solenoids, and indicators.

Power to operate the field devices must be supplied by the user.

Individual numbered LEDs show the ON/OFF status of each output point. There are no fuses on this module. The red LED (F) in Module header indicates electronic short circuit protection trips. The blue bands on the label show that MDL742 is a low-voltage module.

This module can be installed in any I/O slot in an RX3i system.

Module supports insertion into and removal from an RX3i Universal Backplane which is under power. Refer to Section 2.6.4, *Hot Insertion and Removal*.

7.11.1 Electronic Short-Circuit Protection (ESCP)

Module MDL742 has two Electronic Short Circuit Protection circuits. The first circuit protects points 1 to 8 and the second protect points 9 to 16. Module electronically monitors the common signal for each group. If a short circuit occurs, Module turns off the output points in that group, and turns on the red LED (F). The point LEDs do not turn off. Electronic Short Circuit Protection does not prevent individual outputs from exceeding their ratings, but it protects Module in case of a short-circuited load. Electronic Short Circuit Protection is reset by cycling the 12/24 Vdc user power to Module.

7.11.2 Specifications: MDL742

MDL742	Specifications
Rated Voltage	12/24 Vdc
Output Voltage Range	12 to 24 Vdc (+20%, -15%)
Outputs per Module	16 (two groups of eight outputs each)
Isolation: Field to Backplane (optical) Frame Ground Group to Group	 250 Vac continuous; 1500 Vac for 1 minute 250 Vac continuous; 1500 Vac for 1 minute
Output Current	1 A maximum per point 4 A maximum per group at 50°C 3 A maximum per group at 60°C Maximum total load current depends on the ambient temperature as displayed in Figure 212.
Power Consumption	130 mA (all outputs on) from 5 Vdc bus on backplane
Output Characteristics Inrush Current Output Voltage Drop Off-state Leakage On Response Time Off Response Time	 5.2 A for 10 ms 1.2 volts maximum 1 mA maximum 2 ms maximum 2 ms maximum

For product standards and general specifications, refer to Appendix A: Product Certifications and Installation Guidelines for Conformance.

7.11.3 Thermal Derating: MDL742

Figure 212: Thermal Derating Curve MDL742

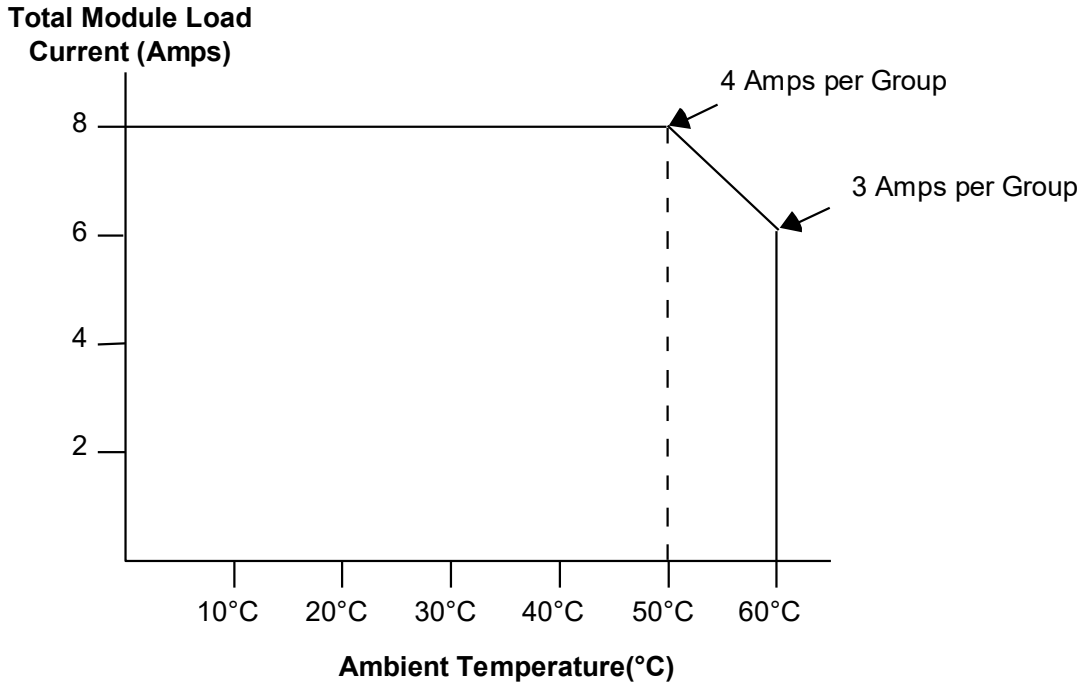

7.11.4 Field Wiring: MDL742

Terminal	Connection
1	DC +
2	Output 1
3	Output 2
4	Output 3
5	Output 4
6	Output 5
7	Output 6
8	Output 7
9	Output 8
10	Outputs 1 – 8 common (return)
11	DC +
12	Output 9
13	Output 10
14	Output 11
15	Output 12
16	Output 13
17	Output 14
18	Output 15
19	Output 16
20	Outputs 9 - 16 common (return)

Figure 213: Field Wiring MDL742

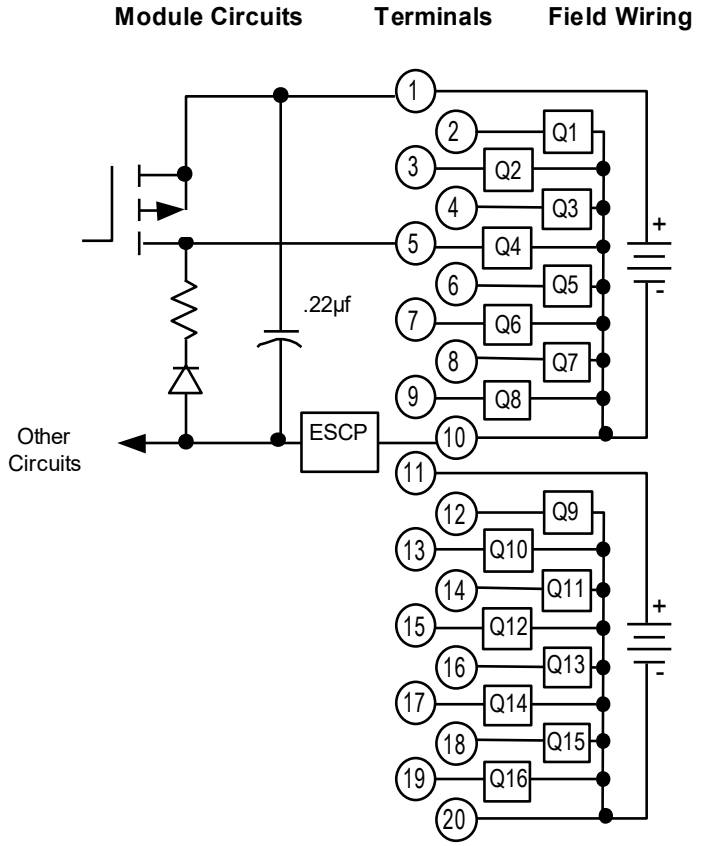

7.12 Output Module, 5/24 Vdc (TTL) Negative Logic, 32-Point: IC694MDL752

Figure 214: IC694MDL752

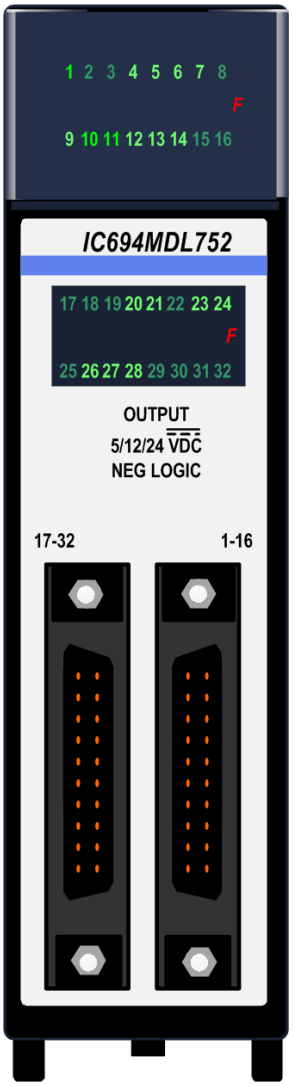

The ***5/24 Vdc (TTL) Negative Logic Outpu***t module, IC694MDL752, provides thirty-two discrete outputs arranged in four isolated groups of eight. Each group has its own common. The outputs are negative logic or sinking-type outputs (the ON state for a point results in an active low output).

Module has two modes of operation. In TTL mode, the outputs can switch loads across +5 Vdc (±5%) and are capable of sinking a maximum current of 25 mA per point. In 12/24 V mode, the outputs can switch loads over the range of +12 to -24 Vdc (+20%, -15%) and are capable of sinking a maximum current of 0.5 A per point.

There are two pins on the I/O connectors for each group common. Each pin has a current-handling capacity of 3 A. It is recommended that connections be made to both pins when connecting the common; however, it is required for high-current applications (between 3 and 4 Amps).

Each group can be used to drive different loads. For example, Module can drive TTL loads, 12 Vdc loads, and 24 Vdc loads on different groups. It is important to consider the effects of electrical noise when mixing TTL and inductive-type loads.

Each point has an internal pull–up resistor. The resistor passively pulls up the output to the user positive side power input (typically +5 V for TTL mode) when the output point FET is OFF, providing a high logic level for TTL applications. All 32 outputs are forced OFF when the CPU is stopped.

Power to provide current to the loads must be provided by the user. Module also draws a minimum amount of power from the user supply to provide gate drive to the output devices

Backplane isolation between the field-side and logic side is provided by optocoupler on Module. No special fault or alarm diagnostics are reported. Individual numbered LEDs show the ON/OFF status of each output.

This module can be installed in any I/O slot in an RX3i system.

Module supports insertion into and removal from an RX3i Universal Backplane which is under power. Refer to Section 2.6.4, *Hot Insertion and Removal*.

7.12.1 Specifications: MDL752

MDL752	Specifications
Rated Voltage	5 Vdc and 12 through 24 Vdc, negative logic (active low)
Output Voltage Range	4.75 to 5.25 Vdc (TTL mode) 10.2 to 28.8 Vdc (12/24V mode)
Outputs per Module	32 (four groups of eight outputs each)
Isolation: Field to Backplane (optical) and to Frame Ground Group to Group	 250 Vac continuous; 1500 Vac for 1 minute 50 Vac continuous; 500 Vac for 1 minute
Output Current	25 mA per point (maximum in TTL mode) 0.5 A per point (maximum in 12/24 V mode); with 4 A maximum per group and 3 A maximum per group common pin
Power Consumption	260 mA (maximum) from 5 Vdc bus on backplane; (13 mA + 3 mA/point ON + 4.7 mA/LED)
	12 mA (maximum) per group from user supply at 5 Vdc and all eight outputs in group ON
	25 mA (maximum) per group from user supply at 12 Vdc and all eight outputs in group ON
	44 mA (maximum) per group from user supply at 24 Vdc and all eight outputs in group ON
Output Characteristics	
Inrush Current On–state (active low) Voltage Drop Off-state Leakage Current On Response Time Off Response Time	4.6 A for 10ms 0.4 Vdc (maximum in TTL mode) 0.24 Vdc (maximum in 12/24 V mode) 0.1 mA maximum 0.5 ms maximum 0.5 ms maximum

For product standards and general specifications, refer to Appendix A: Product Certifications and Installation Guidelines for Conformance.

7.12.2 Field Wiring: MDL752

Connections to the output circuits are made from the load devices to two male 24–pin D-connectors (Fujitsu FCN–365P024–AU) on the front of Module.

The connectors on this module can be connected directly to field devices using a cable having a mating female connector on one end and stripped and tinned wires on the other end. You can purchase a pair of pre-wired cables, catalog numbers IC693CBL327 and IC693CBL328 or build cables. Refer Chapter 17 of this manual for more information.

Connections can also be made a pair of cables with connectors on each end. These cables connect Module with DIN-rail mounted terminal blocks as described in Chapter 17.

Figure 215: Field Wiring Pinouts MDL752

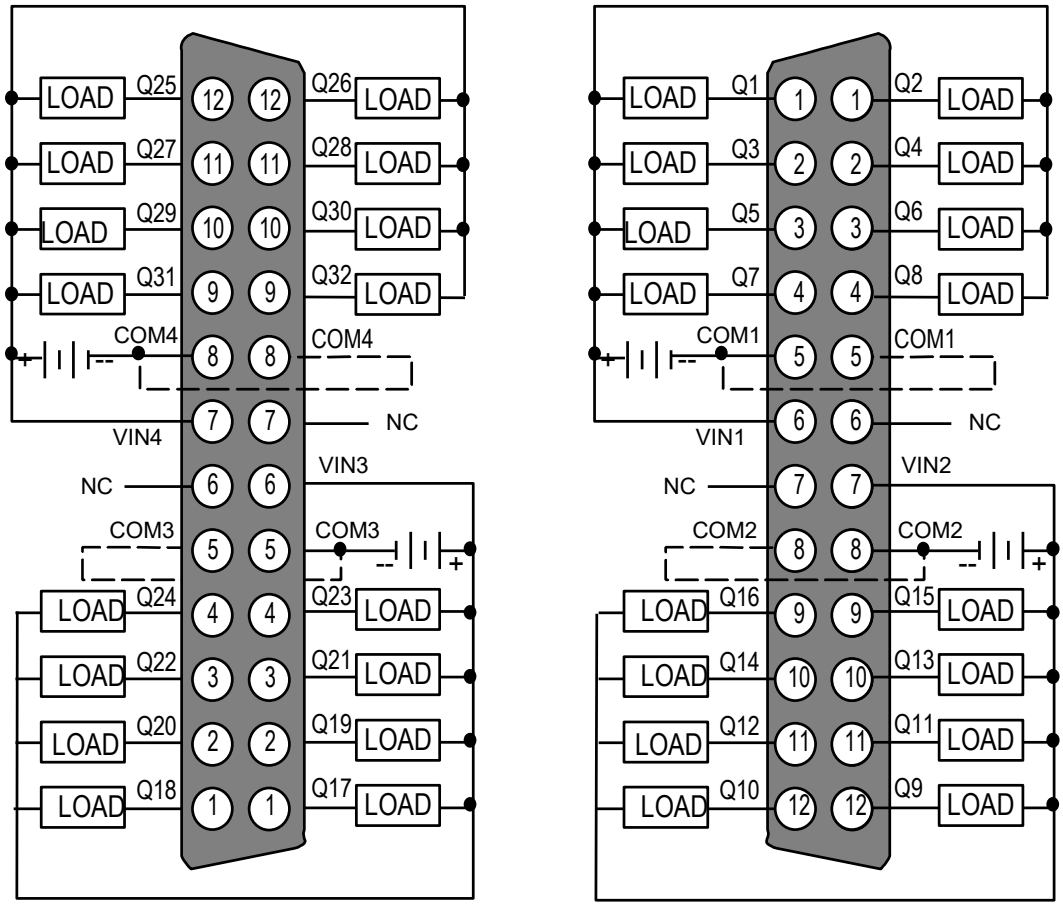

7.12.3 Typical Connections: MDL752

Figure 216: Typical Connections Diagram MDL752

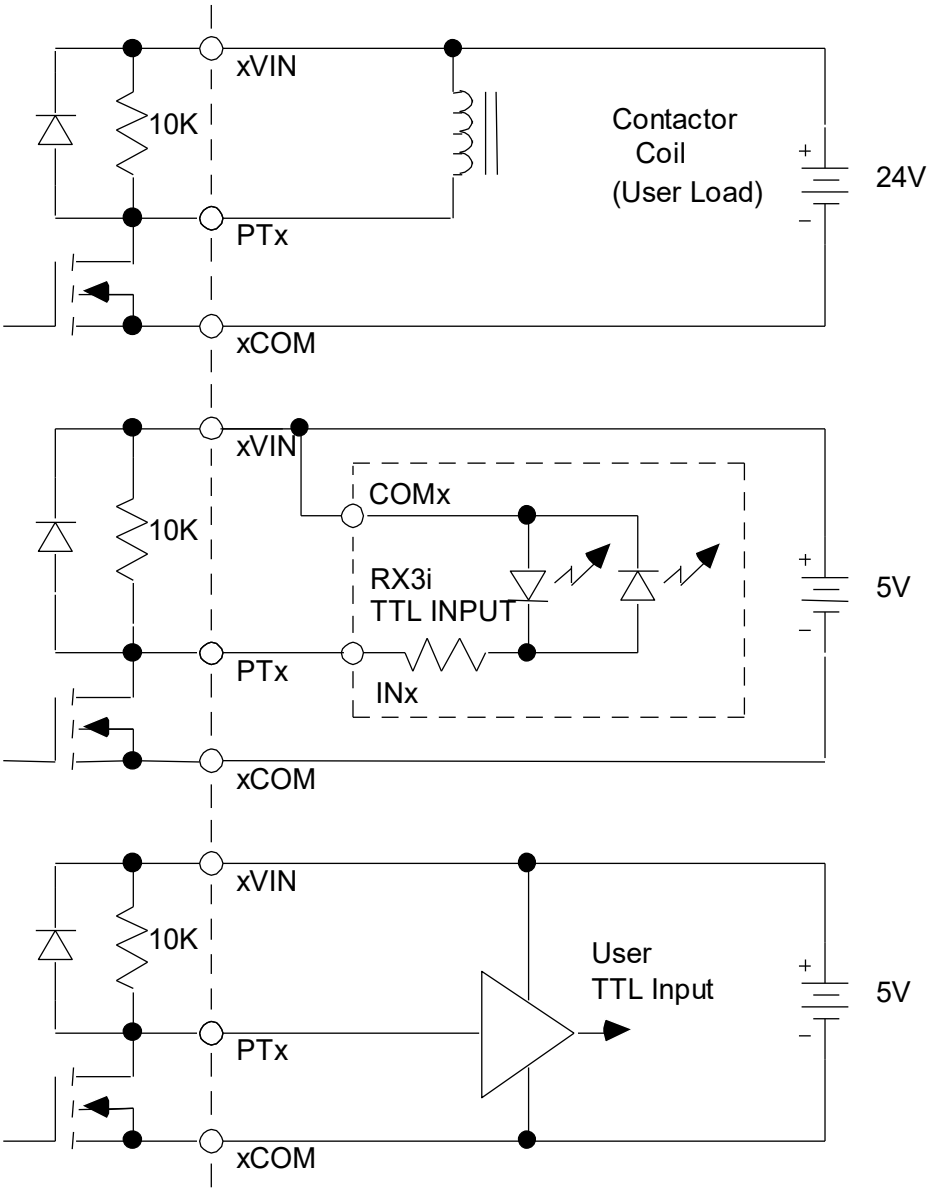

7.13 Output Module, 12/24 Vdc, 0.5 A Positive Logic, 32-Point: IC694MDL753

Figure 217: IC694MDL753

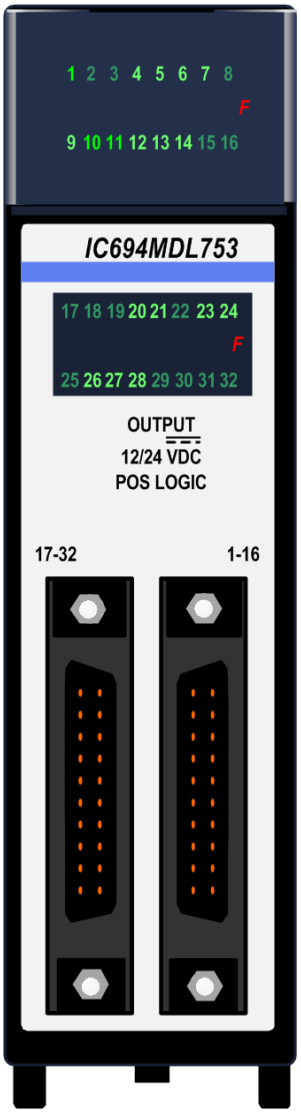

The ***12/24 Vdc 0.5 A Positive Logic Output*** module, IC694MDL753, provides thirty-two discrete outputs in four isolated groups of eight. Each group has its own common. The outputs are positive logic or sourcing type outputs; they switch the loads on the positive side of the power supply, and supply current to the load. The outputs can switch user loads over the range of +12 to +24 Vdc (+20%, -15%) and can source a maximum current of 0.5 A per point. There are two pins on the I/O connectors for each group common. Each pin has a current handling capacity of 3 A. It is recommended that connections be made to both pins when connecting the common; however, it is required for high-current applications (between 3 and 4 Amps).

Each group can be used to drive different loads. For example, three groups might drive 24 Vdc loads, while the fourth was reserved for driving 12 Vdc loads.

Power to provide current to the loads must be provided by the user. Module also draws a minimum amount of power from the user supply to provide gate drive to the output devices.

Backplane isolation between the field-side and logic side is provided by optocouplers on Module.

All 32 outputs are forced OFF when the CPU is stopped. No special fault or alarm diagnostics are reported. Individual numbered LEDs show the ON/OFF status of each output.

This module can be installed in any I/O slot in an RX3i system.

Module supports insertion into and removal from an RX3i Universal Backplane which is under power. Refer to Section 2.6.4, *Hot Insertion and Removal*.

7.13.1 Specifications: MDL753

MDL753	Specifications
Rated Voltage	12 through 24 Vdc, positive logic
Output Voltage Range	10.2 to 28.8 Vdc
Outputs per Module	32 (four groups of eight outputs each)
Isolation: Field to Backplane (optical) and to Frame Ground Group to Group	 250 Vac continuous; 1500 Vac for 1 minute 50 Vac continuous; 500 Vac for 1 minute
Output Current	0.5 A per point with 4 A maximum per group and 3 A maximum per group common pin
Power Consumption	260 mA (maximum) from 5 Vdc bus on backplane; (13 mA + 3 mA/point ON + 4.7 mA/LED) 16.5 mA (maximum) per group from user supply at 24 Vdc and all eight outputs in group ON 9.6 mA (maximum) per group from user supply at 12 Vdc and all eight outputs in group ON
Output Characteristics Inrush Current On–state Voltage Drop Off-state Leakage Current On Response Time Off Response Time	 5.4 A for 10 ms 0.3 Vdc 0.1 mA maximum 0.5 ms maximum 0.5 ms maximum

For product standards and general specifications, refer to Appendix A: Product Certifications and Installation Guidelines for Conformance.

7.13.2 Field Wiring: MDL753

Connections to the output circuits are made from the load devices to two male 24–pin D-connectors (Fujitsu FCN–365P024–AU) on the front of Module. The connectors on this module can be wired directly to field devices using a cable having a mating female connector on one end and stripped and tinned wires on the other end. You can purchase a pair of pre-wired cables, catalog numbers IC693CBL327 and IC693CBL328 or build cables. Refer to Chapter 17 of this manual for more information.

Connections can also be made a pair of cables with connectors on each end. These cables connect Module with DIN-rail mounted terminal blocks as described in Chapter 17.

Figure 218: Field Wiring Pinouts MDL753

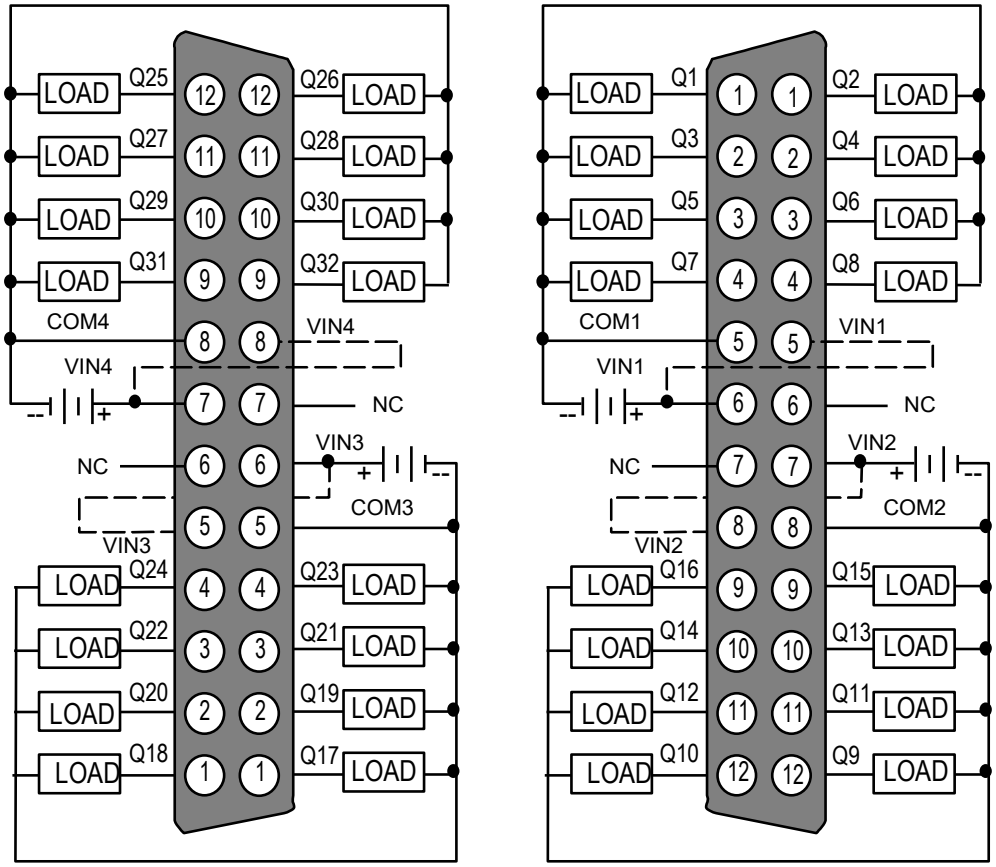

If the total current is greater than 3 Amps for a group, use both V_{IN} pins for the group by adding a second wire (shown by dashed lines above).

7.14 Output Module, 12/24 Vdc, 0.75 A Positive Logic, 32-Point with ESCP per Group: IC694MDL754

Figure 219: IC694MDL754

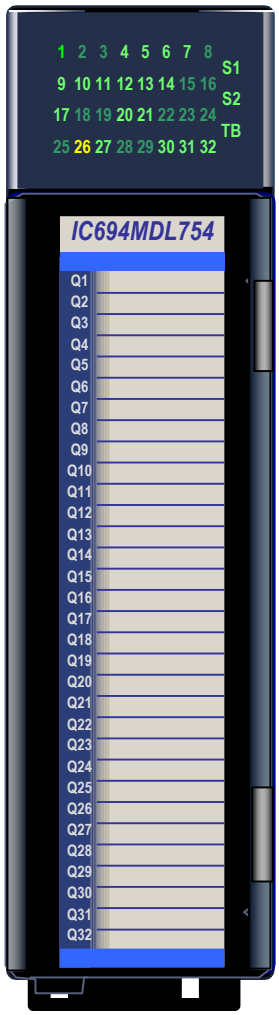

The ***12/24 Vdc, 0.75 A Positive Logic ESCP Output*** module, IC694MDL754, provides thirty-two discrete outputs in two isolated groups of 16. Each group has its own common. The outputs are positive logic or sourcing type outputs; they switch the loads on the positive side of the power supply, and supply current to the load. The outputs can switch user loads over the range of +12 Vdc to +24 Vdc (+20%, -15%) and can source a maximum current of 0.75 Amps per point.

Each point has electronic overcurrent/short circuit protection and generates an individual fault if either condition exists. In addition to output driver faults being sent back to the RX3i controller, Module provides a loss of field-side power fault, ESCP point failure within a group, field terminal block ON/OFF status and a DIP switch configuration mismatch fault.

Each group can be used to drive different loads. For example, one group might drive 24 Vdc loads, and the other could drive 12 Vdc loads. Power for the loads must be provided by the user.

A DIP switch at the rear of Module is used to select the outputs default mode: Force Off or Hold Last State. Module must be removed from the backplane to set this switch.

This module can be installed in any I/O slot in an RX3i system. Module supports insertion into and removal from an RX3i Universal Backplane which is under power. Refer to Section 2.6.4, *Hot Insertion and Removal*.

Module supports firmware upgrades using the WinLoader software utility (if the host CPU has a serial port) or using a Web-based tool (if the host CPU has no serial port). Instructions are included with the firmware upgrade kit.[25]

This module can be used with either a Box-style (IC694TBB032) or Spring-style (IC694TBS032) front Terminal Block (Refer to Chapter 17). The Terminal Block is ordered separately.

The blue bands on the label show that MDL754 is a low-voltage module.

Module cannot be used with a Series 90-30 PLC CPU.

7.14.2 Electronic Short-Circuit Protection (ESCP)

Each output point provides “self-recovering” protection against overcurrent, short circuit and over-temperature. The fault is present until the condition that caused the fault is removed or the faulted point is turned off. After the fault condition is removed the output driver automatically sets the output to the state it was in before the fault occurred.

Each output point provides transient voltage protection to clamp high voltages at or below 40 Vdc. Reverse voltage protection is provided for field power inputs.

7.14.3 LEDs: MDL754

Figure 220: LED Layout MDL754

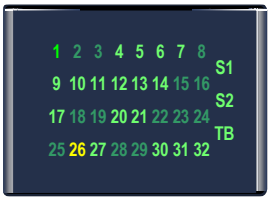

Outputs 1 – 16 Power Present
Outputs 17 – 32 Power Present
Terminal Block Present

Thirty-two green/yellow LEDs on Module indicate the ON/OFF status of points 1 through 32. These LEDs are green when the corresponding outputs are on, and yellow if the outputs are faulted. They are off when the corresponding outputs are off.

Two green/yellow LEDs indicate the presence of field power to each of the isolated output groups. They are green if field power is within limits. They are yellow if a point fault exists within their group. And they are off when field power is absent or outside operating limits.

The red/green Terminal Block LED is green when the removable terminal block of this module is locked in place. It is red when the terminal block is not locked. The Terminal Block LED blinks if there is a non-recoverable module fault. Module also sends an *Addition of Terminal Block* or *Loss of Terminal Block* message to the RX3i CPU to report the Terminal Block status.

7.14.4 Specifications: MDL754

MDL754	Specifications
Rated Voltage	12/24 Vdc, nominal
Output Voltage Range	10.2 to 30 Vdc
Outputs per Module	32 (two isolated groups of 16 outputs each)
Isolation: Field to Backplane (optical) and to Frame Ground Group to Group	 250 Vac continuous; 1500 Vac for 1 minute 250 Vac continuous; 1500 Vac for 1 minute
Output Current	0.75 A per point
Power Consumption	300 mA (maximum) from 5 Vdc bus on backplane;
Thermal Derating	No derating at 24 Vdc. At 30 Vdc, outputs are de-rated above 42 degrees C as displayed in Figure 221.
External Power Supply Rated Voltage External Power Supply Current Required (not including load current)	 +12 Vdc to +30 Vdc, 12/24 Vdc nominal Module does not provide isolation between external power and I/O points. Isolation can be achieved through the use of an isolated external power supply. Module version –CC and later: 72 mA/group with all outputs commanded Off, 132 mA/group with all outputs commanded ON. Module version –BC and earlier: 72 mA/group with all outputs commanded OFF, 100 mA/group with all outputs commanded ON.
Output Characteristics Inrush Current Output Voltage Drop Steady-state overcurrent trip Output Leakage Current On Response Time Off Response Time	 3 A supplied for 10 ms without ESCP trip 0.3 Vdc maximum 5 A typical per point 0.1 mA maximum 0.5 ms maximum 0.5 ms maximum
Protection	Short-circuit protection, overcurrent protection, over-temperature protection, all with auto-recovery.

For product standards and general specifications, refer to Appendix A: Product Certifications and Installation Guidelines for Conformance.

7.14.5 Thermal Derating: MDL754

Figure 221: Thermal Derating Curve MDL754

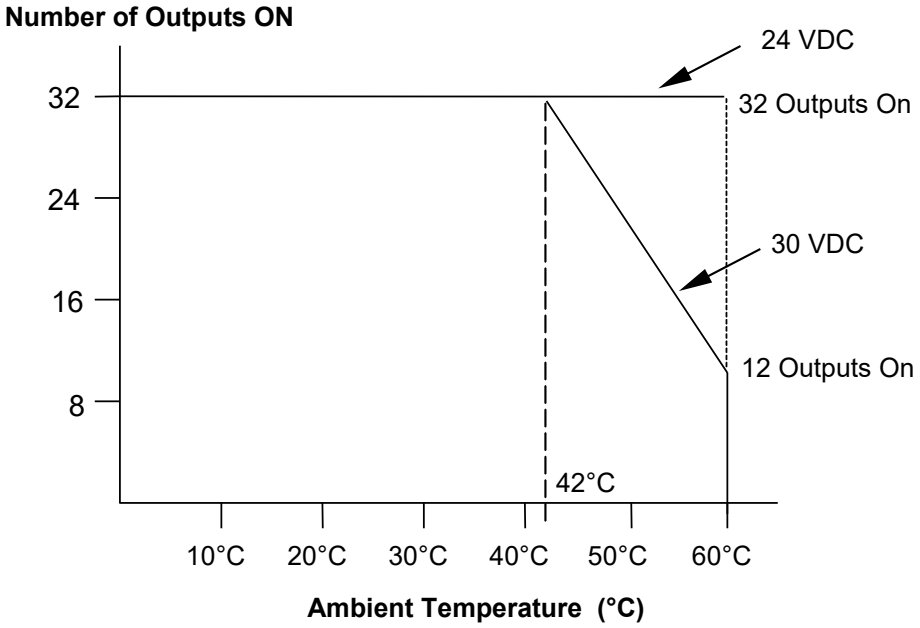

7.14.6 Output Defaults: MDL754

The DIP switch at the rear of Module selects the default operation for the output circuits of this module. Module must be removed from the backplane to set this switch. Note that there are two DIP switches on Module. Only the upper switch is used for module IC694MDL754.

Figure 222: DIP Switch Settings MDL754

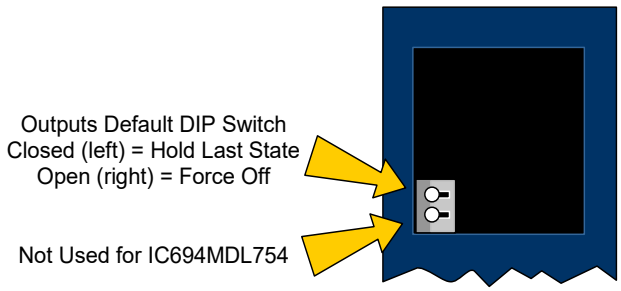

With the Outputs Default switch in the right (open) position, the outputs mode is set to Force Off. In this mode, the outputs will go to zero whenever communication with the CPU is lost. When the switch is in the left position, the Outputs Default mode is set to Hold Last State. In this mode, the outputs will retain their last programmed value whenever communication with the CPU is lost, and field power is present.

The Outputs Default selection made with the DIP switch must match the selection made for this feature in the software configuration of this module. If the two do not match, a *Module Outputs Default Mode Configuration Mismatch* fault occurs.

The following table summarizes the operation of Outputs Default mode with and without backplane power and field (external) power.

Backplane Power	Field Power	Outputs Default	Operation
On	On	Force Off or Hold Last State	Normal Operation. If module fault detected, outputs are set to zero.
On	Off	Force Off or Hold Last State	Module detects loss of field power, communicates fault to CPU while setting outputs to Off state. After field power is restored, the outputs are held in Off state until Module receives new output data from the CPU. Point LEDs indicate desired output without field power.
Off	On	Force Off	Module detects loss of communications and turns off the outputs within 400ms. LEDs are off.

		Hold Last State	Module detects loss of communications and holds outputs on their last states until the CPU sends new output data. LEDs are off

7.14.8 Field Wiring: MDL754

Connection	Terminal
Output 1	1
Output 2	2
Output 3	3
Output 4	4
Output 5	5
Output 6	6
Output 7	7
Output 8	8
Output 9	9
Output 10	10
Output 11	11
Output 12	12
Output 13	13
Output 14	14
Output 15	15
Output 16	16
DC+ for 1 - 16	17
DC- for 1 - 16	18

Figure 223: Field Wiring MDL754

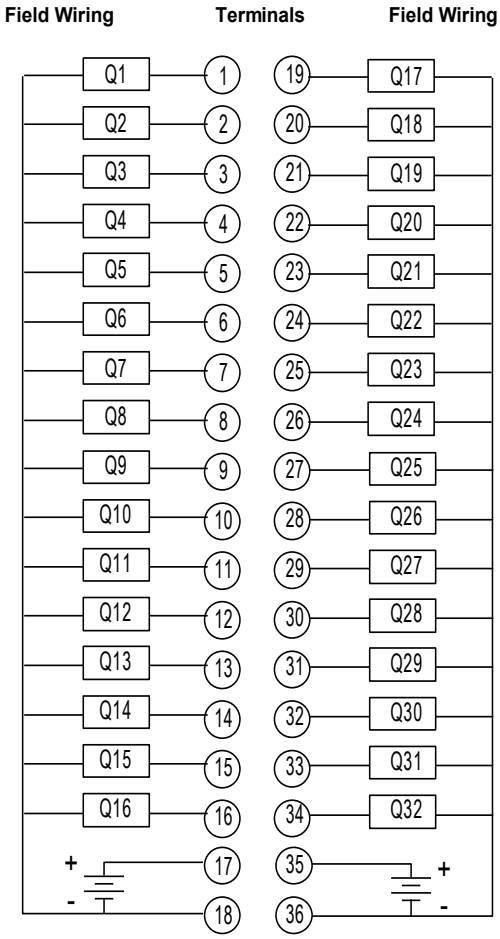

Terminal	Connection
19	Output 17
20	Output 18
21	Output 19
22	Output 20
23	Output 21
24	Output 22
25	Output 23
26	Output 24
27	Output 25
28	Output 26
29	Output 27
30	Output 28
31	Output 29
32	Output 30
33	Output 31
34	Output 32
35	DC+ for 17 - 32
36	DC- for 17 - 32

7.14.9 Module Status Data: MDL754

Module can optionally report sixteen bits of status data to the CPU. To access this data, the length must be changed from 0 to 16. It has the following content:

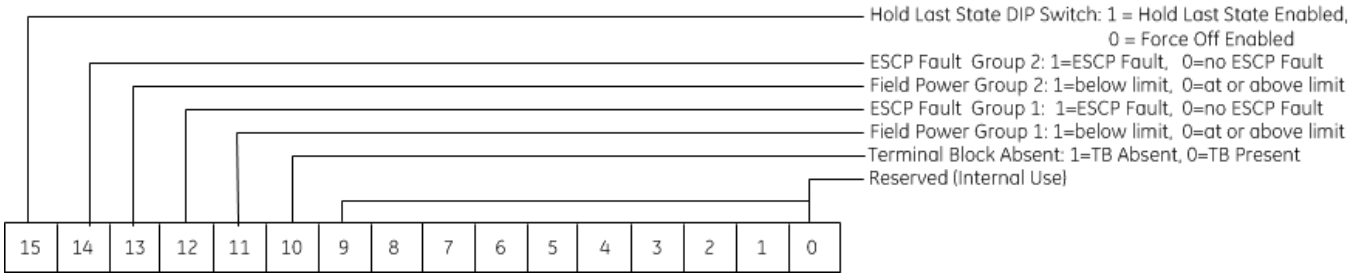

Status bit 15 indicates the state of the Output Default DIP switch of this module. Module configuration should be set to match the DIP switch, as discussed earlier in this section.

7.14.10 ESCP Status Data: MDL754

Module can optionally report the ESCP fault status of the outputs in input bits 0 - 31. By default, the length of this data area is 0. To access this data, the length must be changed from 0 to 32. The ESCP fault can be identified using the ESCP status bits:

Output ESCP Status Bits	
Output Group 1	Output Group 2
0 - 15	16 - 31

7.15 Output Module, 12/24 Vdc, 0.5 A Positive Logic, 32-Point with ESCP per Group: IC694MDL758

The ***12/24 Vdc, 0.5 A Positive Logic Output*** module with ESCP per group, IC694MDL758, provides thirty-two discrete outputs in two isolated groups of 16. Each group has its own common. The outputs are positive logic or sourcing-type outputs; they switch the loads on the positive side of the power supply, and supply current to the load. The outputs can switch user loads over the range of +12 to +24 Vdc (+20%, -15%) and can source a maximum current of 0.5 A per point.

Figure 224: IC694MDL758

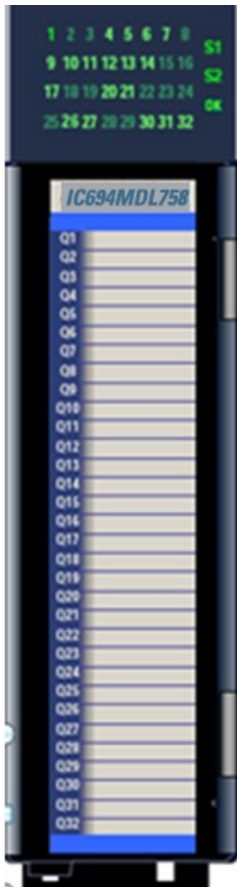

Each group has electronic short circuit protection and generates a fault if any output in the group is in a short circuit condition. Module provides an ESCP failure status within a group back to the RX3i controller. In addition to this, Module provides a fault on loss of field-side power within a group.

Each group can be used to drive different loads. For example, one group might drive 24 Vdc loads, and the other could drive 12 Vdc loads. Power for the loads must be provided by the user from an isolated source.

This module can be used with either a Box-style (IC694TBB032) or Spring-style (IC694TBS032) front Terminal Block (Refer to Chapter 17). The Terminal Block is ordered separately.

The blue bands on the label show that MDL758 is a low-voltage module.

This module can be installed in any I/O slot in an RX3i system.

Module supports insertion into and removal from an RX3i Universal Backplane which is under power. Refer to Section 2.6.4, *Hot Insertion and Removal*.

7.15.1 Electronic Short-Circuit Protection (ESCP)

Each output group provides “self-recovering” protection against short circuit. The fault is present until the condition that caused the fault is removed or the faulted group is turned off. After the fault condition is removed the output driver automatically sets the output to the state it was in before the fault occurred.

Each output point provides transient voltage protection to clamp high voltages at or below 40 Vdc.

7.15.2 LEDs: MDL758

Figure 225: LED Layout MDL758

Thirty-two green LEDs to show the status of the corresponding output channels

LED	Status	Description
Output Status (1-32)	GREEN	Output is ON
	OFF	Output is OFF

Two bi-color LEDs show the fault status of the two output channel groups:

- S1 corresponds to fault condition on channels 1-16;
- S2 corresponds to fault condition on channels 17-32.

LED	Status	Description
ESCP Status (S1-S2)	GREEN	Groupx Outputs are Normal
	RED	Groupx Outputs have ESCP fault

A single green LED shows the status of module power from backplane.

LED	Status	Description
Module Status (OK)	GREEN	Module power OK
	OFF	Module power not available

7.15.4 Specifications: MDL758

MDL758	Specifications
Rated Voltage	12 Vdc through 24 Vdc, positive logic
Output Voltage Range	10.2 to 28.8 Vdc
Outputs per Module	32 (two groups of sixteen outputs each)
Isolation Field to Backplane (optical) and to Frame Ground Group to Group	 250 Vac continuous; 1500 Vac for 1 minute 50 Vac continuous; 500 Vac for 1 minute
Output Current UL Approved Load Ratings	0.5 A per point with 8 A maximum per group without ESCP trip 0.5 A per point pilot duty 0.5 A per point resistive
Power Consumption	250 mA (maximum) from 5 Vdc bus on backplane 33 mA (maximum) per group from user-supplied isolated 24 Vdc with all sixteen outputs in group ON 20 mA (maximum) per group from user-supplied isolated 12 Vdc with all sixteen outputs in group ON
Output Characteristics Inrush Current On-state Voltage Drop Off-state Leakage Current On Response Time Off Response Time	 5.4 A for 10 ms without ESCP trip 0.3 Vdc 0.1 mA maximum 0.5 ms maximum 0.5 ms maximum
Installation Environment	Surrounding Air 60˚C maximum; For use in Pollution Degree 2 environments only

For product standards and general specifications, refer to Appendix A: Product Certifications and Installation Guidelines for Conformance.

7.15.5 Module Data: MDL758

Module MDL758 uses sixteen input bits and thirty-two output bits to exchange status and filter information with the RX3i CPU. The memory types and offsets for this data are selected in the hardware configuration for Module.

Input Data: MDL758

Module uses sixteen input bits to report its status information to the RX3i CPU. It has the following content:

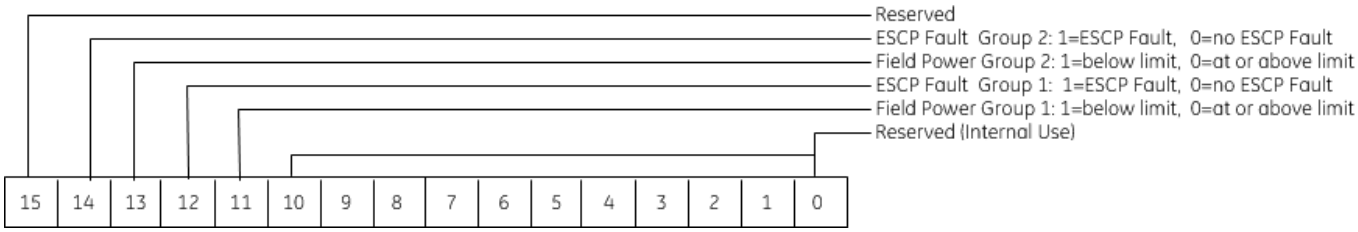

Output Data: MDL758

Module receives thirty-two bits of output data from the RX3i CPU, one bit per output point. Bit 0 determines the state of Output 1; bit 31 determines the state of Output 32.

7.15.6 Field Wiring: MDL758

Field wiring connections to Module are made via the interposing quick-connect (TBQC) terminal assembly (Refer to Chapter 17):

Connection	Terminal
Output 1	1
Output 2	2
Output 3	3
Output 4	4
Output 5	5
Output 6	6
Output 7	7
Output 8	8
Output 9	9
Output 10	10
Output 11	11
Output 12	12
Output 13	13
Output 14	14
Output 15	15
Output 16	16
DC+ for 1 - 16	17
DC- for 1 - 16	18

Figure 226: Field Wiring MDL758

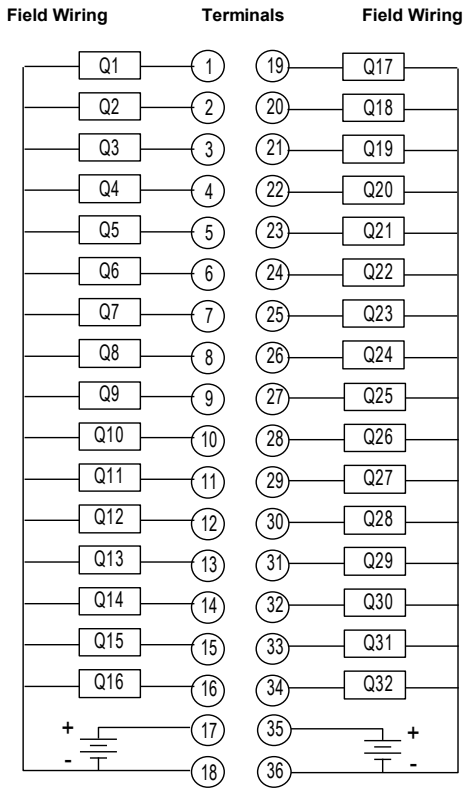

Terminal	Connection
19	Output 17
20	Output 18
21	Output 19
22	Output 20
23	Output 21
24	Output 22
25	Output 23
26	Output 24
27	Output 25
28	Output 26
29	Output 27
30	Output 28
31	Output 29
32	Output 30
33	Output 31
34	Output 32
35	DC+ for 17 - 32
36	DC- for 17 - 32

7.16 Output Module, 24/125 Vdc, 2 A Positive Logic, 16-Point with ESCP & Diagnostics: IC695MDL765

The ***24/125 Vdc 2 A Smart Digital Output*** module, IC695MDL765, provides sixteen discrete outputs in two isolated groups of 8 outputs. Each group of 8 outputs is referenced to an isolated common, providing group-to-group isolation. Module uses 24 Vdc or 125 Vdc.

Figure 227: IC695MDL765

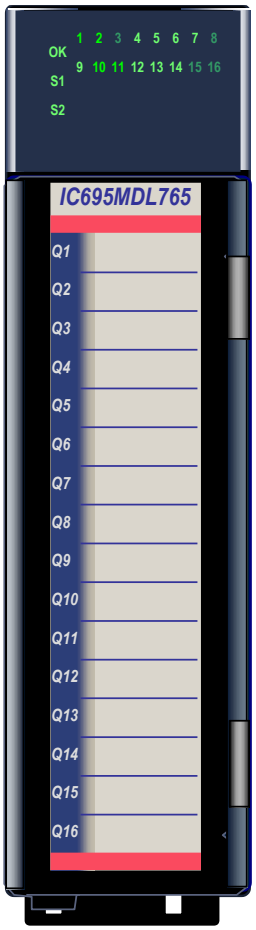

The outputs are positive logic or sourcing-type outputs; they switch the loads on the positive side of the power supply, and supply current to the load. The outputs can switch user loads over the ranges of +18 Vdc to +30 Vdc or 105 Vdc to 132 Vdc and can source a maximum current of 2 Amps per point.

Power for the loads must be provided by the user.

The field status LEDs (S1 and S2) indicate whether the external +24 Vdc or +125 Vdc power supply is present and above the minimum level, whether faults are present, and whether the terminal block is locked into place. Module also logs an *Addition of Terminal Block* or *Loss of Terminal Block* message to the I/O fault table to report the terminal block status.

Each point has electronic short circuit protection (ESCP) that shuts down an output and generates an individual fault if capacitive or incandescent surge current exceeds 10 A, or if it exceeds 2 A for more than 10 ms. In addition to output driver faults being sent back to the RX3i controller, Module provides a loss of field-side power fault, ESCP point failure within a group and field terminal block ON/OFF status.

Features of the Smart Digital Output module include:

- Output Pulse Test Capability
- Output Hold Last State or Default

Additional Diagnostics include:

- Over temperature
- Failed Switch Detection
- Overload Detection and Shutdown

- No-load Detection

This module can be used with either a Box-style (IC694TBB032) or Spring-style (IC694TBS032) front Terminal Block (Refer to Chapter 17). The Terminal Block is ordered separately.

The red bands on the label show that the MDL765 is a high-voltage module.

This module can be installed in any I/O slot in an RX3i system.

Module supports insertion into and removal from an RX3i Universal Backplane which is under power. Refer to Section 2.6.4, *Hot Insertion and Removal*.

Module supports firmware upgrades using the WinLoader software utility (if the host CPU has a serial port) or using a Web-based tool (if the host CPU has no serial port). Instructions are included with the firmware upgrade kit.[25]

7.16.1 Electronic Short-Circuit Protection (ESCP)

Each output point provides protection against overcurrent, short circuit and over-temperature. The fault is present until the condition that caused the fault is removed and the faulted point is turned off.

Each output point provides transient voltage protection to clamp high voltages at or below 136 Vdc.

7.16.2 LED Operation: MDL765

Figure 228: LED Layout MDL765

The 16 green/amber channel status LEDs on Module indicate the ON/OFF status of points 1 through 16.

Module OK LED indicates module status. The field status LEDs (S1 and S2) indicate whether the external +24 Vdc or +125 Vdc power supply is present and is above the minimum level, whether faults are present, and whether the terminal block is locked into place. Module also logs an *Addition of Terminal Block* or *Loss of Terminal Block* message to the I/O fault table to report the Terminal Block status.

LED Name	Function	LED Indications
OK	Module status	**Off:** Module is not receiving power from the RX3i backplane or Module has failed self-test.
		Solid green: Module OK and configured.
		Blinking green: Module has not received configuration from the CPU. If configuration is not successful, Module will continue to blink in this mode.
		Amber: Module hardware watchdog timeout.
		Blinking amber: Module internal error. Record the blink pattern and contact technical support.
1–16	Channel status	**Off:** Output is off
		Green: Output is on
		Amber: Output fault
S1, S2	Terminal block and field power status	**Off:** Terminal block present and field power not present
		Green: Terminal block and field power present
		Red: Terminal block not present or field power error. Field power errors include detecting 125 Vdc when configured for 24 Vdc or detecting only 24 Vdc when configured for 125 Vdc.

Note: The OK, S1 and S2 LEDs blink green in unison when Module is in firmware update mode.

7.16.3 Specifications: MDL765

MDL765	Specifications
Field Power Voltage (24V nominal I/O), V_{In}	18 to 30 Vdc
Field Power Voltage (125V nominal I/O), V_{In}	105 to 132 Vdc
Ripple Voltage, Field Power	10% Vpp
Outputs per Module	16 (two isolated groups of 8 outputs each)
Isolation Field to Backplane Continuous For 1 minute Group to Group Continuous For 1 minute Backplane Power Consumption +3.3 Vdc +5.1 Vdc	 250 Vac 1500 Vac 250 Vac 1500 Vac 152 mA 540 mA
Thermal De-rating	None required with output currents of 1 A per channel. For 2 A per channel, refer to Figure 223: Field Wiring MDL754.
Continuous Output Current per Point	Refer to *For product standards and* general specifications, refer to Appendix A: Product Certifications and Installation Guidelines for Conformance. Output Load Ratings: MDL765.
Output Characteristics Peak Inrush Current Output Leakage Current Group Output Current at 35ºC ambient Module Output Current at 35ºC ambient	 10 A supplied for 10 ms without ESCP trip 1 mA maximum 8 A maximum 16 A maximum
Sourcing Circuit Output On Voltage (I_{OUT} = 2A)	(V_{In}-2) to V_{In}
Minimum Load Current with no-load detection enabled	50 mA
On Response Time	1 ms maximum
Off Response Time	1 ms maximum
Maximum Switching Frequency	Refer to *For product standards and* general specifications, refer to Appendix A: Product Certifications and Installation Guidelines for Conformance. Output Load Ratings: MDL765 below.
Protection	Short-circuit protection, overcurrent protection, and over-temperature protection. Over-temperature, short-circuit, and overcurrent faults must be recovered by turning the point off and back on.

For product standards and general specifications, refer to Appendix A: Product Certifications and Installation Guidelines for Conformance.

Output Load Ratings: MDL765

Subject	Description
Resistive	2 A at 132 Vdc 2 A at 30 Vdc No external suppression components required.
Inductive (Pilot Duty)	0.6 A at 132 Vdc For inductive loads greater than 2.2 H, maximum switching frequency is 0.125 Hz. Overall maximum switching frequency: 1 Hz No external suppression components required.
	1.2 A at 30 Vdc For inductive loads greater than 0.8 H, maximum switching frequency is 0.5 Hz. Overall maximum switching frequency: 1 Hz No external suppression components required.
Incandescent (Lamp)	0.75 A at 132 Vdc 0.75 A at 30 Vdc No external suppression components required.

Thermal Derating: MDL765

With output currents of 1 A per channel, no temperature de-rating is required, and all channels can operate within the entire Surrounding Air temperature range. With output currents of 2 A per channel, the number of active channels must be reduced as temperature increases, according to the following de-rating curve.

Figure 229: Thermal Derating Curve MDL765

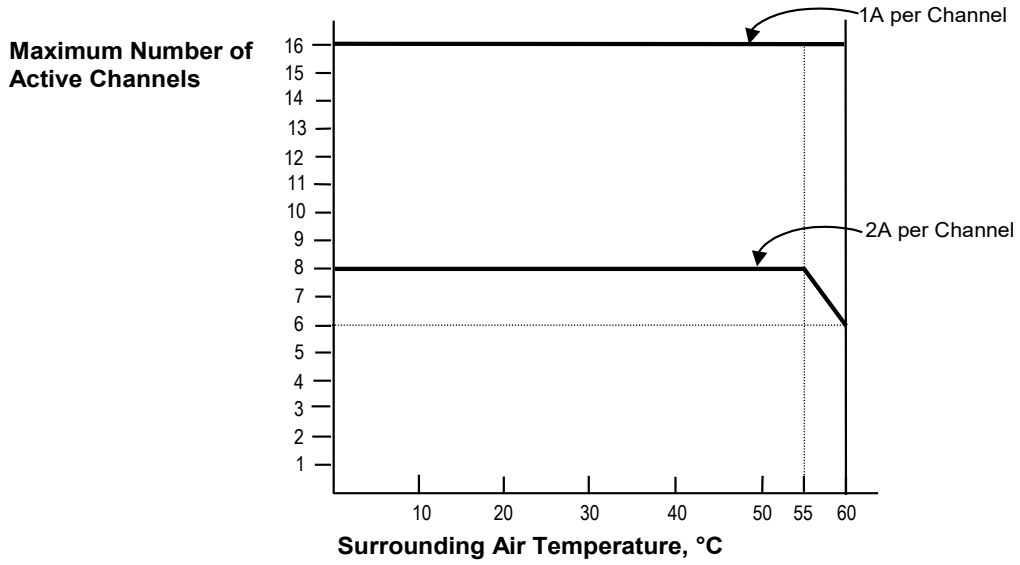

7.16.5 Field Wiring: MDL765

Field wiring connections to Module are made to the interposing quick-connect (TBQC) terminal assembly, as described in Chapter 17.

Connection	Terminal
Output 1	1
NC	2
Output 2	3
NC	4
Output 3	5
NC	6
Output 4	7
NC	8
Output 5	9
NC	10
Output 6	11
NC	12
Output 7	13
NC	14
Output 8	15
NC	16
DC+	17
DC-	18

Figure 230: Field Wiring MDL765

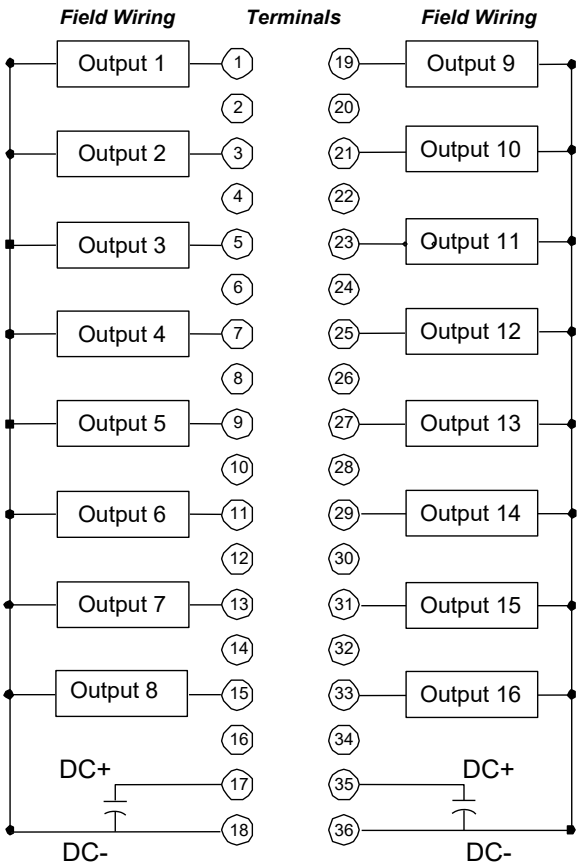

Terminal	Connection
19	Output 9
20	NC
21	Output 10
22	NC
23	Output 11
24	NC
25	Output 12
26	NC
27	Output 13
28	NC
29	Output 14
30	NC
31	Output 15
32	NC
33	Output 16
34	NC
35	DC+
36	DC-

7.16.6 Circuit Operation: MDL765

The two eight-circuit DC sourcing circuit groups have all output devices connected to the negative side of the power supply (DC-). The sourcing circuit outputs provide power to the output devices. For sourcing circuit outputs, an ON condition is logic 1 and an OFF condition is logic 0.

Figure 231: Circuit Detail MDL765

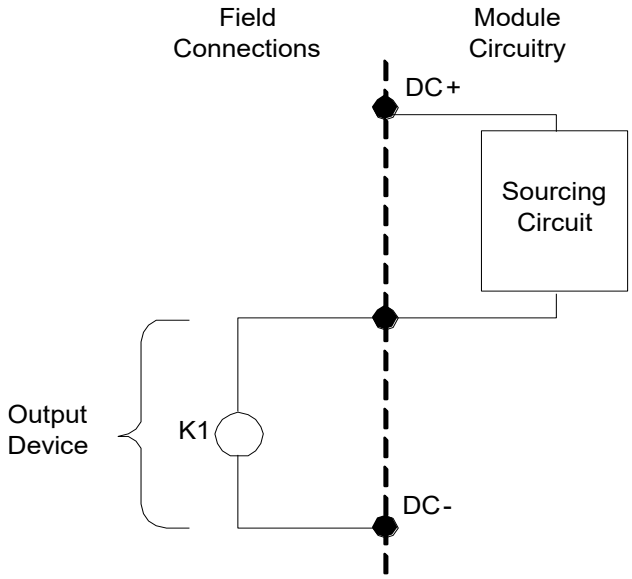

7.16.7 Input and Output Data Formats: MDL765

Output Value Data: MDL765

The application uses these bits (one bit per output), beginning at the configured *Outputs Reference Address* to write the commanded output values to Module.

Output Command Value Feedback Data: MDL765

Module uses these bits (one bit per output), beginning at the configured *Output Command Reference Address* to report the output feedback data values.

Channel Diagnostic and Status Data: MDL765

Module can be configured to report channel diagnostic and status data to the CPU. The CPU stores this data at the *Diagnostic Reference Address* configured for this module. Use of this feature is optional.
The data for each channel occupies two words whether the channel is used or not.

Note: At least two sweeps must occur to clear the diagnostic bits: one scan to send the %Q data to Module and one scan to return the %I data to the CPU. Because module processing is asynchronous to the controller sweep, more than two sweeps may be needed to clear the bits, depending on the sweep rate and the point at which the data is made available to Module.

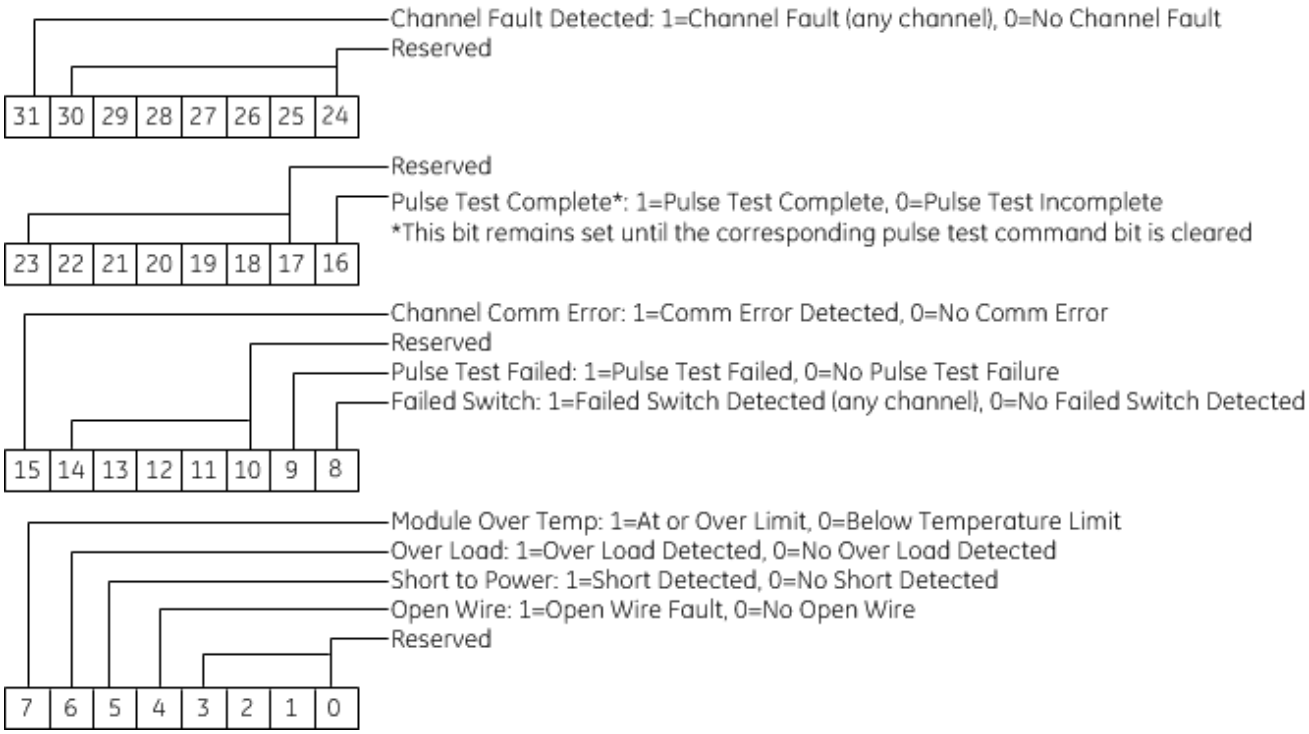
Channel Fault Detected: 1=Channel Fault (any channel), 0=No Channel Fault
Reserved
31 30 29 28 27 26 25 24
Reserved
Pulse Test Complete*: 1=Pulse Test Complete, 0=Pulse Test Incomplete
*This bit remains set until the corresponding pulse test command bit is cleared
23 22 21 20 19 18 17 16
Channel Comm Error: 1=Comm Error Detected, 0=No Comm Error
Reserved
Pulse Test Failed: 1=Pulse Test Failed, 0=No Pulse Test Failure
Failed Switch: 1=Failed Switch Detected (any channel), 0=No Failed Switch Detected
15 14 13 12 11 10 9 8
Module Over Temp: 1=At or Over Limit, 0=Below Temperature Limit
Over Load: 1=Over Load Detected, 0=No Over Load Detected
Short to Power: 1=Short Detected, 0=No Short Detected
Open Wire: 1=Open Wire Fault, 0=No Open Wire
Reserved
7 6 5 4 3 2 1 0

Module Status Data: MDL765

Module can be configured to return two words of module status data to the CPU. The CPU stores this data in the 32-bit *Module Status* reference area configured for this module.

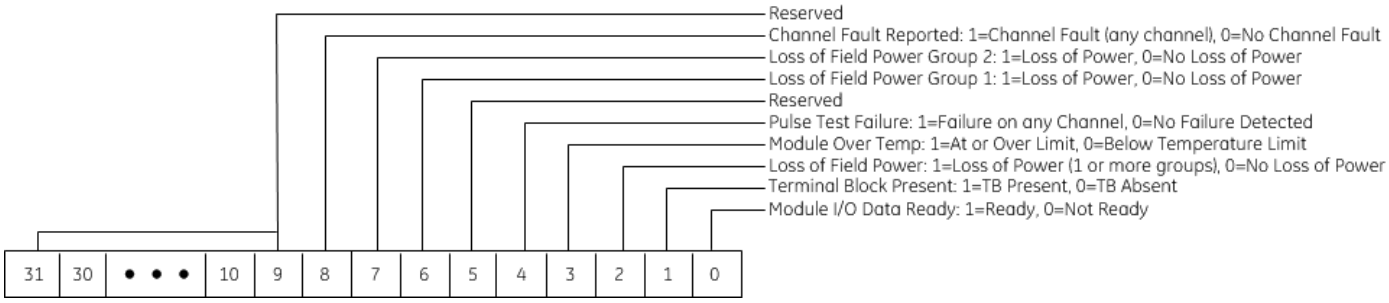

Pulse Test Command Output Data: MDL765

Module uses these bits (one bit per output), beginning at the configured *Pulse Command Output Reference Address* to command an on-demand pulse test. To command an on-demand pulse test, the Pulse Test Enable parameter for the channel must be set to *Enabled – Manual*.

7.16.8 Diagnostics: MDL765

Module always performs its standard diagnostic checks, plus one optional output diagnostic. Module returns current circuit diagnostics to %I bits for all circuits.

For Over-temperature, Short Circuit, Failed Switch and Overload, the user must de-assert the output %Q bit to clear the error. The corresponding %I bit will be turned off within at least two CPU sweeps.

Over Temperature Diagnostics: MDL765

Each circuit has a built-in thermal sensor. If the internal temperature exceeds the allowable limit Module logs an OVER-TEMPERATURE fault in the I/O fault table and turns off the circuit to protect its internal electronics. The temperature must decrease below the allowable limit before the output can turn on again. This diagnostic is always performed for all the outputs.

Short Circuit Diagnostics: MDL765

Output circuits are protected by a short circuit threshold sensor at the switching device. If the instantaneous current on an output exceeds 10 amps, Module turns the output off within microseconds. Module will try to restart the load; if two additional attempts are unsuccessful, the output circuit is forced off, and Module logs a SHORT CIRCUIT fault in the I/O fault table. To restore normal operation to output the cause of the current surge must be removed, then the diagnostic must be cleared from the CPU.

This diagnostic detects shorts across the load only. Also, systems with floating power supplies do not detect shorts of I/O points to ground because there is no return current path. Systems with power supplies grounded on the negative side detect grounded output points as Short Circuit.

Partial (high resistance) shorts may not draw enough current to be detected by the Pulse Test.

Failed Switch Diagnostics: MDL765

Module automatically monitors all circuits for several types of faults, which may be reported as Failed Switch diagnostics.

Failed Switch is reported if the switch state is not the same as the commanded state of the circuit. Module logs a FAILED SWITCH fault in the I/O fault table identifying the failed circuit. The logic state of the circuit is set to OFF.

When an output fault occurs, the actual condition of the output switch is not known. If the output switch has failed shorted (or closed), current flow is not interrupted when Module forces the output state OFF. Action external to Module must be taken to remedy the problem. The FAILED SWITCH fault can alert personnel or cause program logic to be activated, possibly shutting off power to Module, I/O section, or process.

No Load Diagnostics: MDL765

Reporting for this diagnostic can be enabled or disabled for individual outputs.

By default, outputs are configured to report No-Load conditions. In this configuration, energizing the output activates a no-load current level. If the load does not continuously draw 50mA from the output circuit, Module logs a NO LOAD fault in the I/O fault table. This diagnostic should be not be used for circuits on which very small loads (small relays or indicating lamps) will draw less than 50 mA. To clear the No-Load error, a load of at least 85 mA must be applied to the output.

Overload Diagnostic: MDL765

In addition to the protection provided by the built-in Short Circuit detection, Overload Shutdown provides further protection for output loads, field wiring, and switching devices connected to this module. If a load exceeds 2 A DC continuously for 10 ms, Module turns the output off and logs an OVERLOAD fault in the I/O fault table.

Under-Voltage Detection: MDL765

The field power supply on each group includes support for detecting supply voltages below the minimum voltage for the selected voltage standard. The fault can be disabled by group. Detecting the fault has no impact on the state of the output control.

Output Pulse Test: MDL765

The Output Pulse Test is an optional diagnostic feature that exercises the output points to confirm they can be switched to a known state.

The pulse test attempts to switch the output from its Normal State to its Default State. For a load with a Normal State of ON, the source output is pulsed OFF. For a load with a Normal State of OFF, the source output is pulsed on. A fault is logged in the I/O fault table if a failure is detected in the output point.

Pulse Testing should remain enabled if Module has loads that hold one state for long periods of time, *unless any load(s) are sensitive to pulses or interruptions of up to 16 ms*. It should be disabled if the loads experienced by this module will normally change state as the program

executes. These will report faults during normal operation, and do not need to be pulsed.

Pulse Test Selections:	Pulse test frequency Output Default State / Output Normal State

On Demand Pulse Test: MDL765

To use this feature, the Pulse Test Enable parameter for the channel must be set to *Enabled-Manual.* To command a pulse test, set the Pulse Test Command bit for the channel(s) to be pulse tested.

Module performs one or more pulse tests for each channel selected. Since this will take many sweeps, you should keep the Pulse Test Command bit set until the Pulse Test Complete bit is set for that channel in the Channel Diagnostic and Status Data.

Module keeps the Pulse Test Complete bit set as long as the Pulse Test Command bit is set. If the pulse test fails, the Pulse Test Failed bit is set at the same time as the Pulse Test Complete bit. One output scan with the Pulse Test Command bit cleared clears the Pulse Test Complete status bit and Pulse Test Failure diagnostic bit.

Automatic Pulse Test: MDL765

To use this feature, set the Pulse Test Enable parameter for the channel to *Enabled-Auto.* The Output Pulse Test occurs at a frequency selected in the Hardware Configuration, with no intervention from the CPU. The pulse test execution is based on the Time of Day clock set in the CPU, and the frequency is relative to 12:00 AM. For example, a frequency of 12 hours will result in a pulse test run at 12:00 AM and 12:00 PM.

If the pulse test fails, the Pulse Test Failed bit is set.

7.16.9 Configuration: MDL765

Module Settings: MDL765

Parameter	Function
Outputs Reference Address Outputs Value Reference Length	Specifies the memory location used by Module for 16 bits of output data.
Output Command Feedback Reference Address	Specifies the starting address where Module returns 16 bits of feedback output data.
Output Command Feedback Reference Length	Provides 1 bit per channel of feedback output data. Setting this value to 0 disables feedback data reporting.
Diagnostic Reference Address	Specifies the starting address for reporting channel diagnostics data.
Diagnostic Reference Length	Provides thirty-two bits of diagnostic data per channel. Setting this value to 0 disables channel diagnostics reporting.
Module Status Reference Address	Specifies the starting address for reporting module status data.
Module Status Reference Length	Provides thirty-two bits of module status data. Setting this value to 0 disables channel diagnostics reporting.
Pulse Test Command Output Reference Address/ Pulse Test Command Output Reference Length	Specifies the memory location for 16 bits of manual pulse test command data.
Channel Faults w/o Terminal Block	Enables or disables generation of channel faults and alarms after a Terminal Block has been removed.
Loss of Terminal Block Detection	Enables or disables logging of a fault to indicate a Terminal Block has been removed.
Loss of Field Power Group 1 Detection/ Loss of Field Power Group 2 Detection	Enables or disables loss of field power detection for the specified group.
Voltage Selection	Specifies field power voltage level for under-voltage detection. Can be enabled or disabled by the Loss of Field Power Group 1/Group 2 Detection parameter.
Inputs Default	Specifies whether inputs will go to Force Off or Hold Last State if Module loses communication with the CPU. An output goes to its power-up default state when Module is first powered up.
I/O Scan Set	Assigns Module I/O status data to a scan set defined in the CPU configuration. Determines how often the RX3i polls the data.

Channel Settings: MDL765

Parameter	Function
Outputs Default Mode	Force Off, Force On, or Hold Last State Outputs are forced into this state when the CPU is placed into Outputs Disabled. This includes immediately after download of Hardware Configuration. Outputs remain in the Outputs Default state indefinitely or until one of the following occurs: CPU is placed into Outputs Enabled. Communications with the CPU are restored. Power is removed from Module.
Pulse Test Enable	Enables or disables pulse testing of the output. Allows you to select Manual or Automatic pulse testing. For details about this feature, refer to *Output Pulse Test: MDL765* above.
Pulse Test Frequency	If Pulse Test Enable is set to Auto, allows you to select the frequency of pulse testing.
Pulse Test Normal State	Available when Pulse Test is enabled. Specifies the state in which this output point will spend the majority of its time. Module performs a pulse test only from the normal state to the default state.
Pulse Test Default State	Available when Pulse Test Enable is enabled. Specifies the state the point will go to if a channel failure occurs. When the output is placed into the default state Module will not perform a pulse test into the normal state.
Diagnostic Reporting Enable	Enables or disables channel diagnostics. If enabled, channel diagnostic data is written to the Channel Diagnostic and Status Data.
Open Load Reporting Enable	If enabled, an open load (no-load) condition is reported in the Channel Diagnostic and Status Data.
Pulse Test Failed Enable	If enabled, the results of manual or automatic pulse testing are reported in the Channel Diagnostic and Status Data.
Over Load Reporting Enable	Always enabled: An output overload condition is reported in the Channel Diagnostic and Status Data.
Fault Reporting Enable	If enabled, channel faults are reported to the I/O fault table.
Open Load Reporting Enable	If enabled and the corresponding diagnostic reporting is enabled, an open load (no-load) condition is reported in the I/O fault table.
Pulse Test Failed Enable	If enabled and the corresponding diagnostic reporting is enabled, a failed pulse test is reported in the I/O fault table.
Over Load Reporting Enable	Always enabled: An output overload condition is reported in the I/O fault table.

7.17 Output Module, Isolated Relay, N.O., 4 A, 16-Point: IC694MDL916

Figure 232: IC694MDL916

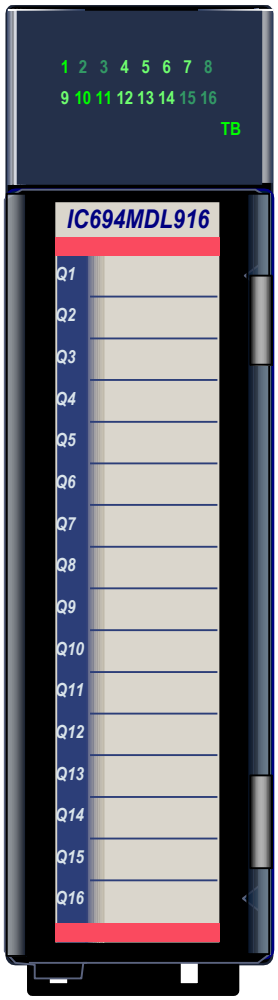

The ***4 A 16-Point Relay Output*** module IC694MDL916 provides sixteen Form A relays for controlling output loads. The maximum output switching capacity of each circuit is 4 Amps. Each output point is isolated from the other points, and each point has a separate common power output terminal. Outputs provide a high degree of noise immunity, minimizing the need to add external snubbers. The relay outputs can control a wide range of output devices, such as: motor starters, solenoids, and indicators.

The user must supply the AC or DC power to operate the field devices.

Module supports insertion into and removal from an RX3i Universal Backplane which is under power. Refer to Section 2.6.4, *Hot Insertion and Removal*.

The red bands on the door card show that MDL916 is a high-voltage module.

A DIP switch at the rear of Module is used to select the default mode for the outputs: Force Off or Hold Last State. Module must be removed from the backplane to set this switch.

Module cannot be used with a Series 90-30 PLC CPU.

Individually numbered LEDs indicate the ON/OFF state of each output. The red/green TB LED is green when the removable terminal block of this module is locked in place. It is red when the terminal block is not locked.

Module MDL916 can be used with a Box-style (IC694TBB032), Extended Box-style (IC694TBB132), Spring-style (IC694TBS032), or Extended Spring-style (IC694TBS132) Terminal Block (Refer to Chapter 17). Extended terminal blocks provide the extra shroud depth typically needed for shielded wires. Terminal Blocks are ordered separately.

Module reports *Addition of Terminal Block*, *Loss of Terminal Block*, and *Hold Last State Configuration Mismatch* messages to the RX3i CPU.

7.17.1 Specifications: MDL916

MDL916	Specifications
Outputs per Module	16 isolated Form A relay outputs
External Power Supply	0 – 125 Vdc (5/24/125 Vdc nominal) 0 – 250 Vac (47 to 63 Hz), 120-240 Vac nominal
Isolation Field to Backplane and to Frame Ground, Group to Group Power Consumption	 250 Vac continuous; 1500 Vac for 1 minute. 300 mA at 5 Vdc from backplane maximum (all outputs ON) 150 mA at 24 Vdc from backplane relay power (all outputs ON)
Thermal Derating	Refer to below.
Output Characteristics	
Output Voltage[27]	5 – 125 Vdc (5/24/125 Vdc nominal) 5 – 250 Vac (47 to 63 Hz), 120-240 Vac nominal
Output Current	10 mA per point minimum 4 A for 5-250 Vac maximum (resistive or general-purpose) 4 A for 5-30 Vdc maximum (resistive) 2 A pilot duty per output (5 to 30 Vdc, 5 to 240 Vac)
Output Voltage Drop	0.3 Vdc maximum
Output Leakage Current	Not Applicable (open contact)
Response Times (On/Off)	10 ms maximum (At nominal voltage excluding contact bounce)
Switching Frequency	20 cycles per minute maximum
Protection	None. External snubbers may be applied if necessary
Relay Contact Life	Refer to Load Current Limitations: MDL916 below
Diagnostic Information	Field-side terminal block presence detection reported to CPU (RX3i only)

For product standards and general specifications, refer to Appendix A: Product Certifications and Installation Guidelines for Conformance.

[27] *When this module is used with DC power supply IC695PSD040 or PSD140, special precautions should be taken because dropouts in the source voltage will be seen by this module and may cause relay dropouts.*

Thermal Derating: MDL916

The following table shows the number of outputs that can be on at the same time under the maximum load of 4 A per point.

Figure 233: Thermal Derating Curve MDL916

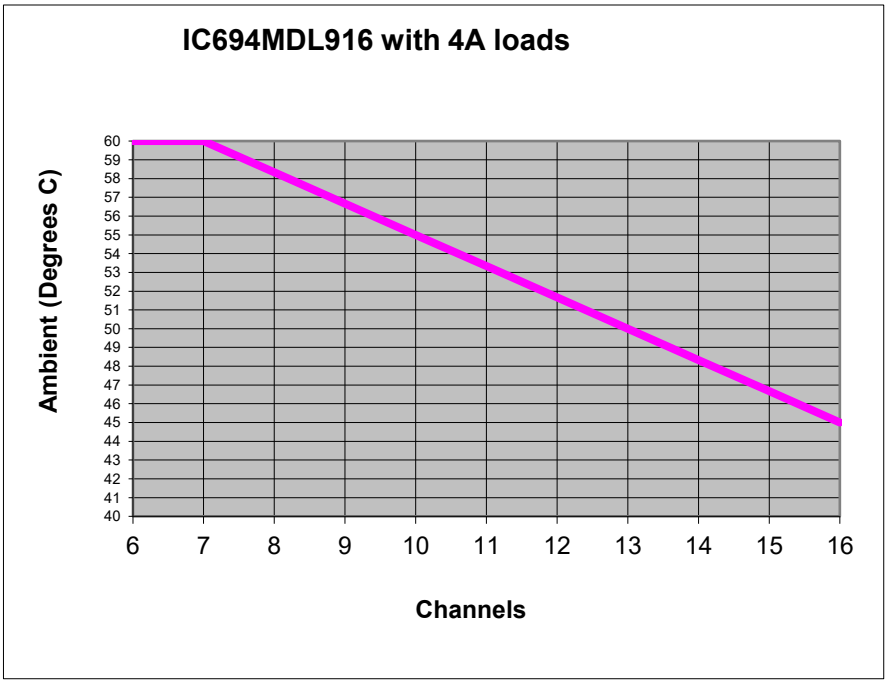

Load Current Limitations: MDL916

Operating Voltage	Maximum Current for Load Type		Typical Contact Life (Number of Operations)
	Resistive	Lamp or Solenoid[28]	
5 to 240 Vac	4 A	2 A	200,000
5 to 240 Vac	0.1	0.05 A	1,000,000
5 to 240 Vac	1 A	0.5 A	700,000
5 to 24 Vdc	–	3 A	100,000
5 to 24 Vdc	4 A	2 A	200,000
5 to 24 Vdc	1 A	0.5 A	700,000
5 to 24 Vdc	0.1 A	0.05 A	1,000,000

[28] *Assumes a 7ms L/R time constant (DC inductive load) or Cos φ ≥ 0.4 (AC inductive load).*

Suppression Circuits: MDL916

Relay contact life, when switching inductive loads, will approach resistive load contact life if suppression circuits are used. Examples of typical suppression circuits for AC and DC loads are displayed in the following figure. The 1 A, 200 V diode shown in the DC load typical suppression example is an industry-standard 1N4935. The resistor and capacitor shown for AC load suppression are standard components, available from most electronics distributors.

Figure 234: Suppression of DC Loads MDL916

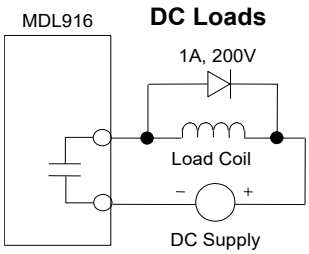

Figure 235: Suppression of AC Loads MDL916

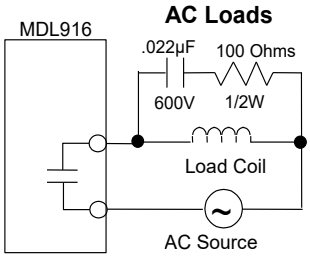

Setting the Output Defaults: MDL916

The DIP switch at the rear of Module determines how the outputs will operate if the CPU is set to Stop Mode or loses communications with Module. The Outputs Default Mode selection made with the DIP switch must match the selection made for this feature in the software configuration of this module. If the two do not match, a warning message is displayed in the fault table.

Module must be removed from the backplane to set this switch. Note that there are two DIP switches on Module. Only the upper switch is used.

With the Outputs Default Mode switch in the right (open) position, the outputs will turn off whenever communication with the CPU is lost.

When the switch is in the left position, the outputs will hold their last programmed value whenever communication with the CPU is lost. Backplane power must be present to Hold Last State. Otherwise, Module will default outputs regardless of the DIP switch setting.

Figure 236: DIP Switch Settings MDL916

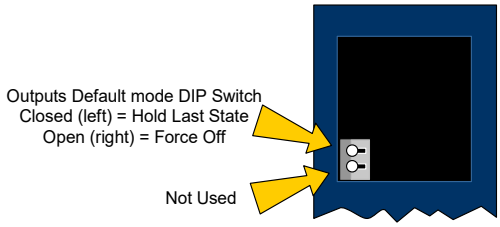
Outputs Default mode DIP Switch
Closed (left) = Hold Last State
Open (right) = Force Off
Not Used

Module Status Data: MDL916

Module can optionally use 16 input bits to report its status information to the RX3i CPU. To access this data, the length must be changed from 0 to 16. Module status data has the following content:

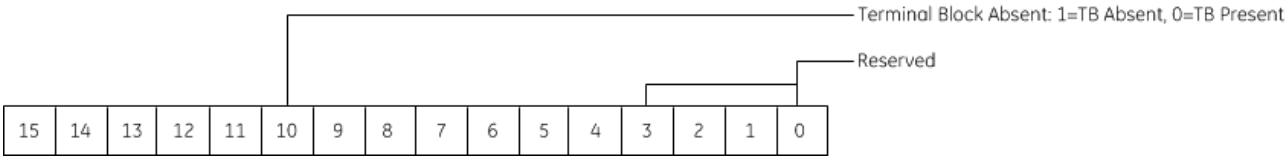

7.17.2 Field Wiring: MDL916

Connection	Terminal	Terminal	Connection
Output 1, Normally-Open	1	19	Output 9, Normally-Open
Output 1 Return	2	20	Output 9 Return
Output 2, Normally-Open	3	21	Output 10, Normally-Open
Output 2 Return	4	22	Output 10 Return
Output 3, Normally-Open	5	23	Output 11, Normally-Open
Output 3 Return	6	24	Output 11 Return
Output 4, Normally-Open	7	25	Output 12, Normally-Open
Output 4 Return	8	26	Output 12 Return
Output 5, Normally-Open	9	27	Output 13, Normally-Open
Output 5 Return	10	28	Output 13 Return
Output 6, Normally-Open	11	29	Output 14, Normally-Open
Output 6 Return	12	30	Output 14 Return
No Connection	13	31	No Connection
Output 7, Normally-Open	14	32	Output 15, Normally-Open
Output 7 Return	15	33	Output 15 Return
No Connection	16	34	No Connection
Output 8, Normally-Open	17	35	Output 16, Normally-Open
Output 8 Return	18	36	Output 16 Return

Figure 237: Typical Relay Output Circuit MDL916

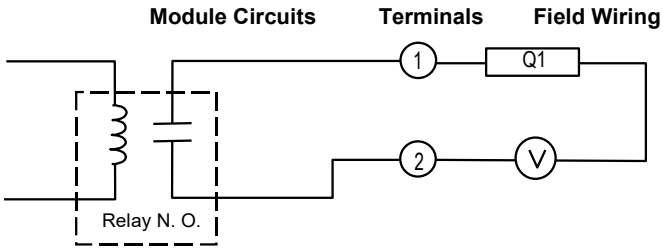

7.18 Output Module, Isolated Relay, N.O., 4 A, 8-Point: IC694MDL930

Figure 238: IC694MDL930

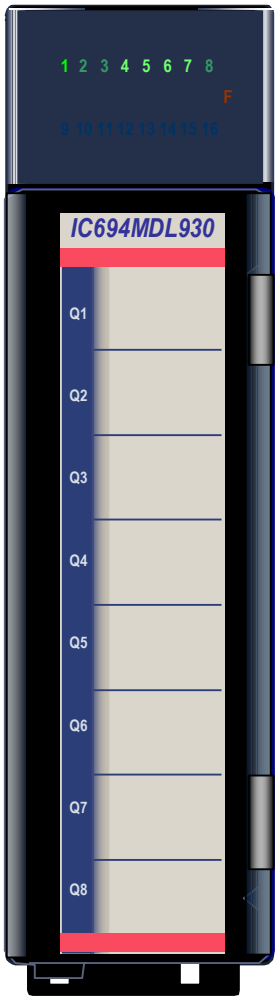

The ***4 A Isolated Relay Output*** module, IC694MDL930, provides eight normally–open relay circuits for controlling output loads. The output switching capacity of each circuit is 4 A. Each output point is isolated from the other points, and each point has a separate common power output terminal. The relay outputs can control a wide range of output devices, such as: motor starters, solenoids, and indicators.

The user must supply the AC or DC power to operate the field devices connected to this module.

Individual numbered LEDs show the ON/OFF status of each output point. There are no fuses on this module. The red bands on the label show that MDL930 is a high-voltage module.

This module can be installed in any I/O slot in an RX3i system.

Module does not support insertion into or removal from an RX3i Universal Backplane which is under power (see *Hot Insertion and Removal Not Supported*).

7.18.1 Specifications: MDL930

MDL930	Specifications
Rated Voltage	24 Vdc, 120/240 Vac (nominal - refer to the following table for exceptions)
Operating Voltage	5 to 30 Vdc 5 to 250 Vac, 50/60 Hz
Outputs per Module	8 isolated outputs
Isolation: Field to Backplane and to Frame Ground	250 Vac continuous; 1500 Vac for 1 minute
Point to Point	250 Vac continuous; 1500 Vac for 1 minute
Maximum Load	4 A resistive maximum per output 2 A pilot duty per output 20 A maximum per module for UL installations Maximum Load depends on the ambient temperature as displayed in Figure 239
Minimum Load	10 mA
Maximum Inrush	5 A
On Response Time[29]	15 ms maximum
Off Response Time[29]	15 ms maximum
Power Consumption	6 mA (all outputs on) from 5 Vdc bus on backplane 70 mA (all outputs on) from relay 24 Vdc bus on backplane

For product standards and general specifications, refer to Appendix A: Product Certifications and Installation Guidelines for Conformance.

Thermal Derating: MDL930

Figure 239: Thermal Derating Curve MDL930

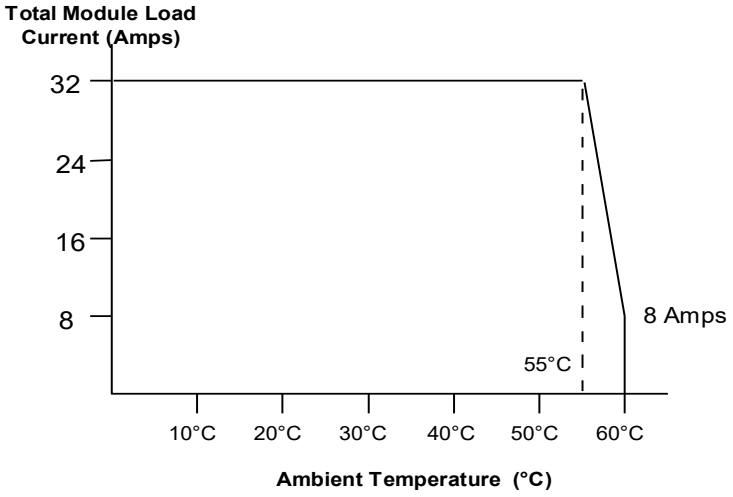

[29] *When this module is used with DC power supply IC695PSD040 or PSD140, special precautions should be taken because dropouts in the source voltage will be seen by this module and may cause relay dropouts.*

Load Current Limitations: MDL930

Operating Voltage	Maximum Current for Load Type		Typical Contact Life (Number of Operations)
	Resistive	Lamp or Solenoid[30]	
24 to 120 Vac	4 A	2 A	150,000
24 to 120 Vac	1 A	0.5 A	500,000
24 to 120 Vac	0.1 A	0.05 A	1,000,000
240 Vac	4 A	2 A	50,000
240 Vac	0.1 A	0.05 A	500,000
240 Vac	1 A	0.5 A	200,000
24 Vdc	–	3 A	50,000
24 Vdc	4 A	2 A	100,000
24 Vdc	1 A	0.5 A	500,000
24 Vdc	0.1 A	0.05 A	1,000,000
125 Vdc	0.2 A	0.1 A	300,000

Relay contact life, when switching inductive loads, will approach resistive load contact life if suppression circuits are used. Examples of typical suppression circuits for AC and DC loads are displayed in the following figure. The 1 A, 200 V diode shown in the DC load typical suppression example is an industry-standard 1N4935. The resistor and capacitor shown for AC load suppression are standard components, available from most electronics distributors.

Load Suppression Examples for Output Module MDL930

Figure 240: Suppression of DC Loads MDL930

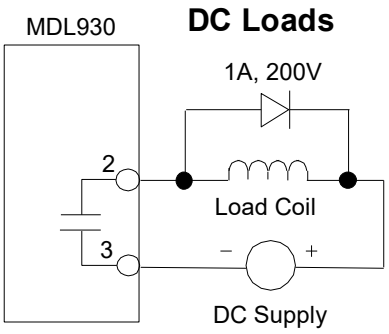

Figure 241: Suppression of AC Loads MDL930

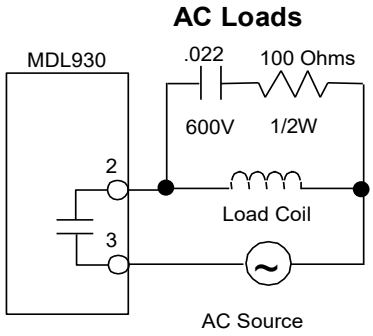

[30] *Assumes a 7ms time constant*

7.18.2 Field Wiring: MDL930

Terminal	Connection
1	No connection
2	Output 1-1
3	Output 1-2
4	Output 2-1
5	Output 2-2
6	Output 3-1
7	Output 3-2
8	Output 4-1
9	Output 4-2
10	No connection
11	No connection
12	Output 5-1
13	Output 5-2
14	Output 6-1
15	Output 6-2
16	Output 7-1
17	Output 7-2
18	Output 8-1
19	Output 8-2
20	No connection

Figure 242: Field Wiring MDL930

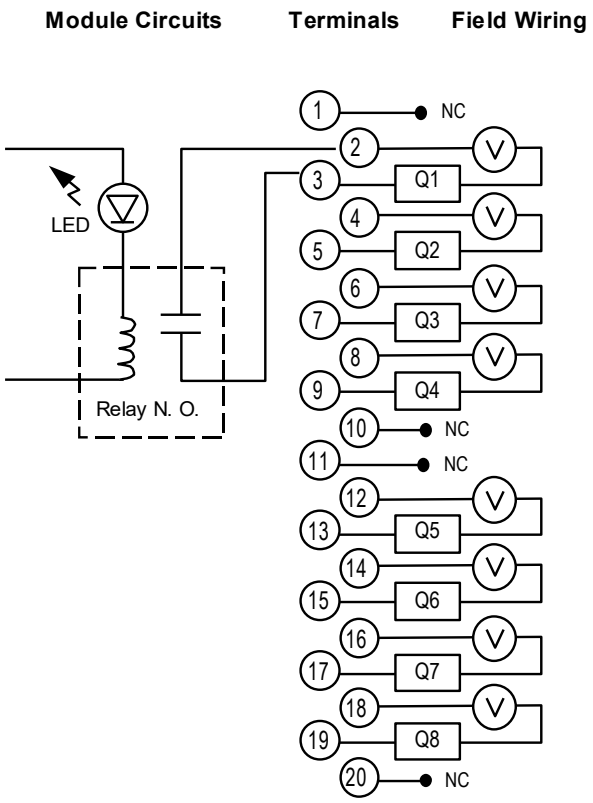

7.19 Output Module, Isolated Relay, N.C. and Form C, 8 A, 8-Point: IC694MDL931

Figure 243: IC694MDL931

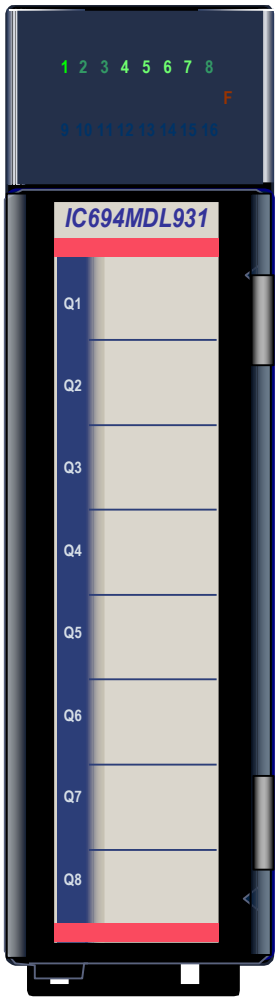

The ***8 A Isolated Relay Output*** module, IC694MDL931, provides four normally-closed and four Form C relay circuits for controlling output loads provided by the user. The output switching capacity of each circuit is 8 A. Each output relay is isolated from the other relays, and each relay has a separate common power output terminal. The relay outputs can control a wide range of load devices, such as: motor starters, solenoids, and indicators.

The user must supply the AC or DC power to operate the field devices.

Individual numbered LEDs show the ON/OFF status of each output point. There are no fuses on this module. The red bands on the label show that MDL931 is a high-voltage module.

This module can be installed in any I/O slot in an RX3i system.

Module does not support insertion into or removal from an RX3i Universal Backplane which is under power (see *Hot Insertion and Removal Not Supported*).

7.19.1 Specifications: MDL931

MDL931	Specifications
Rated Voltage	24 Vdc, 120/240 Vac, 50/60 Hz (nominal - refer to the following table for exceptions)
Output Voltage Range	5 to 30 Vdc 5 to 250 Vac, 50/60 Hz
Outputs per Module	8 isolated outputs
Isolation: Field to Backplane and to Frame Ground Point to Point	 250 Vac continuous; 1500 Vac for 1 minute 250 Vac continuous; 1500 Vac for 1 minute
Maximum Load	8 A resistive maximum per output 20 A maximum per module for UL installations Maximum load depends on ambient temperature as shown.
Minimum Load	10 mA
Inrush Current	8 A maximum for one cycle
On Response Time[31]	15 ms maximum
Off Response Time[31]	15 ms maximum
Output Leakage Current	1 mA maximum at 250 Vac, (25°C (77°F))
Power Consumption	6 mA (all outputs on) from 5 Vdc bus on backplane 110 mA (all outputs on) from relay 24 V bus on backplane

For product standards and general specifications, refer to Appendix A: Product Certifications and Installation Guidelines for Conformance.

Thermal Derating: MDL931

Figure 244: Thermal Derating Curve MDL931

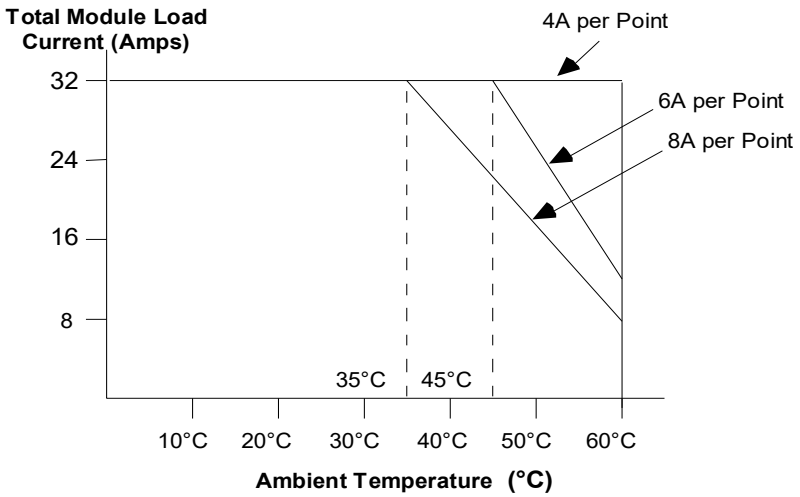

[31] *When this module is used with DC power supply IC695PSD040 or PSD140, special precautions should be taken because dropouts in the source voltage will be seen by this module and may cause relay dropouts.*

Load Current Limitations: MDL931

Operating Voltage	Maximum Current for Load Type		Typical Contact Life (Number of operations)
	Resistive	Lamp or Solenoid[32]	
5 to 120 Vac	8 A	3 A	200,000
	6 A	2.5 A	300,000
	4 A	1.5 A	400,000
	1 A	0.5 A	1,100,000
240 Vac	8 A	3 A	100,000
	6 A	2.5 A	150,000
	4 A	1.5 A	200,000
	1 A	0.5 A	800,000
24 Vdc	8 A	3 A	100,000
	6 A	2.5 A	150,000
	4 A	1.5 A	200,000
	1 A	0.5 A	800,000
48 Vdc	1.5 A	–	100,000
100 Vdc	0.5 A	–	100,000
125 Vdc	0.38 A	0.12 A	100,000
150 Vdc	0.30 A	0.10 A	100,000

Relay contact life, when switching inductive loads, will approach resistive load contact life if suppression circuits are used. The examples below show typical suppression circuits for AC and DC loads. The 1 A, 200 V diode shown in the DC load typical suppression circuit is an industry-standard 1N4935. The resistor and capacitor shown for AC load suppression are standard components.

Load Suppression Examples for Output Module IC694MDL931

Figure 245: Suppression of DC Loads MDL931

Figure 246: Suppression of AC Loads MDL931

[32] *For inductive loads*

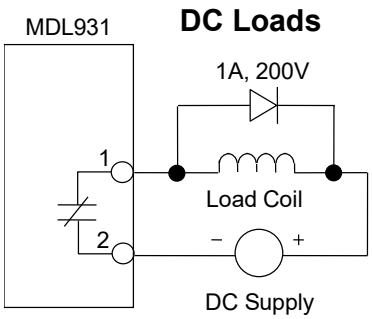
DC Loads
MDL931
1A, 200V
1
2
Load Coil
−
+
DC Supply

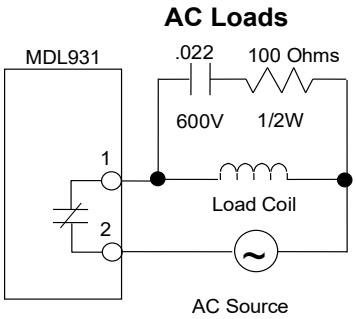
AC Loads
MDL931
.022
100 Ohms
600V
1/2W
1
2
Load Coil
AC Source

7.19.2 Field Wiring: MDL931

Terminal	Connection
1	Output 1
2	Output 1 return
3	Output 2
4	Output 2 return
5	Output 3
6	Output 3 return
7	Output 4
8	Output 4 return
9	Output 5 (if normally-closed relay)
10	Output 5 return
11	Output 5 (if normally-open relay)
12	Output 6 (if normally-closed relay)
13	Output 6 return
14	Output 6 (if normally-open relay)
15	Output 7 (if normally-closed relay)
16	Output 7 return
17	Output 7 (if normally-open relay)
18	Output 8 (if normally-closed relay)
19	Output 8 return
20	Output 8 (if normally-open relay)

Figure 247: Field Wiring MDL931

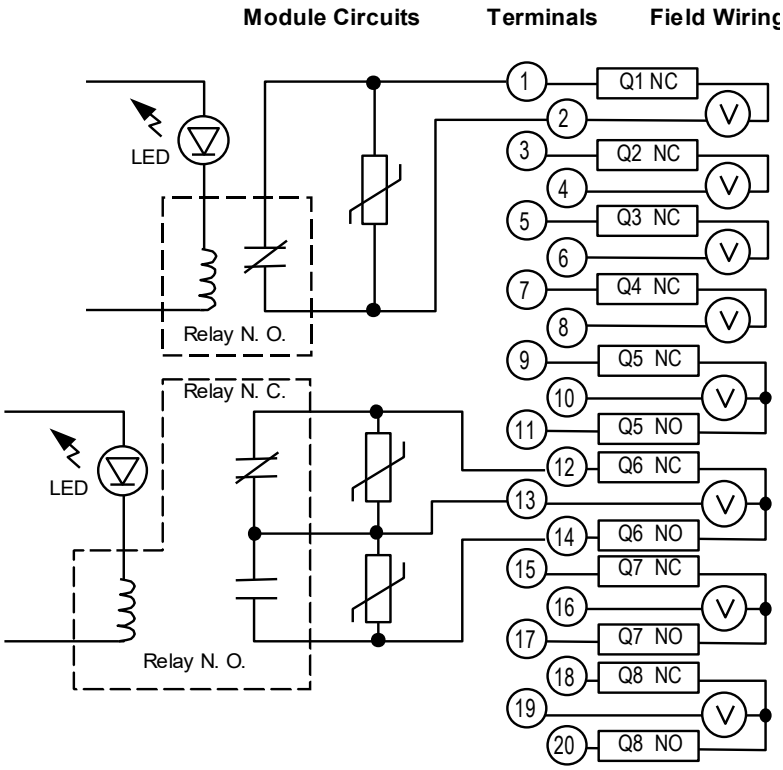

7.20 Output Module, Relay Output, N.O., 2 A, 16-Point: IC694MDL940

Figure 248: IC694MDL940

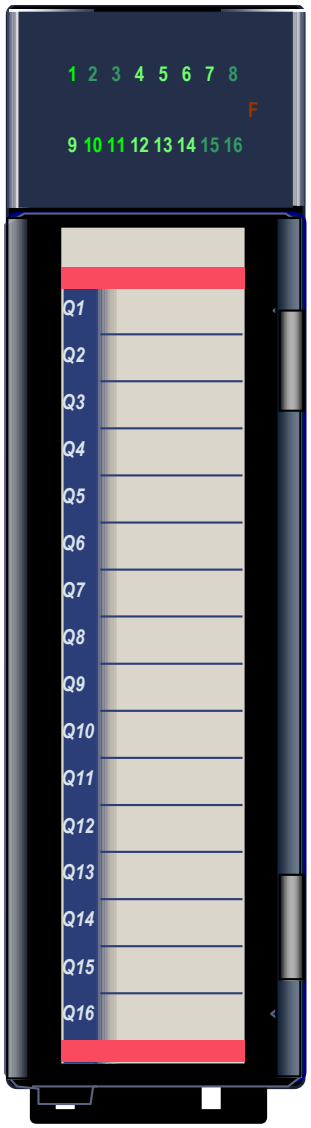

The ***2 A Relay Output*** module, IC694MDL940, provides sixteen normally-open relay circuits for controlling output loads. The output switching capacity of each output is 2 A. The output points are in four groups of four points each. Each group has a common power output terminal. The relay outputs can control a wide range of load devices, such as: motor starters, solenoids, and indicators. Power for the internal relay circuits is provided by the +24 Vdc bus on the backplane.

The user must supply the AC or DC power to operate field devices.

Individual numbered LEDs show the ON/OFF status of each output point. There are no fuses on this module. The red bands on the label show that MDL940 is a high-voltage module.

This module can be installed in any I/O slot in an RX3i system.

Module does not support insertion into or removal from an RX3i Universal Backplane which is under power (see Hot Insertion and Removal Not Supported).

7.20.1 Specifications: MDL940

MDL940	Specifications
Rated Voltage	24 Vdc, 120/240 Vac (nominal - refer to the following table for exceptions)
Operating Voltage	5 to 30 Vdc 5 to 250 Vac, 50/60 Hz
Outputs per Module	16 (four groups of four outputs each)
Isolation: Field to Backplane and to Frame Ground Point to Point	 250 Vac continuous; 1500 Vac for 1 minute 250 Vac continuous; 1500 Vac for 1 minute
Maximum Load	2 A pilot duty maximum per output 4 A maximum per common
Minimum Load	10 mA
Maximum Inrush	5 A
On Response Time[33]	15 ms maximum
Off Response Time[33]	15 ms maximum
Power Consumption, all outputs on	7 mA from 5 Vdc bus on backplane 135 mA from relay 24 V bus on backplane

For product standards and general specifications, refer to Appendix A:.

[33] *When this module is used with DC power supply IC695PSD040 or PSD140, special precautions should be taken because dropouts in the source voltage will be seen by this module and may cause relay dropouts.*

Load Current Limitations: MDL940

Operating Voltage	Maximum Current for Load Type		Typical Contact Life (Number of Operations)
	Resistive	Lamp or Solenoid[34]	
24 to 120 Vac	2 A	1 A	300,000
24 to 120 Vac	1 A	0.5 A	500,000
24 to 120 Vac	0.1 A	0.05 A	1,000,000
240 Vac	2 A	1 A	150,000
240 Vac	1 A	0.5 A	200,000
240 Vac	0.1 A	0.05 A	500,000
24 Vdc	–	2 A	100,000
24 Vdc	2 A	1 A	300,000
24 Vdc	1 A	0.5 A	500,000
24 Vdc	0.1 A	0.05 A	1,000,000
125 Vdc	0.2 A	0.1 A	300,000

Relay contact life, when switching inductive loads, will approach resistive load contact life if suppression circuits are used. The following figures are examples of typical suppression circuits for AC and DC loads. The 1A, 200 V diode shown in the DC load suppression circuit is an industry-standard 1N4935. The resistor and capacitor shown for AC load suppression are standard components.

Load Suppression Examples for Output Module MDL940

Figure 249: Suppression of DC Loads MDL940

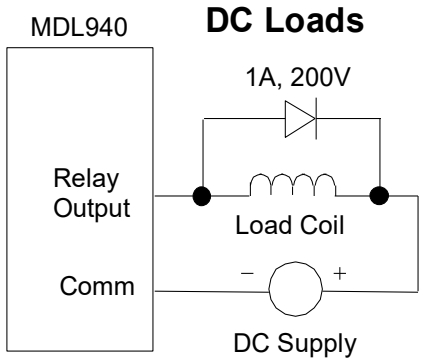

Figure 250: Suppression of AC Loads MDL940

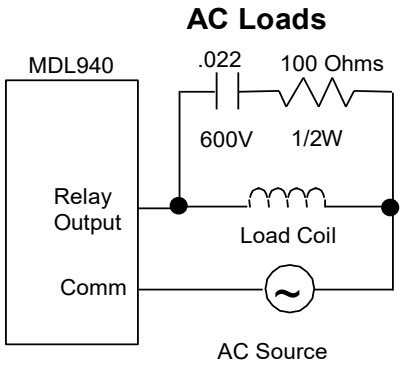

[34] *Assumes a 7 ms time constant*

7.20.3 Field Wiring: MDL940

Terminal	Connection
1	Outputs 1 – 4 common (return)
2	Output 1
3	Output 2
4	Output 3
5	Output 4
6	Outputs 5 -8 common (return)
7	Output 5
8	Output 6
9	Output 7
10	Output 8
11	Outputs 9 - 12 common (return)
12	Output 9
13	Output 10
14	Output 11
15	Output 12
16	Outputs 13 – 16 common (return)
17	Output 13
18	Output 14
19	Output 15
20	Output 16

Figure 251: Field Wiring MDL940

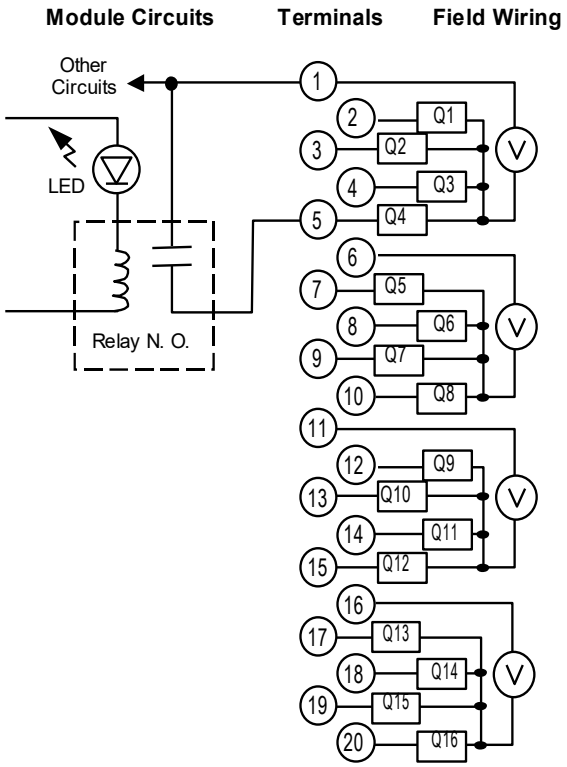

Section 8: Discrete Mixed I/O Modules

This chapter describes the following discrete mixed input/output module for RX3i PACSystems:

Discrete Mixed I/O Module Description	Catalog Number	Section
High-Speed Counter Module 80 kHz 12-Input 4-Output	IC694APU300	8.1
Serial I/O Processor Module	IC694APU305	8.2
High-Speed Counter Module 1.5 MHz 8-Input 7-Output	IC695HSC304	8.3
High-Speed Counter Module 1.5 MHz 16-Input 14-Output	IC695HSC308	8.3
Mixed I/O 24 Vdc Input (8 points) N.O. Relay Output (8 points)	IC694MDR390	8.4

8.1 High-Speed Counter Module: IC694APU300

Figure 252: IC694APU300

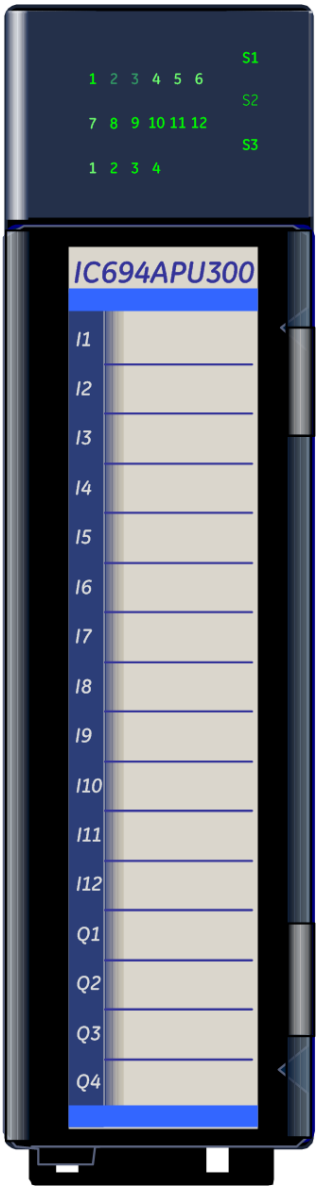

Two versions of the APU300 exist: Enhanced version IC694APU300-CA and later (Figure 252) and Classic version IC694APU300-BA and earlier. All classic features are supported by the enhanced version. Refer to *High-Speed Counter Modules for PACSystems RX3i and Series 90-30 User's Manual,* GFK-0293D or later, for complete specifications and to Chapter 6 of that manual for enhanced features.

The High-Speed Counter module, IC694APU300, provides direct processing of rapid pulse signals up to 1 MHz (Enhanced), 80 kHz (Classic). Module senses inputs, processes the input count information, and instantaneously controls the outputs per each counter's configuration without needing to communicate with a CPU.

The High-Speed Counter uses 16 bits of discrete input memory (%I), 15 words of analog input memory (%AI), and 16 bits of discrete output memory (%Q) in the CPU.

The High-Speed Counter can be configured to have:

- 4 identical, independent simple counters
- 2 identical, independent more complex counters
- 1 complex counter
- 2 simple counters with Clock Z input (Enhanced version only)

Additional module features include:

- 12 positive logic (source) inputs with input voltage range selection of either 5 Vdc or 10 to 30 Vdc
- 4 positive logic (source) outputs
- Enhanced version supports both Differential and Single-Ended Encoders. Classic version supports Single-Ended only.
- Counts per timebase register for each counter
- Internal module diagnostics
- A removable terminal board for field wiring
- LEDs to indicate the state of each input, each output and three status LEDs (enhanced version only). Classic version has two LEDs.

Inputs can be used as count signals, direction, disable, edge-sensitive strobe, and preload inputs depending on the counter type selected by the user. Outputs can be used to drive indicating lights, solenoids, relays, and other devices.

The blue bands on the label indicate that the APU300 is a low-voltage module. This module can be installed in any I/O slot in an RX3i system.

Power for Module is drawn from the backplane 5 Vdc bus. Power sources for input and output devices must be supplied by the user or by the +24 Vdc Isolated output of the power supply. Module also provides a selectable threshold voltage to allow the inputs to respond to either 5 Vdc signal levels or 10 to 30 Vdc signal levels.

IC694APU300 Revision CA & later supports insertion into and removal from an RX3i Universal Backplane which is under power. Refer to Section 2.6.4, *Hot Insertion and Removal*. Revision -BA and earlier do not.

Module supports firmware upgrades using the WinLoader software utility (if the host CPU has a serial port) or using a Web-based tool (if the host CPU has no serial port). Instructions are included with the firmware upgrade kit.[25]

8.1.1 Counter Types: APU300

A counter type must be selected when Module is configured. In Enhanced mode, whenever differential encoders are used, the number of available counters will be reduced (refer to *High-Speed Counter Modules for PACSystems RX3i and Series 90-30 User's Manual,* GFK-0293, Sections 7-8). The number of counters listed below applies to single-ended applications. The choices are:

- Type A – selects four identical, independent simple counters.
- Type B – selects two identical, independent more complex counters.
- Type C – selects one complex counter.
- Type Z – selects two simple counters with Clock Z input (enhanced mode only).

Type A Configuration: APU300

When used in this basic configuration, Module has four identical programmable up or down counters. Enhanced supports 32-bit or 16-bit counters; Classic supports 16-bit counters only. Each counter:

- Can be programmed to count either up or down.
- Has three inputs: a Preload input, a Count Pulse input, and a Strobe input.
- Has one output, with programmable on and off Output Presets.

Type B Configuration: APU300

In this configuration, Module has two identical bidirectional 32-bit counters.

- The count inputs can be configured to accept Up/Down, Pulse/Direction, or A Quad B signals.
- Each counter has two completely independent sets of Strobe inputs and Strobe registers.
- Each counter has two outputs; each output has programmable on/off Presets.
- Each counter has one Disable input that can be used to suspend counting.

Type C Configuration: APU300

The Type C configuration is suitable for applications requiring motion control, differential counting, or homing capability.

In this configuration, Module has one 32-bit counter with four outputs.

- Each output has programmable on/off output presets, three strobe registers with strobe inputs, and two Preload values with Preload inputs.
- Two sets of bidirectional counter inputs can be connected to operate in a differential fashion. Each set of inputs can be configured for A Quad B, Up/Down, or Pulse/Direction operation.
- Module has a Home Position register for preloading the Accumulator to the Home Position value.

Type Z Configuration (Enhanced Mode): APU300

Type Z is a simple counter that uses a pair of clock inputs to perform Up/Down. Pulse/Direction, or A Quad B Counting. A special Clock Z input combines the functions of a Strobe input (copies the current count value to a Strobe register), Disable input (optionally suspends counting), and Clear input (optionally resets the Accumulator to zero). Each Type Z counter has four set-point values that can be used to control its outputs. The Type Z counter has multiple modes of operation which may be selected by the user. Refer to *High-Speed Counter Modules for PACSystems RX3i and Series 90-30 User's Manual,* GFK-0293, Sections 6 & 7 for a full description of the Type Z counter and enhanced mode configuration.

8.1.3 Status LEDs: APU300

Enhanced Version: APU300

Module Status LEDs

LED	Status	Description
S1 (MODULE OK)	Green	The High-Speed Counter is powered up and has completed its internal diagnostics.
	Red	The watchdog timer circuit has detected a module failure.
	Off	Module is not powered up correctly or internal diagnostics failed.
S2 (CONFIG)	On	A user configuration has been downloaded to Module.
	Off	A configuration has not been downloaded; the default configuration is in effect.
S3 (FIELD POWER)	On	Output field power present
	Off	Output field power not present

Input Status LEDs

A status LED is provided for each of the twelve input points.

LED	Status	Description
1 -12	On	Input is on
	Off	Input is off

Output Status LEDs

A status LED is provided for each of the four output points.

LED	Status	Description
1-4	Green	Output is on
	Amber	Output has overcurrent fault
	Off	Output is off

Classic Version: APU300

LED	Status	Description
MODULE OK	Green	The High-Speed Counter is powered up and has completed its internal diagnostics.
	Off	Module is not powered up correctly or internal diagnostics failed.
CONFIG	On	A user configuration has been downloaded to Module.
	Off	A configuration has not been downloaded; the default configuration is in effect.

8.1.4 Specifications: APU300

	IC694APU300 Classic		IC694APU300 Enhanced	
General				
Power Consumption	250 mA (1.25 W) from backplane 5 Vdc bus		250 mA (1.25 W) from backplane 5 Vdc bus	
Output Points	Powered by user-supplied 5 Vdc, or 10 - 30 Vdc		Powered by user-supplied 4.7 Vdc - 40 Vdc	
Maximum Count Rate	80 kHz		1 MHz (duty cycle 25% to 87%)	
LEDs	BOARD OK and CONFIG OK		BOARD OK (S1), CONFIG OK (S2), Field Power OK (S3), Input Status, Output Status	
Isolation				
Field to Backplane (optical) and to frame ground	250 Vac continuous, 1500 Vac for one minute		250 Vac continuous, 1500 Vac for one minute	
Group to Group	250 Vac continuous, 1500 Vac for one minute		250 Vac continuous, 1500 Vac for one minute	
Inputs				
Voltage Range	5 Vdc (TSEL jumpered to INCOM) 10 to 30 Vdc (TSEL open)		5 Vdc (TSEL jumpered to INCOM) 10 to 30 Vdc (TSEL open)	
Number of Positive Logic Inputs	12 (Single Ended)		12 (Single Ended) or 6 (Differential)	
Input Thresholds (I1 to I12)	5 Vdc Range	10–30 Vdc Range	5 Vdc Range	10–30 Vdc Range
Von	3.55 V min.	8.35 V min.	3.55 V min.	8.35 V min.
Ion	3.2 mA min.	3.2 mA min.	3.2 mA min.	3.2 mA min.
Voff	1.5 V max.	2.4 V max.	1.5 V max.	2.4 V max.
Ioff	0.8 mA max.	0.8 mA max.	0.8 mA max.	0.8 mA max.
Survivable Peak Voltage	± 500 V for 1µSec		± 500 V for 1µSec	
Transient Common Mode Noise Rejection	1000 V/µSec minimum		1000 V/µSec minimum	
Input Impedance	Refer to Figure 253 for V-I characteristics			
Outputs				
Voltage Range	10 to 30 Vdc at 500 mA maximum 4.75 to 6 Vdc at 20 mA maximum		4.7 to 40 Vdc at 1.5 A maximum	
Off State Leakage Current	10µA maximum per point		10 µA maximum per point	
Output Voltage Drop	0.5 V maximum at 500 mA		0.5 V maximum at 500 mA 1.5 V maximum at 1.5 A	
Inrush current	–		1.6 A without ESCP tripping	
CMOS Load Drive Capability	Yes		Yes	
Positive Logic Outputs	Four		Four	
Output Protection	Outputs are short circuit protected by a 3 A pico fuse common to all four outputs		Outputs are protected for overcurrent (ESCP) with self-healing capability.	
Reverse Polarity Protection	None		Outputs protected from reverse wiring between OUTPWR and OUTCOM terminals	

For product standards and general specifications, refer to Appendix A:.

Input Impedance: APU300

Figure 253: Input Impedance APU300

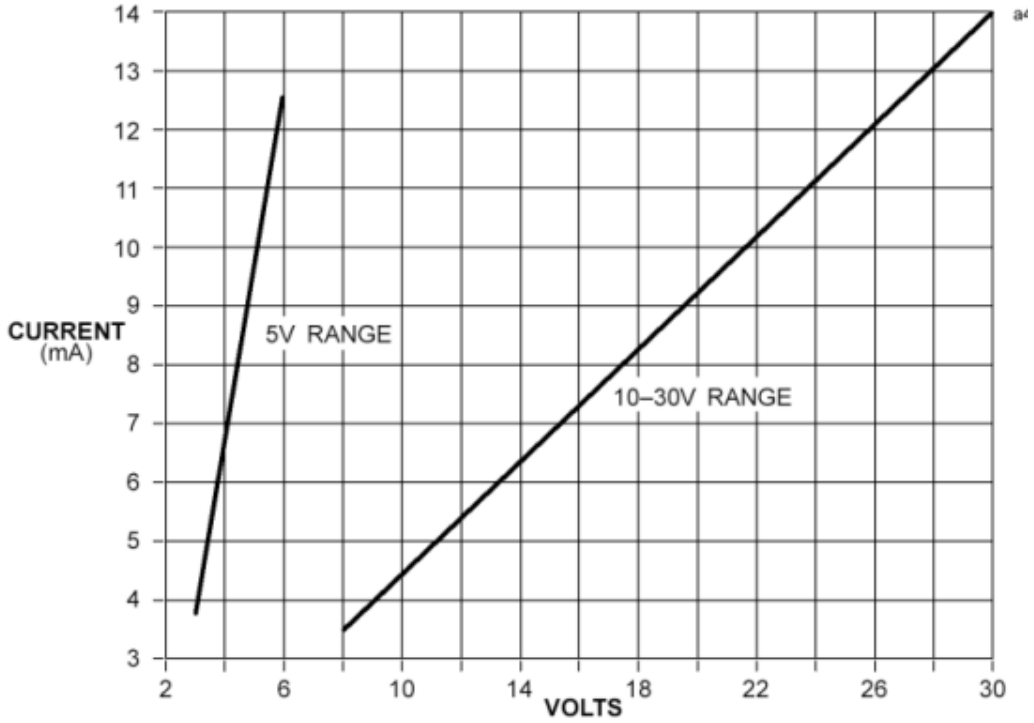

8.1.5 Field Wiring: APU300

Refer to High-Speed Counter Modules for PACSystems RX3i and Series 90-30 User's Manual, GFK-0293D (or later) Chapter 2 for detailed wiring information.

Shielded cable must be used for connecting to the High-Speed Counter module. The shield for the cable must have a high frequency ground within 6 inches (15.24 cm) of Module to meet the IEC 1000-4-4 levels specified in Appendix A:. The cable length is limited to 30 meters.

⚠ CAUTION

Do not connect voltage in the 10 Vdc to 30 Vdc range to Module inputs when the 5 Vdc input range (pins 13 to 15 jumpered) is selected. Doing so will damage Module.

Figure 254: Field Wiring APU300

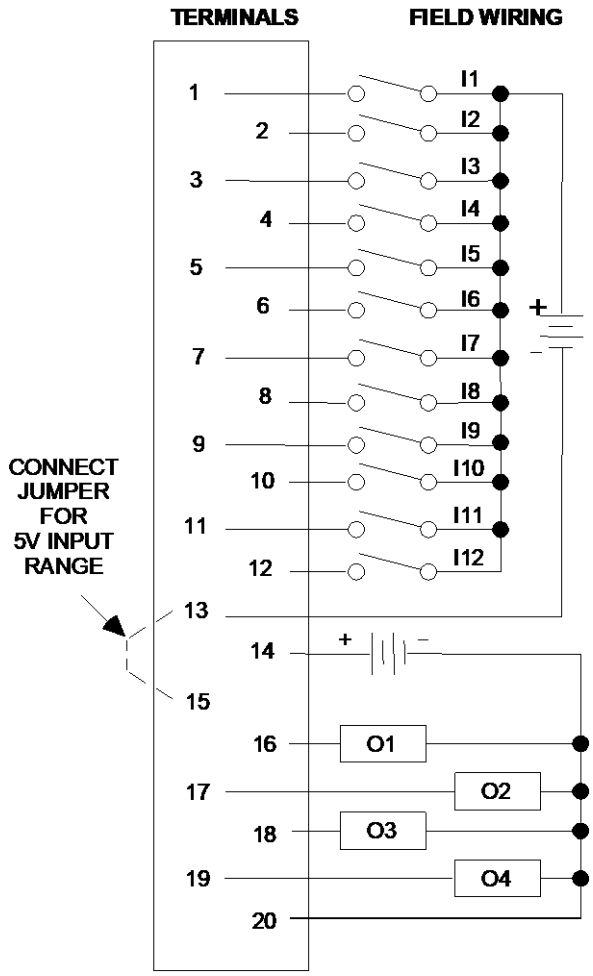

Input Characteristics: APU300

The High-Speed Counter uses single-ended positive logic (source) type inputs.

- Transducers with CMOS buffer outputs (74HC04 equivalent) can directly drive the High-Speed Counter inputs using the 5 Vdc input range.
- Transducers using open collector outputs must include a 470 Ω pull-up resistor to 5 Vdc to guarantee compatibility with the High-Speed Counter inputs.
- Transducers using high voltage open collector (sink) type outputs must have a 1 kΩ pull-up resistor to +12 Vdc for compatibility with the High-Speed Counter 10 to 30 Vdc input range.

Note: Classic versions of the APU300 required that transducers using TTL totem-pole outputs include a 470 Ω pull-up resistor (to 5 Vdc) to guarantee compatibility with the High-Speed Counter inputs. The enhanced APU300 versions do not require a 470 Ω pull-up resistor for such transducers.

Input Voltage Ranges: APU300

The default voltage range is 10 to 30 Vdc. To use this voltage range, leave the threshold selection terminals (pins 13 and 15) unconnected.

To select the 5 Vdc threshold, connect a jumper between two terminals on the detachable terminal board connector.

Terminal Assignments for Each Counter Type (Classic Mode): APU300

The following table shows which terminals to use for the Classic Mode counter type selected during module configuration.

Terminal	Signal Name	Pin Definition	Use in Counter Type[35]		
			Type A	Type B[36]	Type C[37]
1	I1	Positive Logic Input	A1	A1	A1
2	I2	Positive Logic Input	A2	B1	B1
3	I3	Positive Logic Input	A3	A2	A2
4	I4	Positive Logic Input	A4	B2	B2
5	I5	Positive Logic Input	PRELD1	PRELD1	PRELD1.1
6	I6	Positive Logic Input	PRELD2	PRELD2	PRELD1.2
7	I7	Positive Logic Input	PRELD3	DISAB1	DISAB1
8	I8	Positive Logic Input	PRELD4	DISAB2	HOME
9	I9	Positive Logic Input	STRB1	STRB1.1	STRB1.1
10	I10	Positive Logic Input	STRB2	STRB1.2	STRB1.2
11	I11	Positive Logic Input	STRB3	STRB2.1	STRB1.3
12	I12	Positive Logic Input	STRB4	STRB2.2	MARKER
13	INCOM	Common for positive logic inputs	INCOM	INCOM	INCOM
14	OUTPWR[38] DC+	Power for positive logic outputs	OUTPWR	OUTPWR	OUTPWR
15	TSEL	Threshold select, 5V or 10 to 30V	TSEL	TSEL	TSEL
16	O1	Positive Logic Output	OUT1	OUT1.1	OUT1.1
17	O2	Positive Logic Output	OUT2	OUT1.2	OUT1.2
18	O3	Positive Logic Output	OUT3	OUT2.1	OUT1.3
19	O4	Positive Logic Output	OUT4	OUT2.2	OUT1.4

[35] *Notation: Inputs and outputs identified by two numbers separated by a decimal point (x.y) indicate the counter number (x) to the left of the decimal point and the counter element (y) number on the right. For example, STRB1.2 indicates Counter 1, Strobe 2 input.*

[36] *Type B, Type Z Counters:*
A1, B1 are the A and B inputs for counter 1.
A2, B2 are the A and B inputs for counter 2 (classic notation).
A3, B3 are the A and B inputs for counter 3 (enhanced notation).

[37] *Type C Counter:*
A1, B1 are the A and B count inputs for (+) loop
A2, B2 are the A and B count inputs for (–) loop

[38] *OUTPWR **does not** source power for user loads. Output power **must be supplied** from an external supply.*

20	OUTCOM DC-	Common for positive logic outputs	OUTCOM	OUTCOM	OUTCOM

Terminal Assignments for Each Counter Type (Enhanced Mode): APU300

The following table lists terminal block pin assignments based on the counter type combinations and input mode settings. Footnotes appear on the previous page.

Input	C1	C2	C3	C4	I1	I2	I3	I4	I5[35]	I6[35]	I7[35]	I8[35]	I9[35]	I10[35]	I11[35]	I12[35]
Single Ended	A	A	A	A	A1	A2	A3	A4	PRELD1	PRELD2	PRELD3	PRELD4	STRB1	STRB2	STRB3	STRB4
Single Ended	B[36]	-	B[36]	-	A1	B1	A3	B3	PRELD1.1	DISAB1.1	PRELD3.1	DISAB3.1	STRB1.1	STRB1.2	STRB3.1	STRB3.2
Single Ended	C[37]	-	-	-	A1	B1	A2	B2	PRELD1.1	PRELD1.2	DISAB1	HOME	STRB1.1	STRB1.2	STRB1.3	MARKER
Single Ended	A	A	B[36]	-	A1	A2	A3	B3	PRELD1.1	PRELD2.1	PRELD3.1	DISAB3.1	STRB1.1	STRB2.1	STRB3.1	STRB3.2
Single Ended	A	A	Z[36]	-	A1	A2	A3	B3	PRELD1.1	PRELD2.1	‡	‡	STRB1.1	STRB2.1	Z3.1	‡
Single Ended	B[36]	-	A	A	A1	B1	A3	A4	PRELD1.1	DISAB1.1	PRELD3.1	PRELD4.1	STRB1.1	STRB1.2	STRB3.1	STRB4.1
Single Ended	B[36]	-	Z[36]	-	A1	B1	A3	B3	PRELD1.1	DISAB1.1	‡	‡	STRB1.1	STRB1.2	Z3.1	‡
Single Ended	Z[36]	-	A	A	A1	B1	A3	A4	‡	‡	PRELD3.1	PRELD4.1	Z1.1	‡	STRB3.1	STRB4.1
Single Ended	Z[36]	-	B[36]	-	A1	B1	A3	B3	‡	‡	PRELD3.1	DISAB3.1	Z1.1	‡	STRB3.1	STRB3.2
Single Ended	Z[36]	-	Z[36]	-	A1	B1	A3	B3	‡	‡	‡	‡	Z1.1	‡	Z3.1	‡
Differential	A	-	A	-	A1+	A1-	A3+	A3-	PRELD1.1+	PRELD1.1-	PRELD3.1+	PRELD3.1-	STRB1.1+	STRB1.1-	STRB3.1+	STRB3.1-
Differential	B[36]	-	-	-	A1+	A1-	B1+	B1-	PRELD1+	PRELD1-	DISAB1+	DISAB1-	STRB1.1+	STRB1.1-	STRB1.2+	STRB1.2-
Differential	Z[36]	-	-	-	A1+	A1-	B1+	B1-	‡	‡	‡	‡	Z1+	Z1-	‡	‡

8.1.6 ESCP Outputs with 1.5 Amps per Point Minimum

The Enhanced APU300 modules support ESCP (Electronic Short Circuit Protection) for all four outputs. The ESCP fault will be detected if the output channel is shorted to OUTCOM. Module will report ESCP fault condition in the I/O status data – Bit 24 to Bit 27 corresponding to Output1 to Output4 respectively. Also, the output LEDs O1 to O4 will be amber during the short circuit condition.

‡ *No connection.*

8.2 Serial I/O Processor Module: IC694APU305

Figure 255: IC694APU305

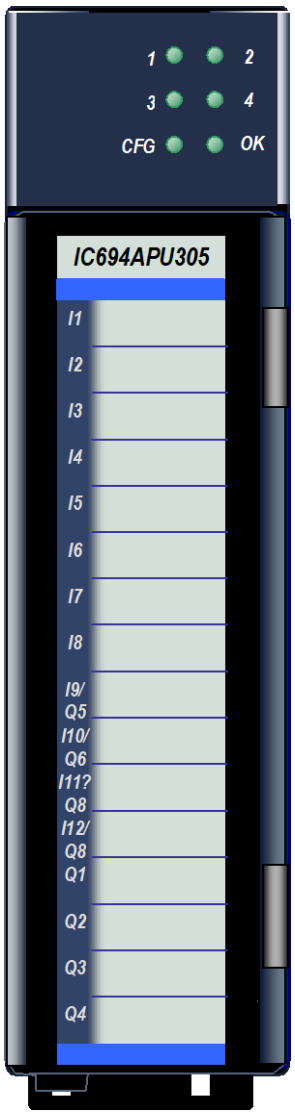

The ***PACSystems RX3i I/O Processor*** module, IC694APU305, provides direct processing of rapid pulse signals for industrial control applications such as:

- Fast response process control
- Velocity measurement
- Material handling, marking, and packaging

Module is able to sense inputs, process the input information, and control the outputs without needing to communicate with a CPU.

Features

- Up to 12 positive logic (source) inputs with input voltage range selection of either 5 Vdc (TTL) or 10 to 30 Vdc (non-TTL).
- Up to eight positive logic (source) outputs: four outputs with 1 amp rating and four configurable outputs with 0.5 A rating
- Outputs protected by replaceable fuse (one fuse for all outputs)
- Counts per Timebase register for input rate measurement
- Total Counts register accumulates total counts received by module
- Four Strobe data registers for input position capture
- Two Timer data registers for indicating input pulse length or input spacing in milliseconds
- Thirty-two range comparators (outputs returned in %I and %AI data)
- Internal module diagnostics

Inputs can be used as count signals or edge-sensitive strobe signals. Outputs can be used to drive indicating lights, solenoids, relays, and other devices.

Power to operate the logic circuitry of Module is obtained from the 5 Vdc bus on the backplane. +24 Vdc power sources for the input and output devices must be supplied (80 mA max).

Module supports insertion into and removal from an RX3i Universal Backplane which is under power. Refer to Section 2.6.4, *Hot Insertion and Removal*.

The I/O Processor module provides a configurable threshold voltage to allow the inputs to respond to either a 5 Vdc signal level or a 10 to 30 Vdc signal level.

Six green LEDs indicate the operating status of Module, the status of configuration parameters, and the state of hardware outputs 1 through 4.

8.2.1 Specifications: APU305

APU305	Specifications
Power Supply Voltage	5 Vdc from backplane
Power Supply Current	360 mA + (10 mA x number of ON faceplate outputs)
Field I/O to logic isolation	Peak (1 second): 1500 V Steady State: 30 Vac/Vdc
Maximum Number of modules per RX3i system	No limit
Input Specifications	
Input type	Positive Logic, optically isolated. Note: Input Common is internally connected to Output Common
Input Circuit Power	Supplied by module using DC/DC converter
Encoder Power	Supplied by user (5 V or 10–30 Vdc). (Inputs will operate with Output Circuit power disconnected)
Input Impedance	4300 Ω typical
Input Threshold	8.0 V (non–TTL), 1.5 V (TTL)
Input Hysteresis	250 mV typical
Maximum Input Voltage	+30 Vdc
Input duty cycle limit	If Input 1–12 voltages exceed 24.0 Vdc, de-rate total input duty cycle from 100% at 40° C to 50% at 60° C
Input filter delays	Absolute Encoder: 20 µs AQUADB Encoder & Preload: 20 µs / 2 µs selectable AQUADB Home Switch: 10 ms AQUADB IN 6–8: 10 ms
Minimum Strobe Input Pulse Width	2 ms (Minimum time between consecutive strobe inputs)
Strobe Register Resolution	1 ms (Maximum time from when strobe input is asserted until the strobe register value is updated)
Maximum Count Rate	30 kHz (Absolute Encoder) 200 kHz (A Quad B Encoder)
Input Cable	Shielded cable recommended, Maximum length: 30 m
Output Specifications	
Output type	Positive Logic, optically isolated
Maximum Supply Voltage	30.0 Vdc
Continuous Output Current (10–30 Vdc supply)	1.0 A (each output 1–4) 0.5 A (each output 5–8)
Total Continuous Output Current at 40° C	4.0 A (total of outputs 1–8)
Output 1–4 derating above 40° C	De-rate total Output 1–4 current to 2.0 A at 60° C
Output 5–8 derating above 40° C	De-rate total Output 5–8 current to 0.5 A at 60° C
Output current using 5 Vdc supply	20 mA typical with 5.0 Vdc supply 2 mA minimum with 4.9 Vdc supply
Inductive Load Clamp Voltage	–8.0 V typical (outputs 1–4) –1.0 V typical (outputs 5–8)
Off-state leakage current	10 mA (each output)
Output Fuse	5 A (5x20mm replaceable) common to all outputs

Output Response Time	500 µs typical

8.2.2 Field Wiring: APU305

Figure 256: Field Wiring APU305

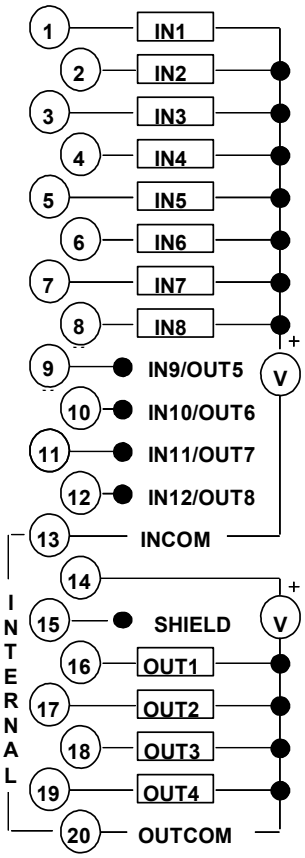

The I/O Processor Module has a removable terminal strip for connection to field devices.

⚠ CAUTION

Do not apply loads greater than 0.5 A to the OUT5 through OUT8 outputs (terminals 9 through 12), or 1.0 A to OUT1 through OUT4 (terminals 16 through 19). Doing so may damage Module.

Notes

- Pin 13 (Input Common) and pin 20 (Output Common) are internally connected together in the IOP module.
- All 12 I/O Processor inputs are positive logic (source) type.
- Transducers using TTL open collector outputs must include a 2000 Ω (maximum) pull-up resistor (to 5 V) to guarantee compatibility with the inputs.
- Transducers using high voltage open collector (sink) type outputs must have a 1 kΩ (maximum) pull-up resistor to +12 V for compatibility with the 10 to 30 V input range.

Typical Connections: APU305

Figure 257: Typical Connections APU305

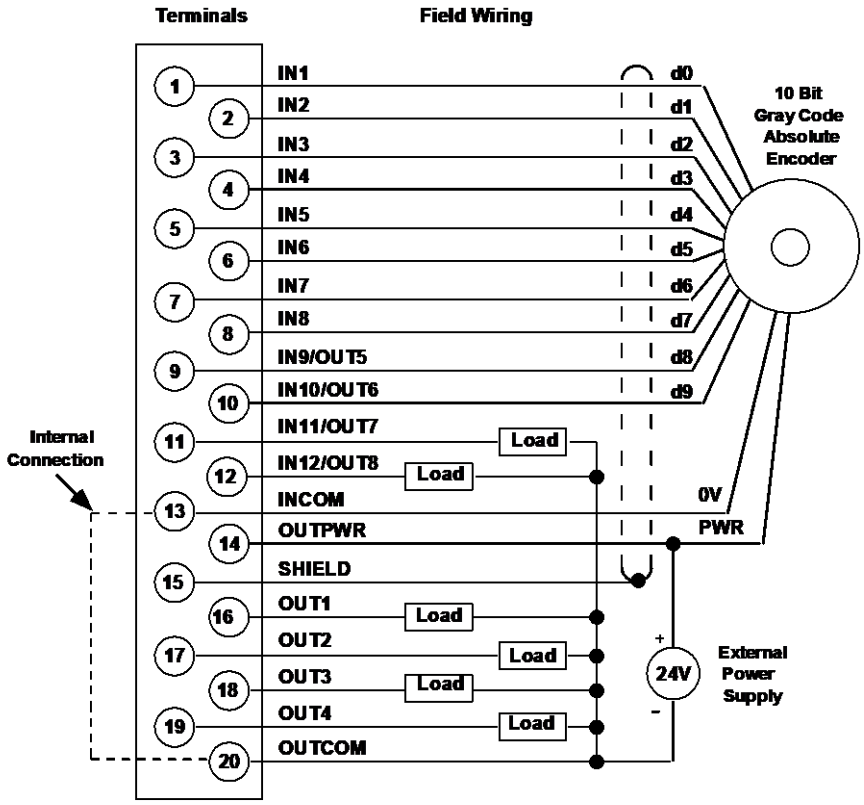

8.2.3 Configuration: APU305

Settings Tab: APU305

Settings	Description
Reference Addresses and Lengths	32 discrete inputs (%I), 15 words of analog inputs (%AI), 32 discrete outputs (%Q), and 6 words of analog outputs (%AQ).
Input Threshold	Selects the Input voltage level to be used. If 5 Vdc inputs are used, select TTL, otherwise select Non-TTL (for 10–30 Vdc inputs). *Default: Non-TTL*
In Timer #1 Mode	Selects the inputs that control the starting and stopping of Timer 1. The resulting time recorded for Timer 1 is reported in the eleventh %AI word. IN10 causes Timer 1 to report the elapsed time (in ms) from the configured edge of input 10 to the other edge of input 10. IN09-10 causes Timer 1 to report the elapsed time (in ms) from the configured edge of input 10 to the configured edge of input 9. *Default: IN10*
In Timer #2 Mode	Selects the inputs that control the starting and stopping of Timer 2. The resulting time recorded for Timer 2 is reported in the twelfth %AI word. IN12 causes Timer 2 to report the elapsed time (in ms) from the configured edge of input 12 to the other edge of input 12. IN11-12 causes Timer 2 to report the elapsed time (in ms) from the configured edge of input 12 to the configured edge of input 11. *Default: IN12*
Timebase (ms)	The timebase for the Counts per Timebase return data (second %AI word). The default is 1000 ms (1 second) resulting in Counts per Timebase return data that indicates input counts per second.
Strobe1 Edge	The strobe 1 (Input 9) trigger edge: positive (rising) or negative (falling).
Strobe2 Edge	The strobe 2 (Input 10) trigger edge: positive (rising) or negative (falling).
Strobe3 Edge	The strobe 3 (Input 11) trigger edge: positive (rising) or negative (falling).
Strobe4 Edge	The strobe 4 (Input 12) trigger edge: positive (rising) or negative (falling).
Strobe1 Enable	Selects whether strobe 1 (Input 9) is Always enabled (default selection) or is only enabled when preset output 5 is On (Rcomp-05 selection).
Strobe2 Enable	Selects whether strobe 2 (Input 10) is Always enabled (default selection) or is only enabled when preset output 6 is On (Rcomp-06 selection).
Strobe3 Enable	Selects whether strobe 3 (Input 11) is Always enabled (default selection) or is only enabled when preset output 7 is On (Rcomp-07 selection).
Strobe4 Enable	Selects whether strobe 4 (Input 12) is Always enabled (default selection) or is only enabled when preset output 8 is On (Rcomp-08 selection).
Output 5	Selects whether point 9 is output or an input. Disabled (default) defines the point as Input #9. Enabled defines it as output #5.
Output 6	Selects whether point 10 is an output or an input. Disabled (default) defines the point as Input #10. Enabled defines it as output #6.

Settings	Description
Output 7	Selects whether point 11 is an output or an input. Disabled (default) defines the point as Input 11. Enabled defines it as output #7.
Output 8	Selects whether point 12 is to be used for an output or an input. Disabled (default) defines the point as Input #12. Enabled defines it as output #8.
Outputs Default	The state outputs will assume if the output mode configured for the CPU is set to Outputs Disabled or the CPU is no longer available. Continue (default) indicates that outputs continue to operate under control of the input counts to the I/O Processor. Force Off causes the outputs to be forced to off Hold Last State causes the I/O Processor to retain the last state of the outputs.
Function	ABS-256 (default): Encoder 8-bit parallel gray code input (for 0–255 counts) ABS-360: Encoder 9-bit parallel (excess 76 gray code for 0–359 count rollover) ABS-512: Encoder 9-bit parallel gray code (for 0–511 counts) If ABS-360 or 512 is selected, Input 9 is not available for a strobe Input and Output 5 is unavailable. ABS-1024: Encoder 10-bit parallel gray code (for 0–1023 counts) If ABS-1024 is selected, Inputs 9 and 10 are not available for strobe Inputs and Outputs 5 and 6 are unavailable. AQUADB: Encoder AQUADB input selection
Encoder Direction	Changes the count direction (up or down) without reversing the Absolute Encoder direction of rotation. If Normal (default) is selected, increasing the count input causes the IOP to register up counts and decreasing the count input causes the IOP to register down counts. The Reverse selection produces the opposite effect.
Position Offset	Adjusts the count input with an offset value to compensate for a rotational offset error in the Encoder coupling. Enter any required count value within the count range. *Default: 0*

A Quad B Encoder Parameters: APU305

Settings	Description
Input Filter	The Input filter range for the AQUADB Count inputs, the Marker input, and the Preload input. If the maximum count input rate is < 25 kHz, use the 20 µs default selection, otherwise use the 2 µs selection. *Default: 20µs.*
Max Counts	The count range for the internal counter registering the AQUADB input counts. It counts from 0 to this maximum value and then rolls over to 0. The range for this parameter is 10 to 64,999 counts. *Default: 255.*
Preload Position	The initializing count value to be set into the input counter when the Preload command is received by the I/O Processor. The Preload command can be from either the Preload input or the %Q bit command. *Range: 0 to maximum counts.*
Home Position	The initializing count value to be set into the input counter when the Marker input is received by the I/O Processor when executing the Home cycle. *Range: 0 to maximum counts.*

ABS or AQUADB Encoder Parameters: APU305

These parameters are repeated for each output.

Setting	Description
Mode	The type of pulse generated by the range comparator output. Preset (the default) causes the output to be On (or Off) continuously from one preset point to the other. Timer causes timed pulses to be produced at the preset points defined by Timer 1 and Timer 2.
ON Preset	The count input value that causes the output to turn On. Can be any value in the count range. Default: Maximum encoder value for Absolute Encoders, 255 for AQUADB mode
OFF Preset	The count input value that causes the output to turn Off. Can be any value in the count range. Default: 0
Timer# 1 (ms)	Effective only when the output mode is Timer. The length of the pulse (in ms) produced by the output when the input count reaches the On preset value. 0 specifies no output pulse at the On preset point. Default: 0
Timer #2 (ms)	Effective only when the output mode is Timer. The length of the pulse (in ms) produced by the output when the input count reaches the Off preset value. 0 specifies no output pulse at the Off preset point. Default: 0

8.2.4 Module Data: APU305

Each CPU sweep, the I/O Processor Module automatically exchanges the following status and command data, with the CPU:

- Status Bits: 32 bits of %I data
- Status Words: 15 words of %AI data
- Discrete Commands: 32 bits of %Q data
- Immediate Command Data: 6 words of %AQ data

%I Status Bits: APU305

The Starting Address of the Status Bits is selected during configuration. The following table lists bit offsets from the Starting Address.

Offset	Description	Offset	Description
00	Range Comparator 1 status	16	Input 9 status
01	Range Comparator 2 status	17	Input 10 status
02	Range Comparator 3 status	18	Input 11 status
03	Range Comparator 4 status	19	Input 12 status
04	Range Comparator 5 status	20	Strobe 1 status (Input 9 latch)
05	Range Comparator 6 status	21	Strobe 2 status (Input 10 latch)
06	Range Comparator 7 status	22	Strobe 3 status (Input 11 latch)
07	Range Comparator 8 status	23	Strobe 4 status (Input 12 latch)
08	Range Comparator 9 status	24	Home Found[39]
09	Range Comparator 10 status	25	Preload Latch status[39]
10	Range Comparator 11 status	26	Home Switch Input (IN5) status[39]
11	Range Comparator 12 status	27	IN6 status[39]
12	Range Comparator 13 status	28	IN7 status[39]
13	Range Comparator 14 status	29	IN8 status[39]
14	Range Comparator 15 status	30	Module Ready
15	Range Comparator 16 status	31	Error

[39] *Applies to AQUADB function only.*

%I Status Bit Descriptions: APU305

Status	Description
Range Comparator 1-8 Status	The ON/OFF state for range comparator outputs 1-8. If the Output Mode = Preset, the state of the status bit is defined by the ON/OFF presets. If the Output Mode = Timer, the status bit will be on after each preset point is passed for the length of time designated by Timer 1 or Timer 2. These bits always indicate the output state for range comparators 1-8, even if the corresponding hardware output is disabled (and Terminal Points 9-12 are used as Inputs).
Range Comparator 9-16 Status	The ON/OFF state for range comparator outputs 9-16 based solely on the ON & OFF presets defined for each output.
Input 9-12 Status	The present on/off input status for Inputs 9-12. State changes in these inputs produce strobe inputs 1-4 according to the configured strobe edge (input 9 = strobe 1, input 10 = strobe 2, etc.).
Strobe 1-4 status (Input 9-12 latch)	Indicates that strobe data has been captured by Inputs 9-12, respectively. Once acknowledged, the corresponding %Q command (Reset Strobe) should be sent to clear the strobe status for future strobe captures. *Following strobes will be locked out until this flag is cleared*.
Home Found (AQUADB only)	Indicates that the Home marker, after a Home command sequence, has been recognized and the AQUADB Input Counter has been set to the Home preload value.
Preload Latch Status (AQUADB only)	Indicates that the AQUADB input counter has been preloaded by a Preload Input. When acknowledged, this status indication should be cleared (by the Reset Preload Latch %Q bit). *This latch locks out the effect of the Preload Input, it will not be effective again until this bit is cleared. This latch does <u>not</u> apply to the %Q preload command bit.*
Home Switch Input (AQUADB only)	The status of the Home switch input. When this switch is closed during the Home cycle, the next encoder marker encountered will preload the counter with the configured Home value and set the Home Found %I indication. If a Home Switch is not used, this %I bit can be used as a general-purpose input reporting the status of faceplate Input 5.
IN6, IN7, IN8 (AQUADB only)	The on/off status of Inputs 6, 7, & 8.
Module Ready	Power-up tests have all completed successfully and Module is ready for operation.
Error	An error condition has been detected by Module. The error code is reported in the first %AI word. If the error was caused by a bad data command, the data has been ignored. Once acknowledged by the program, the %Q command (Clear error) must be toggled to clear the error status.

%AI Data Words: APU305

The following %AI Data words are transferred automatically to the CPU each sweep. The Starting Address of the Status Words is selected during configuration. The following table lists word offsets from the Starting Address.

Offset	Description
000	Module Status Code
001	Counts per timebase
002	Gray Code Encoder Data[40]
003	Binary Data
004–005	Total Counts
006	Strobe Data 1 (Input 9)
007	Strobe Data 2 (Input 10)
008	Strobe Data 3 (Input 11)
009	Strobe Data 4 (Input 12)
010	Start/Stop Timer 1 Data
011	Start/Stop Timer 1 Data
012	Range Comparator 17-32 status (16 bits)
013, 014	reserved

[40] *Not applicable for the AQUADB function selection.*

%AI Data Word Descriptions: APU305

Subject	Description	
Module Status Code	Indicates the Error identification code when an error has been detected. The error identified is the first error encountered. The error condition must be cleared before other errors will be reported.	
	Error Code	Description
	0010	Encoder Position Offset out of range (ABS Encoder Function only)
	xx11	ON Preset xx is out of range
	xx12	OFF Preset xx is out of range
	0015	Home Position out of range (AQUADB Function only)
	0016	Preload Position out of range (AQUADB Function only)
	001E	AQUADB Input Quadrature error (AQUADB Function only)
	001C	Internal Home Command Sequence State Machine Error (AQUADB function only)
	001D	Absolute Encoder Input Error (ABS Encoder Function Only)
Counts per Timebase	Indicates the number of input counts received in the last time interval defined by the Timebase configuration parameter. With the default Timebase (1000 ms), this indicates counts per second.	
Gray Code Encoder Data	Indicates the Gray code value presently being received by Module inputs from the Encoder parallel outputs (ABS Encoder only)	
Binary Data	The binary equivalent of the Gray code value being received by Module inputs from the Encoder parallel outputs, or the input counter Binary count value for the AQUADB selection.	
Total Counts	The total input counts received by Module. This total counts register can be initialized (preloaded) by a %AQ data command from the CPU. It is initialized to 0 at power-up. For AQUADB operation, it is also initialized to 0 at the Home position marker. In AQUADB mode, the Preload Input does not affect Total Counts.	
Strobe Data 1-4	The captured input binary data value recorded when the strobe input occurred. Inputs 9-12 correspond to Strobe inputs 1-4, respectively. Either input edge may be configured to trigger the strobe data capture.	
Start/Stop Timer 1 Data (ms)	The time (in ms) between the input edges of Input 10 (default) or the input edges of Inputs 9-10 depending upon the configuration. To start the capture of this timing data, the strobe latch for Input 10 must be cleared, and if the strobe 2 enable configuration is RCOMP–6, the output range comparator 6 must be on when the Input 10 strobe occurs. If Input 9 is used to stop the time measurement and the strobe 1 enable configuration is RCOMP–5, output range comparator 5 must be on (when strobe input occurs) before the timing will stop.	

Subject	Description
Start/Stop Timer 2 Data (ms)	The time (in ms) between the input edges of Input 12 (default) or the input edges of Inputs 11-12 depending upon the configuration. To start the capture of this timing data the strobe latch for Input 12 must be cleared, and if the strobe 4 enable configuration is RCOMP–8, output range comparator 8 must be on when the Input 12 strobe occurs. If Input 11 is used to stop the time measurement and the strobe 3 enable configuration is RCOMP–7, output range comparator 7 must be on (when strobe input occurs) before the timing will stop.
Range Comparator 17-32 status (16 bits)	Indicates the ON/OFF state for range comparator outputs 17-32 based solely on the ON and OFF presets defined for each output.

%Q Control Bits: APU305

The following %Q Control Bits are transferred automatically to the CPU each sweep. The Starting Address of the Control Bits is selected during configuration. The following table lists bit offsets from the Starting Address.

Offset	Description	Offset	Description
00	Enable Output 1	16 - 19	reserved
01	Enable Output 2		
02	Enable Output 3		
03	Enable Output 4		
04	Enable Output 5 (only if cfg = enabled)	20	Reset Strobe 1 (Input 9 latch)
05	Enable Output 6 (only if cfg = enabled)	21	Reset Strobe 2 (Input 10 latch)
06	Enable Output 7 (only if cfg = enabled)	22	Reset Strobe 3 (Input 11 latch)
07	Enable Output 8 (only if cfg = enabled)	23	Reset Strobe 4 (Input 12 latch)
08 - 15	reserved	24	Home Command[41]
		25	Reset Preload Latch[41]
		26	Preload Command[41]
		27 - 30	reserved
		31	Clear Error

[41] *Applies to AQUADB function only.*

%Q Control Bit Descriptions: APU305

Status	Description
Enable Output 1-8	Enables each hardware Output (ON = Enable). If the configuration for Outputs 5-8 is DISABLED, these corresponding output bit commands have no effect.
Reset Strobe 1-4 (Input 9-12 Latch)	Clears the respective strobe latch condition so the next strobe can be captured and reported via the corresponding %I bits. If this %Q bit is held ON, the %I status bit will stay OFF and every strobe input pulse will cause new strobe data to be captured in the associated %AI strobe register.
Home Command (AQUADB only)	Initiates the Home command sequence. When the Home Marker Input is recognized, the input counter will be preloaded with the configured home value, and the Home Found %I indication will be set.
Reset Preload Latch (AQUADB only)	Clears the Preload Latch status after it has been set by the Preload switch input. If this command is left on, it will allow all Preload switch inputs to be effective.
Preload Command (AQUADB only)	Preloads the input counter with the configured preload value. The Preload Latch status %I indication will not be set by this command since it only applies to the Preload faceplate input.
Clear Error	Toggling this command ON clears Module status error condition reported by the %I Error bit and the %AI module status word and thus allows another error condition to be reported.

%AQ Immediate Commands: APU305

Six %AQ words are sent automatically from the CPU to the I/O Processor Module during each sweep. These words can be used to transfer immediate command data to Module for temporarily altering configuration parameters or to initialize counter data. Configuration parameter changes made in this manner do not affect Module configuration data (stored in the CPU) which will again become effective if Module is power cycled.

Each immediate command requires three sequential %AQ words. Two immediate commands are always sent during each PLC sweep. The first word of each command set contains the identifying command number and the other two words contain the data. The actual address of each command word depends on the starting address configured for the %AQ references. Even though the commands are sent each sweep, Module will act on a command *only* if the command has changed since the last sweep. Whenever any of the three-word data changes, Module accepts the data as a new command and responds accordingly.

When these commands are sent, all three %AQ words should be loaded on the same PLC sweep. If they cannot be loaded on the same sweep (for example, when entering data from the programmer), the steps below must be followed to ensure that no wrong or incomplete data is momentarily sent.

1. Set Word 1 to Null Command (0000).
2. Set correct data in Words 2 and 3.
3. Set command in Word 1.

The following immediate commands may be sent by %AQ data to the I/O Processor:

Command	Data		Command # (hex)
	Word 3	Word 2	Word 1
Null	(not used)	(not used)	0000
Load Home Position (AQUADB)[42]	(not used)	Home Position	0101
Load Preload Position (AQUADB)[42]	(not used)	Preload Position	0102
Load Timebase	(not used)	Timebase (ms)	0106
Load Encoder Position Offset[43]	(not used)	Offset	0107
Load Total Counts	(not used)	Counts	0109
Load ON/OFF Preset Pairs 1-32	OFF preset	ON preset	0140 - 015F
Load Output Timer 1.1-8.1	(not used)	Time (ms)	01C0 - 01C7
Load Output Timer 1.2-8.2	(not used)	Time (ms)	01D0 - 01D7

[42] *AQUADB function only.*

[43] *ABS Encoder function only.*

%AQ Immediate Command Descriptions: APU305

Command	Description
Null	The default %AQ Immediate command. Since the %AQ words are transferred each PLC sweep, you should always enter the Null command to avoid inadvertent execution of another immediate command.
Load Home Position (AQUADB)	The Home reference position value that will be preloaded into the Input counter at the marker location after a Home command.
Load Preload Position (AQUADB)	The position value that will be preloaded into the Input Counter when a Preload Switch Input is recognized, or the %Q Preload command is set.
Load Timebase	The timebase to be used for determining the Counts per Timebase value returned in the second %AI word assigned to Module.
Load Encoder Position Offset (ABS Encoder Function only)	The Encoder offset value. The Input Count Value is shifted relative to the Encoder Input by this amount as follows: Input Count Value = Encoder Input - Offset
Load Total Counts	The Total Count value reported in the fifth and sixth %AI words assigned to Module
Load ON/Off Preset Pairs 1-32	The ON and OFF preset value for the specified range comparator output.
Load Output Timer 1.1-8.1	The Output Timer 1 value for the specified range comparator output 1-8.
Load Output Timer 1.2-8.2	The Output Timer 2 value for the specified range comparator output 1-8.

8.3 High-Speed Counter Modules: IC695HSC304, IC695HSC308

For detailed information about both RX3i High-Speed Counter modules, please refer to the *RX3i High-Speed Counters Manual*, GFK-2441.

Figure 258: IC695HSC308

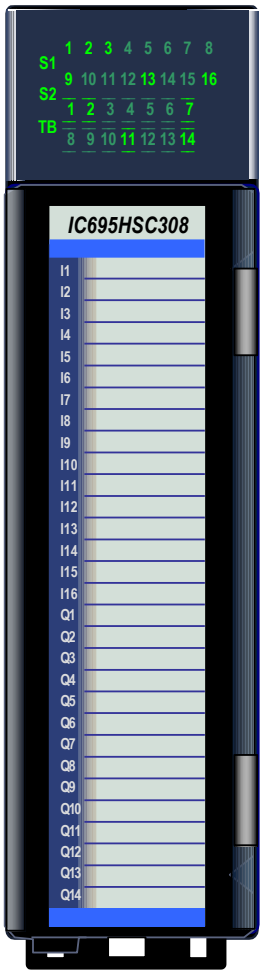

PACSystems ***RX3i High-Speed Counter*** modules provide direct processing of rapid pulse signals up to 1.5 MHz for industrial control applications such as:

- Turbine flowmeter
- Meter proving
- Velocity measurement
- Material handling
- Motion control
- Process control

These modules can sense inputs, process input count information, and control outputs without CPU intervention.

High-Speed Counter module IC695HSC304 provides:
8 high-speed inputs, 7 high-speed outputs, and 1 to 4 counters.

High-Speed Counter module IC695HSC308 provides:
16 high-speed inputs, 14 high-speed outputs, and 1 to 8 counters.

Standard counter types A, B, C, D, E, Z, and a user-defined type can be combined on a module.

Module features include:

- Terminal Block insertion or removal detection
- Meets CE, UL/CUL 508 and 1604, and ATEX requirements
- Flash memory for future upgrades
- Module fault reporting
- Configurable I/O Interrupts
- Select module parameters easily changed without re-configuration.

These modules must be located in an RX3i Universal Backplane.

Module supports insertion into and removal from an RX3i Universal Backplane which is under power. Refer to Section 2.6.4, *Hot Insertion and*

Removal. When Module is removed from the backplane or is power-cycled, it stops counting and accumulated counts are lost.
High-Speed Counter modules can be used with a Box-style (IC694TBB032), Extended Box-style (IC694TBB132), Spring-style (IC694TBS032), or Extended Spring-style (IC694TBS132)) Terminal Block (Refer to Chapter 17). Extended terminal blocks provide the extra shroud depth needed for shielded wiring. Terminal Blocks are ordered separately.

8.3.1 LEDs: HSC304 & HSC308

Individual green LEDs indicate the ON/OFF status of the external input and output points of this module. These LEDs are green when the corresponding points are on. They are off when the corresponding points are off. LED positions are illustrated below.

Figure 259: LED Layout HSC304 & HSC308

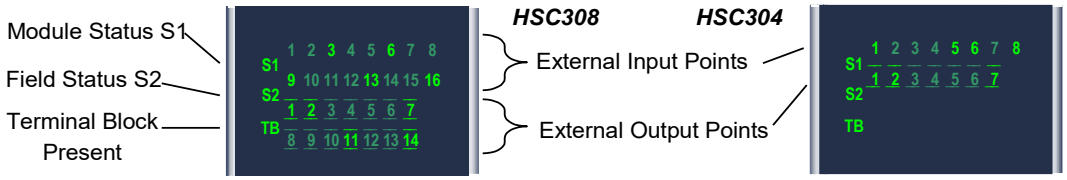

Module Status (S1) LED indicates the status of Module. Solid green indicates that Module has been configured. Blinking green indicates no configuration. Blinking amber/yellow indicates a fatal module failure.

The Field Status (S2) LED is off if field power is not present. For module IC695HSC308, this LED is off unless power is present on BOTH V_A and V_B. Solid green indicates that field power is present and that no output circuit faults have been detected on circuits for which fault detection has been enabled in the configuration. If S2 is amber/yellow, field power is present, but circuit faults exist for one or more outputs.

The red/green Terminal Block LED is green when the removable terminal block of this module is locked in place. It is red when the terminal block is not locked. Module also sends an *Addition of Terminal Block* or *Loss of Terminal Block* message to the RX3i CPU to report the Terminal Block status.

During a firmware update, the S1, S2, and TB LEDs blink in a green/off pattern.

8.3.2 Specifications: HSC304 & HSC308

Feature	Specification	
Number of Counter Channels	IC695HSC304: 4 counters (8 inputs and 7 outputs) IC695HSC308: 8 counters (16 inputs and 14 outputs)	
High-Speed Counter Types	Configurable as Types A, B, C, D, E, Z, and User-Defined.	
Maximum Count Rates	1.5 MHz with configurable input filtering, all counter types except 750 kHz for Type C or User-Defined when using four counter outputs. (40 MHz internal oversampling). For A-Quad B count mode, 1.5 MHz is the maximum overall count rate.	
Counting Range	-2147483648 to 2147483647	
Oscillator Accuracy Over Operating Temperature Range	±100 ppm	
Oscillator Drift Over Time	±5 ppm maximum per year	
Backplane Power Requirements	IC695HSC304:	64 mA maximum at 5 Vdc 457 mA maximum at 3.3 Vdc
	IC695HSC308:	94 mA maximum at 5 Vdc 561 mA maximum at 3.3 Vdc
LEDs	Module Status (S1), Field Status (S2), Terminal Block (TB), plus LEDs to indicate state of each input and output point.	
Input Voltages	5 Vdc nominal: 4.7 Vdc to 5.5 Vdc 12 to 24 Vdc nominal: 10 Vdc to 26.4 Vdc	
Peak input voltage	35 Vdc	
Input Impedance	>5 kΩ	
Output Voltage Range	4.7 to 40 Vdc, V_A/V_B input range	
Output Current Rating	1.5 A maximum per channel, 10.5 A maximum per module	
Thermal De-rating	Number of output points on at the same time depends on ambient temperature and current per point. For module IC695HSC308, thermal de-rating also depends on distribution of output points on Module. Refer to the charts that follow (Figure 260 & Figure 261)	
Output Control	Module outputs can be mapped to any number of counter setpoint outputs. Each counter controls up to 4 setpoints with “turn on” and “turn off” values. If multiple setpoint outputs are assigned to the same external module output, the signals are logically ORed. External outputs can optionally be configured for control through output scan bits from PLC memory.	

Feature	Specification
Surge Current per Point	4.5A < 450 µS (Self-protected for overcurrent faults)
Minimum Load Current	0 mA (up to 150 mA to satisfy open load detection)
Maximum On State Voltage Drop/Output	0.35 Vdc at 1.5 A
Maximum Off-State Leakage Current/Output	200 µA
Output Delay time	Off to On: 125 µS at 1.5 A On to Off: 85 µS at 1.5 A
Current Limit	4.5 A < 450 µS, 1.5 A continuous
Reverse Polarity Protection	Outputs protected from reverse wiring
Isolation	*Field to Backplane:* 250 Vac continuous; 1500 Vac for 1 minute Field to Frame Ground, Inputs to Outputs, Output Group A to Output Group B: 50 Vac continuous; 500 Vac for 1 minute

Thermal Derating: HSC304 & HSC308 Outputs

The charts below show thermal deratings for modules IC695HSC304 and IC695HSC308 with maximum loads of 0.75 A on each output.

For example, if five outputs are used on module IC695HSC304, at 60°C the total current of all outputs would be 3.75 A. If smaller loads are used on the outputs, then more output channels can be used at a given temperature.

Figure 260: Thermal Derating HSC304 Outputs

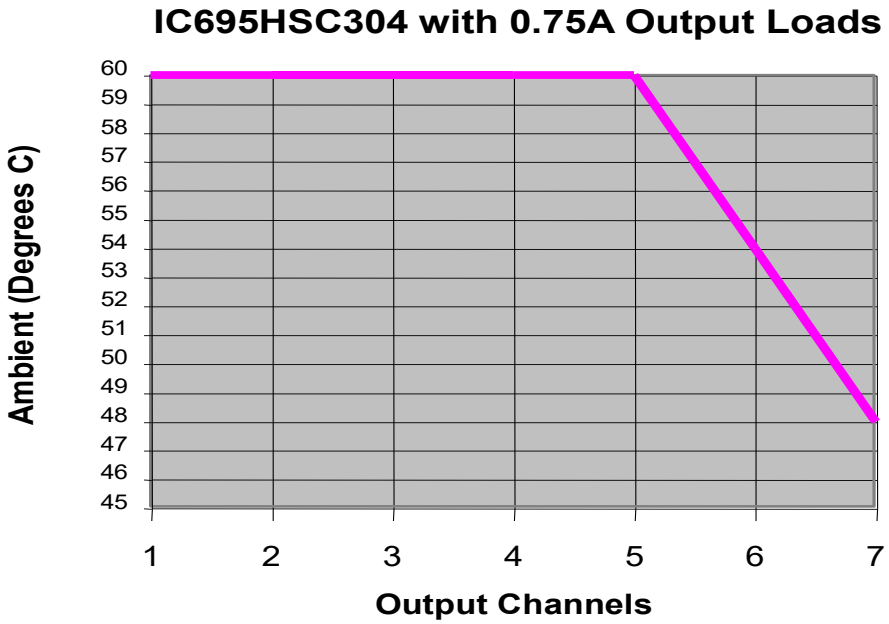

For module IC695HSC308, more output channels can be used at the same time at a given ambient temperature when outputs are evenly distributed into two groups. If outputs are either set up as one output group or unevenly distributed between two output groups, fewer output channels can be used for a given ambient temperature.

For example, if eight outputs are used on module IC695HSC308, and they are equally distributed between two output groups, the total current of all outputs at 60°C can be up to 6 A. At a given ambient temperature, if smaller loads are used on the outputs, more output channels can be used.

Figure 261: Thermal Derating HSC308 Outputs

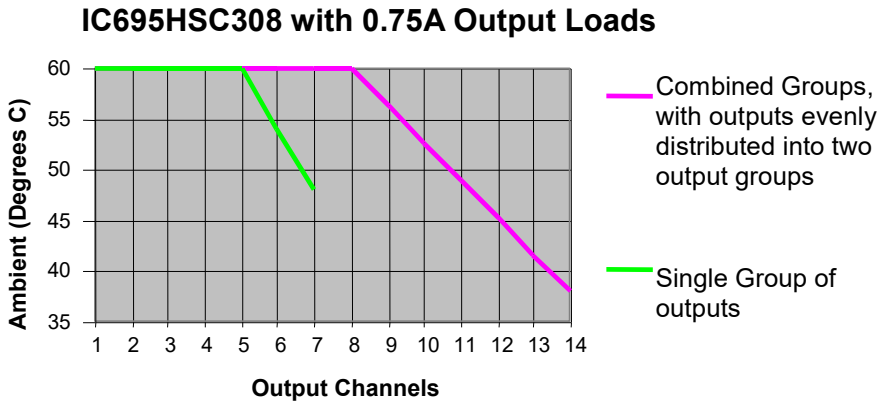

8.3.3 Field Wiring: HSC304 & HSC308

Field wiring connections are made to the removable terminal assembly. For installations that must meet radiated emissions requirements as in EN 55022, high-speed connections must be made with double-shielded cable. The outside braided shield should be terminated at the entrance to the enclosure and not continue within the enclosure. Both ends of the shielded cable should be grounded. If low-frequency (power line) ground loops are an issue with the application, directly ground one end of the shielded cable and capacitively tie the other end of the shielded cable to ground with approximately 0.01µF capacitance.

Field Wiring: HSC304

Connection	Terminal
Input 1	1
Input 2	2
Input 3	3
Input 4	4
Input 5	5
Input 6	6
Input 7	7
Input 8	8
Common	9
Output 1	10
Output 2	11
Output 3	12
Output 4	13
Output 5	14
Output 6	15
Output 7	16
DC+ for Voltage Source A	17
DC- for Voltage Source A	18

Figure 262: Field Wiring HSC304

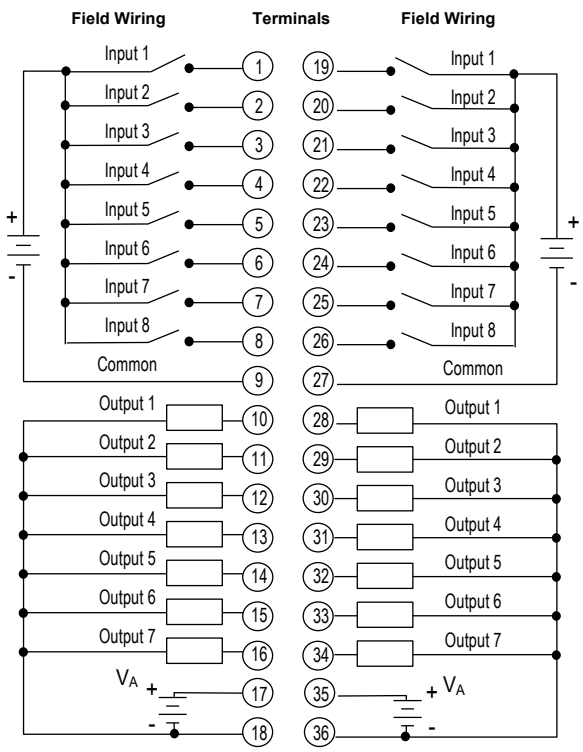

Terminal	Connection
19	Input 1
20	Input 2
21	Input 3
22	Input 4
23	Input 5
24	Input 6
25	Input 7
26	Input 8
27	Common
28	Output 1
29	Output 2
30	Output 3
31	Output 4
32	Output 5
33	Output 6
34	Output 7
35	DC+ for Voltage Source A
36	DC- for Voltage Source A

All outputs on module IC695HSC304 form a single output group. Each row of terminals (i.e.: 1-18, 19-36) is internally connected. The dual connection points are for wiring convenience; Module cannot be wired

for differential inputs. For load distributions, Refer to *Thermal Derating: HSC304 & HSC308 Outputs* above.

Field Wiring: HSC308

All sixteen High-Speed Counter inputs on this module are positive logic (source) type.

Connection	Terminal
Input 1	1
Input 2	2
Input 3	3
Input 4	4
Input 5	5
Input 6	6
Input 7	7
Input 8	8
Common	9
Output 1	10
Output 2	11
Output 3	12
Output 4	13
Output 5	14
Output 6	15
Output 7	16
DC+ for Voltage Source A	17
DC- for Voltage Source A	18

Figure 263: Field Wiring HSC308

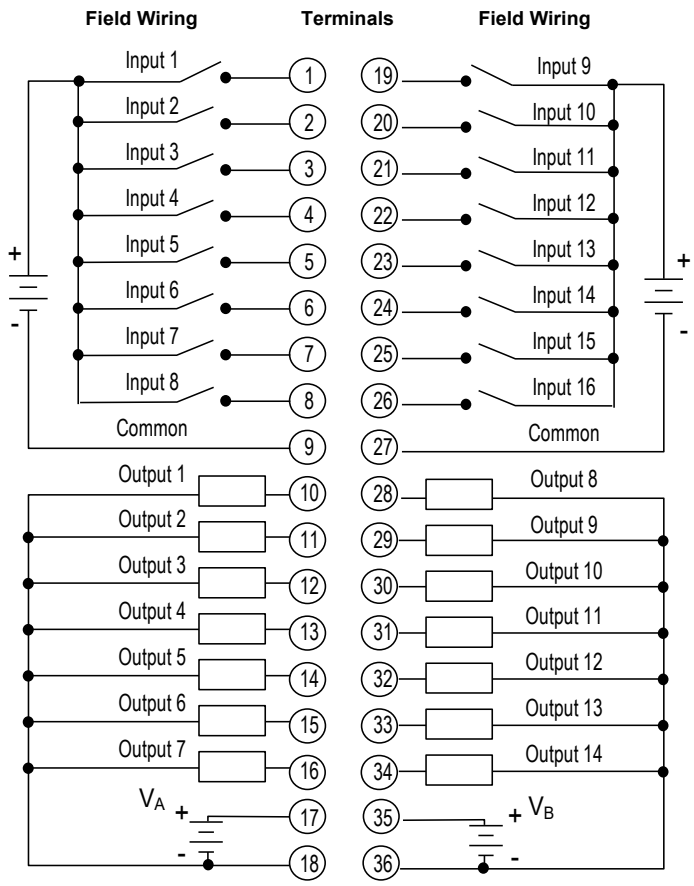

Terminal	Connection
19	Input 9
20	Input 10
21	Input 11
22	Input 12
23	Input 13
24	Input 14
25	Input 15
26	Input 16
27	Common
28	Output 8
29	Output 9
30	Output 10
31	Output 11
32	Output 12
33	Output 13
34	Output 14
35	DC+ for Voltage Source B
36	DC- for Voltage Source B

Inputs 1 to 16 form one isolated input group.
Outputs 1 to 7 and 8 to 14 form two isolated output groups, each with its own voltage connections.

Outputs should be evenly distributed between the two output groups, as discussed under *Thermal Derating: HSC304 & HSC308 Outputs* above.

8.4 Mixed I/O Module: IC694MDR390

The ***24 Vdc 8-Input/8-N.O. Relay Output*** module provides eight isolated input points with one common power input terminal, and eight isolated normally open relay circuits in the same module.

The input circuits can have either positive or negative characteristics in that they sink or source current to/from the input devices to/from the user common. Input characteristics are compatible with a wide range of user-supplied devices, such as pushbuttons, limit switches, and electronic proximity switches. Current through an input results in a logic 1 in the input status table (%I).

The relay output circuits are arranged in two groups of four circuits each. Each group has a common power output terminal. The normally-open relay circuits are used for controlling output loads provided by the user. The output switching capacity of each output is 2 A. The relay outputs can control a wide range of user-supplied load devices, such as motor starters, solenoids, and indicators.

The top half of the outside left edge of the insert is color-coded blue to indicate low-voltage circuits and the bottom half of the outside left edge is color-coded red to indicate high-voltage circuits.

This module can be installed in any I/O slot in an RX3i PLC System.

Module does not support insertion into or removal from an RX3i Universal Backplane which is under power (see *Hot Insertion and Removal Not Supported*).

Power for the internal relay circuits is provided by the +24 Vdc bus on the backplane. The user must supply the AC or DC power to operate field devices. There are no fuses on this module.

Figure 264: IC694MDR390

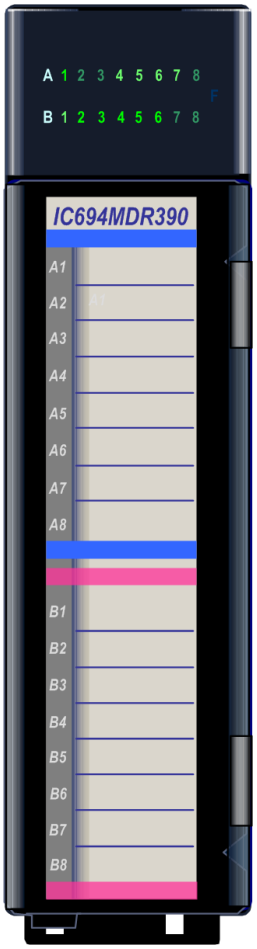

8.4.1 LEDs: MDR390

LED indicators that provide the ON/OFF status of each point are visible through the lens at the top of Module. The LEDs are arranged in two horizontal rows with eight green LEDs in each row. The top row (labeled A1 through A8) indicates the states of the input points (1 through 8). The bottom row (labeled B1 through B8) indicates the states of the relay output points (1 through 8).

8.4.3 Specifications: MDR390

Feature	Specification
Inputs	
Rated Voltage	24 Vdc
Input Voltage range	–30 to +32 Vdc
Inputs per Module	8 (one group of eight inputs)
Isolation	1500 Vrms between field and logic side
	500 Vrms between inputs
Input Current	7.5 mA (typical) at rated voltage
Input Characteristics	
On-State Voltage	15 to 32 Vdc
Off-State Voltage	0 to +5 Vdc
On-State Current	4 mA (minimum)
Off-State Current	1.5 mA (maximum)
On Response Time	7 ms typical
Off Response Time	7 ms typical
Outputs	
Rated Voltage	24 Vdc, 120/240 Vac
Operating Voltage	5 to 30 Vdc
	5 to 250 Vac, 50/60 Hz
Outputs per Module	8 (two groups of four outputs each)
Isolation	1500 Vrms between field and logic side
	500 Vrms between groups
Maximum Load	2 A maximum per output
	4 A maximum per common
Minimum Load	10 mA
Maximum Inrush	5 Amps
On Response Time	15 ms maximum
Off Response Time	15 ms maximum
Internal Power Consumption	80 mA (all I/O on) from +5 Vdc backplane bus
	70 mA (all outputs on) from relay +24 Vdc backplane bus

Maximum load current is dependent on operating voltage as displayed in the following table.

Load Current Limitations: MDR390

Operating Voltage	Maximum Current for Load Type		Typical Operations (number of operations)
	Resistive	Lamp or Solenoid [44]	
240 Vac, 120 Vac, 24 Vdc	2 A	0.6 A	200,000
240 Vac, 120 Vac, 24 Vdc	1 A	0.3 A	400,000
240 Vac, 120 Vac, 24 Vdc	0.5 A	0.1 A	800,000

Relay contact life, when switching inductive loads, will approach resistive load contact life if suppression circuits are used. The following figures are examples of typical suppression circuits for AC and DC loads. The 1A, 100V diode shown in the DC load typical suppression circuit is an industry standard 1N4934. The resistor and capacitor shown for AC load suppression are standard components, available from most electronics distributors.

Figure 265: Suppression of DC Loads MDR390

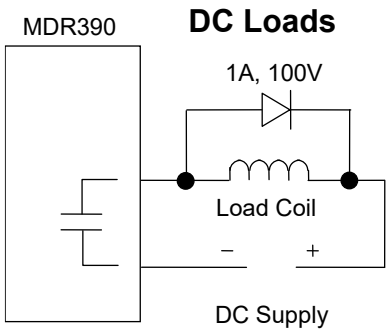

Figure 266: Suppression of AC Loads MDR390

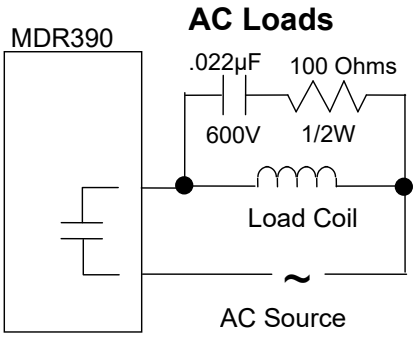

[44] *For inductive loads.*

8.4.4 Field Wiring: MDR390

The following figure provides wiring information for connecting user-supplied input and load devices, and power source(s) to the 24 V Input/Relay Output module:

Figure 267: Field Wiring Diagram MDR390

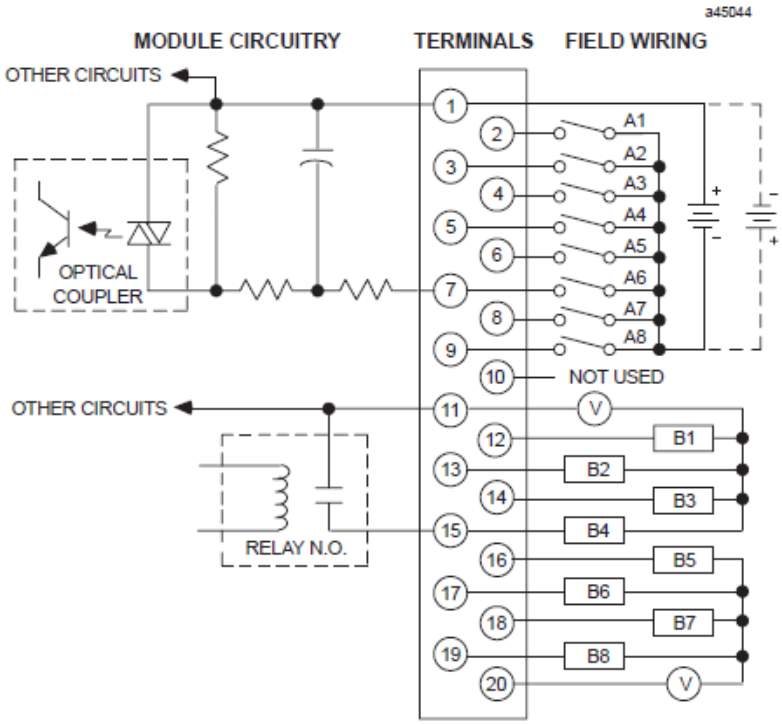

Section 9: Analog Input Modules

This chapter describes Analog Input modules for PACSystems RX3i controllers.

Analog Input Module Description	Catalog Number	Section
Analog Input Module 6-Channel Isolated Current/Voltage	IC695ALG106	9.1
Analog Input Module 12-Channel Isolated Current/Voltage	IC695ALG112	9.1
Analog Input Module 4-Channel Voltage	IC694ALG220	9.2
Analog Input Module 4-Channel Current	IC694ALG221	9.3
Analog Input Module 16/8-Channel Voltage	IC694ALG222	9.4
Analog Input Module 16-Channel Current	IC694ALG223	9.5
Advanced Diagnostics Analog Input module: 8/16-Channel Voltage	IC694ALG232	9.6
Advanced Diagnostics Analog Input module: 16-Channel Current	IC694ALG233	9.7
Analog Input Module 8-Channel Non-Isolated/4-Channel Differential	IC695ALG608	9.8
Analog Input Module 16-Channel Non-Isolated/8-Channel Differential	IC695ALG616	9.8

9.1 Analog Input Modules Isolated Current/Voltage: IC695ALG106 and IC695ALG112

Figure 268: IC695ALG112

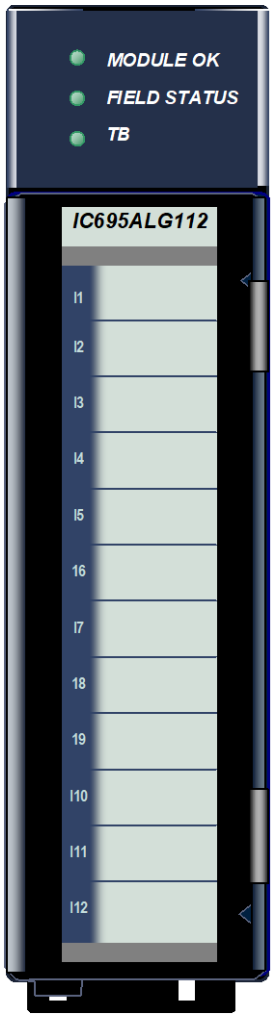

Isolated Analog Current/Voltage Input module IC695ALG106 provides 6 isolated input channels.

Isolated Analog Current/Voltage Input module IC695ALG112 (Figure 268) provides 12 input channels.

Analog input channels can be configured for these ranges:

- Current: 0 to 20 mA, 4 to 20 mA, ±20 mA
- Voltage: ±10 Vdc, 0 to 10 Vdc, ±5 Vdc, 0 to 5 Vdc, 1 Vdc to 5 Vdc

These modules must be installed in an RX3i Universal Backplane.

Modules require the use of one front-mounted terminal block (ordered separately). Terminal blocks are available in the following different styles:

- Box-style (IC694TBB032),
- Extended Box-style (IC694TBB132),
- Spring-style (IC694TBS032), and
- Extended Spring-style (IC694TBS132).

Extended terminal blocks provide the extra shroud depth needed for shielded wiring. Refer to

Terminal Block Detection below for more information about terminal blocks.

Note: Terminal blocks for this module must be ordered separately.

9.1.1 Features

- Completely software-configurable, no module jumpers to set
- On-board error-checking
- Open-circuit detection for all voltage and 4–20 mA inputs[46]
- Configurable scaling and offsets per channel
- High alarm, low alarm, high-high alarm, low-low alarm detection and reporting selectable per channel
- Module fault reporting
- Supports diagnostic point fault contacts in the logic program
- Flash memory for future upgrades
- Positive and negative Rate of Change Alarms
- Configurable interrupts for channel alarms and faults
- Terminal Block insertion or removal detection
- Module supports insertion into and removal from an RX3i Universal Backplane which is under power. Refer to *Hot Insertion and Removal.*

9.1.2 Specifications: ALG106 & ALG112

ALG106/ALG112	Specifications		
Input Ranges	Current: 0 to 20 mA, 4 to 20 mA, ±20 mA Voltage: ±10 Vdc, 0 to 10 Vdc, ±5 V, 0 to 5 V, 1 to 5 V		
Power Requirements (from the backplane)	ALG106-EA or earlier: 230 mA maximum at 5.0 V +5% / -2.5%, 320 mA maximum at 3.3 V +5% / -3% ALG112-EA or earlier: 490 mA maximum at 5.0 V +5% / - 2.5%, 310 mA maximum at 3.3 V +5% / - 3%		
	ALG106-FB or later: 230 mA maximum at 5.0 V +5% / -2.5%, 300 mA maximum at 3.3 V +5% / -3% ALG112-FB or later: 490 mA maximum at 5.0 V +5% / - 2.5%, 310 mA maximum at 3.3 V +5% / - 3%		
Power Dissipation within Module	IC695ALG106: 2.97 W maximum with 20 mA inputs on all 6 channels IC695ALG112: 4.89 W maximum with 20 mA inputs on all 12 channels		
Thermal Derating	No derating		
Resolution	16-bit ADC converted to Floating-point or Integer		
Input Data Format	Configurable as floating-point IEEE 32-bit or 16-bit integer in a 32-bit field		
Filter Options	8 Hz, 12 Hz, 16 Hz, 40 Hz, 250 Hz, 1000 Hz		
Input Impedance	>500 kΩ voltage inputs		
Current Input Resistance	250 Ω ±1%		
Open Circuit Detection time	1 second maximum		
Overvoltage	±35 Vdc continuous, maximum		
Overcurrent	±35 mA continuous, maximum		
Normal Mode Noise Rejection in dB		*At 50 Hz*	*At 60 Hz*
	8 Hz filter	90	75
	12 Hz filter	75	80
	16 Hz filter	35	75
Common Mode Noise Rejection	100 dB minimum at 50/60 Hz with 8 Hz filter 100 dB minimum at 50/60 Hz with 12 Hz filter		
Channel-Channel DC Crosstalk	-70 dB minimum		
Isolation Voltage terminal block to backplane/chassis and channel to channel	I-coupler, transformer isolated 250 Vac continuous/1500 Vac for 1 minute		
Analog Step Change Response	The analog input will settle to 0.1% of its final value within 1.7 ms for a step change on the input pins of Module. (Any digital filtering is additional to this time.)		

ALG106/ALG112	Specifications
Digital Filtering Settling Time (ms)	The settling time depends on the configured filter time. 8 Hz Filter: 127 ms 12 Hz Filter: 67 ms 16 Hz Filter: 56 ms 40 Hz Filter: 21 ms 250 Hz Filter: 3.1 ms 1000 Hz Filter: 0 ms (No digital filtering, only the analog front-end filter)
Analog Module Scan Time (ms)	Module provides a new sample every 1 ms, regardless of the digital filtering selected. Refer to the *Digital Filtering Settling Time* for the amount of time required to have settled data.
Calibrated Accuracy[45]	0.1% of range at 25°C 0.2% of range over entire temperature span
Calibration Viability	Factory calibration is valid for 12 months for all ranges and operating conditions.

Indicator Light Emitting Diodes (LEDs): ALG106 & ALG112

MODULE OK — indicates Module's ability to perform normal operations.

LED		Description
	Green, ON	Module OK and configured
or	Green or Amber, slow flashing	Module OK but not configured.
	Green, quick flashing	Error
	OFF	Not OK: no backplane power present or module is defective

FIELD STATUS — indicates the status of Module's field connections.

LED		Description
	Green, ON	No faults on any enabled channel, and Terminal Block is present
	Amber, ON	Fault on at least one channel
	OFF	Terminal block not present or not fully seated

TB — indicates the status of Module's connection to its terminal block.

LED		Description
	Green, ON	Terminal block present
	Red, ON	Terminal block not present or not fully seated
	OFF	No backplane power to module

[45] *In the presence of severe RF interference (IC 801-3, 10V/m), accuracy may be degraded by 2.0% of range,*

9.1.4 Field Wiring: ALG106

Figure 269: Field Wiring ALG106

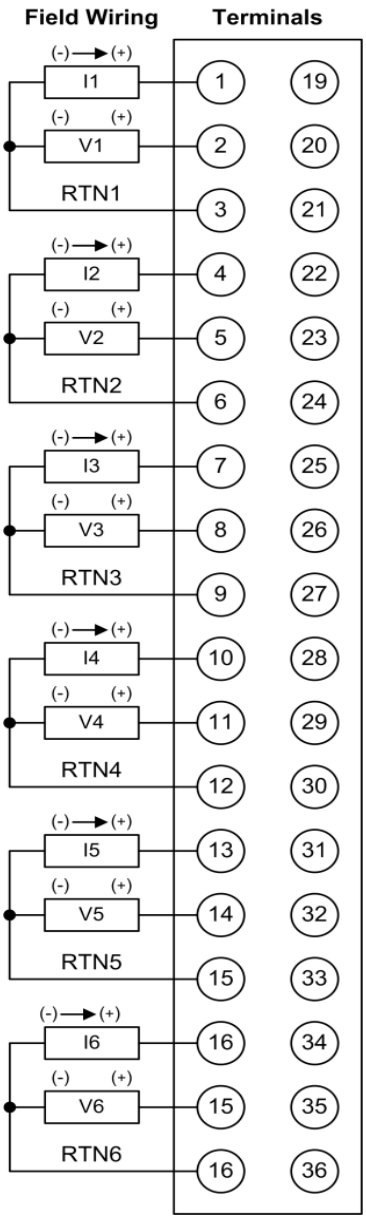

Terminal	Connection	Connection	Terminal
1	CH 1 Current In	No Connection	19
2	CH 1 Voltage In	No Connection	20
3	CH 1 RTN	No Connection	21
4	CH 2 Current In	No Connection	22
5	CH 2 Voltage In	No Connection	23
6	CH 2 RTN	No Connection	24
7	CH 3 Current In	No Connection	25
8	CH 3 Voltage In	No Connection	26
9	CH 3 RTN	No Connection	27
10	CH 4 Current In	No Connection	28
11	CH 4 Voltage In	No Connection	29
12	CH 4 RTN	No Connection	30
13	CH 5 Current In	No Connection	31
14	CH 5 Voltage In	No Connection	32
15	CH 5 RTN	No Connection	33
16	CH 6 Current In	No Connection	34
17	CH 6 Voltage In	No Connection	35
18	CH 6 RTN	No Connection	36

9.1.5 Field Wiring: ALG112

Figure 270: Field Wiring: ALG112

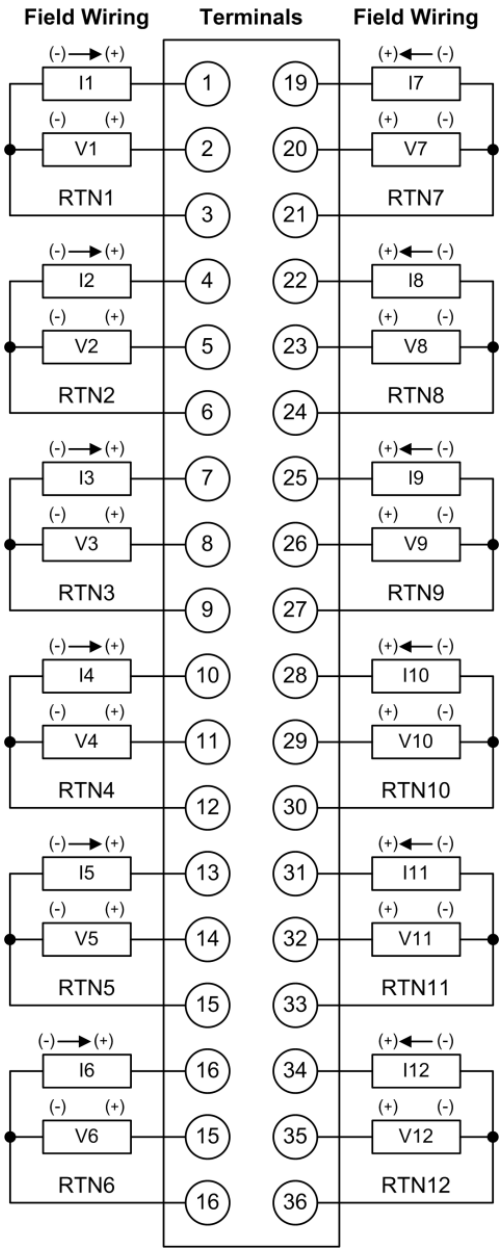

Terminal	Connection	Connection	Terminal
1	CH 1 Current In	CH 7 Current In	19
2	CH 1 Voltage In	CH 7 Voltage In	20
3	CH 1 RTN	CH 7 RTN	21
4	CH 2 Current In	CH 8 Current In	22
5	CH 2 Voltage In	CH 8 Voltage In	23
6	CH 2 RTN	CH 8 RTN	24
7	CH 3 Current In	CH 9 Current In	25
8	CH 3 Voltage In	CH 9 Voltage In	26
9	CH 3 RTN	CH 9 RTN	27
10	CH 4 Current In	CH 10 Current In	28
11	CH 4 Voltage In	CH 10 Voltage In	29
12	CH 4 RTN	CH 10 RTN	30
13	CH 5 Current In	CH 11 Current In	31
14	CH 5 Voltage In	CH 11 Voltage In	32
15	CH 5 RTN	CH 11 RTN	33
16	CH 6 Current In	CH 12 Current In	34
17	CH 6 Voltage In	CH 12 Voltage In	35
18	CH 6 RTN	CH 12 RTN	36

There are no shield terminals on these modules. For shielding, tie cable shields to the ground bar along the bottom of the backplane. M3 tapped holes are provided in the ground bar for this purpose.

Operating Note

These modules have separate enable/disable options for Diagnostic Reporting and Interrupts. Normally, disabling a diagnostic (such as Low/High Alarm or Over/Under range) in the configuration means that its diagnostic bit is never set. However, if interrupts are enabled for a condition and that interrupt occurs, the diagnostic bit for that condition is also set during the same controller logic scan. The next PLC input scan always clears this interrupt status bit back to 0, because Diagnostic Reporting has it disabled.

9.1.7 Configuration: ALG106 & ALG112

Module Parameters: ALG106 & ALG112

Parameter	Default	Description
Channel Value Reference Address	%AIxxxxx	Starting address for the input data of Module. This defaults to the next available %AI block.
Channel Value Reference Length	ALG106: 12 ALG112: 24	The number of words used for the input data of Module.
Diagnostic Reference Address	%Ixxxxx	Starting address for the channel diagnostics status data. This defaults to the next available %I block.
Diagnostic Reference Length	ALG106: 0 or 192 ALG112: 0 or 384	The number of bit reference bits (0 or 192) for the Channel Diagnostics data. Default is 0, which means mapping of Channel Diagnostics is disabled. Change this to 192 / 384 to enable Channel Diagnostics mapping.
Module Status Reference Address	%Ixxxxx	Starting address for the status data of Module. This defaults to the next available %I block.
Module Status Reference Length	0	The number of bits (0 or 32) for Module Status data. Default is 0, which means mapping of Module Status data is disabled. Change this to 32 to enable Module Status data mapping.
I/O Scan Set	1	Assigns Module I/O status data to a scan set defined in the CPU configuration. Determines how often the RX3i polls the data
Inputs Default	Force Off	In the event of module failure or removal, this parameter specifies the state of the Channel Value References. Force Off = Channel Values clear to 0. Hold Last State = Channel Values hold their last state.
Channel Faults w/o Terminal Block	Disabled	Enabled / Disabled: Controls whether channel faults and configured alarm responses will be generated after a Terminal Block removal. The default setting of Disabled means channel faults and alarms are suppressed when the Terminal Block is removed. This parameter does not affect module faults including the Terminal Block loss/add fault generation.
AD Filter Frequency	40 Hz	Can be set to 8, 12, 16, 40, 250, or 1000 Hz.

Channel Parameters: ALG106 & ALG112

Parameter	Default	Description
Range Type	Disabled	Current/Voltage, Disabled
Range	±10 Vdc	±10 Vdc, 0 to +10 Vdc, 0 to +5 Vdc, ±5 Vdc, 1 Vdc to +5 Vdc, ±20 mA, 4 to 20 mA, 0 to 20 mA
Channel Value Format	32-bit Floating Point	16-bit integer or 32-bit floating point
High Scale Value (Eng Units)	The defaults for the four Scaling parameters depend on the configured Range Type and Range. Each Range and Range Type have a different set of defaults.	Note: Scaling is disabled if both High Scale Eng. Units equals High Scale A/D Units and Low Scale Eng. Units equals Low Scale A/D Units. Default is High A/D Limit of selected range type.
Low Scale Value (Eng Units)		Default is Low A/D Limit of selected range type. Must be lower than the high scaling value.
High Scale Value (A/D Units)		Default is High A/D Limit of selected range type. Must be greater than the low scaling value.
Low Scale Value (A/D Units)		Default is Low A/D Limit of selected range type.

Input Scaling: ALG106 & ALG112

By default, Module converts a voltage or current input over the entire span of its configured Range into a floating-point value for the CPU. For example, if the Range of a channel is 4 to 20 mA, Module reports channel input values from 4.000 to 20.000. By modifying one or more of the four channel scaling parameters (Low/High Scale Value parameters) from their defaults, the scaled Engineering Unit range can be changed for a specific application. Scaling can provide inputs to the PLC that are already converted to their physical meaning, or convert input values into a range that is easier for the application to interpret. Scaling is always linear and inverse scaling is possible. All alarm values apply to the scaled Engineering Units value, not to the A/D input value.

The scaling parameters only set up the linear relationship between two sets of corresponding values. They do not have to be the limits of the input.

Example 1

For a voltage input, 6.0 V equals a speed of 20 fps, and 1.0 V equals 0 fps. The relationship in this range is linear. For this example, the input values should represent speed rather than volts. The following channel configuration sets up this scaling:

High Scale Value (Eng Units) = 20.000

Low Scale Value (Eng Units) = 0.000

High Scale Value (A/D Units) = 6.000

Low Scale Value (A/D Units) = 1.000

For this example, 1.0 Vdc to 6.0 Vdc is the normal voltage range, but Module will attempt to scale the inputs for a voltage that lies outside the range. If a voltage of 10.0 Vdc were input to the channel, Module would return a scaled channel value of 36.000. The application should use alarms or take other precautions for scaled inputs that are outside the acceptable range or invalid.

Figure 271: Scaling Example ALG106 or ALG112

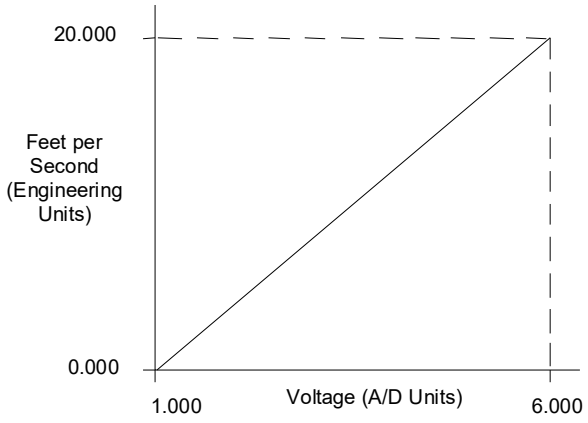

Example 2

An existing application uses traditional analog to digital (A/D) count integer values. With scaling and the 16-bit integer input option, a channel can be configured to report integer count values. In this example, the application should interpret +10 Vdc as 32000 counts and -10 Vdc as -32000 counts. The following channel configuration will scale a ±10 Vdc input channel to ±32000 counts.

Channel Value Format = 16-bit Integer

High Scale Value (Eng Units) = 32000.0

Low Scale Value (Eng Units) = -32000.0

High Scale Value (A/D Units) = 10.000

Low Scale Value (A/D Units) = -10.000

Figure 272: Scaling Example ALG106 or ALG112

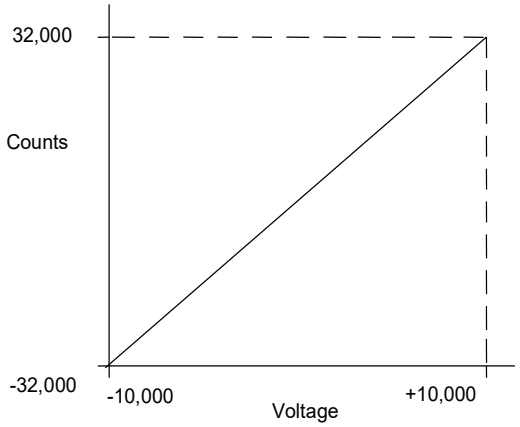

Channel Parameters (Continued)

Parameter	Default	Description
Positive Rate of Change Limit (Eng Units)	0.000	Rate of change in Engineering Units per Second that will trigger a Positive Rate of Change alarm. Default is disabled. Used with “Rate of Change Sampling Rate” parameter.
Negative Rate of Change Limit (Eng Units)	0.000	Rate of change in Engineering Units per Second that will trigger a Negative Rate of Change alarm. Default is disabled. Used with “Rate of Change Sampling Rate” parameter.
Rate of Change Sampling Rate	0.000	Time from 0 to 300 seconds to wait between comparisons. Default of 0.0 is to check after every input sample.

Rate of Change Alarms: ALG106 & ALG112

When either of the Rate of Change parameters is configured to be non-zero, Module takes the difference in Engineering Units between the previous rate of change sample and the current sample, then divides by the elapsed time between samples.

If the Engineering Unit change from the previous sample to current sample is negative, Module compares the rate change with the Negative Rate of Change parameter.

If the Engineering Unit change between samples is positive, Module compares the results in comparing the rate change with the Positive Rate of Change parameter value.

In either case, if the rate of change is greater than the configured rate, a rate of change alarm occurs. The actions taken by Module following the alarm depend on the enabled rate of change actions that have been set up in the "Diagnostic Reporting Enable", "Fault Reporting Enable", and "Interrupts Enabled" parameters.

The Rate of Change Sampling Rate parameter determines how frequently Module compares the Rate of Change. If the Rate of Change Sampling Rate is 0 or any time period less than the channel update rate, Module compares the Rate of Change for every input sample of the channel.

Channel Parameters (Continued)

Parameter	Default	Description
High-High Alarm (Eng Units)	The defaults for the High-High, High, Low, and Low-Low parameters depend on the configured Range Type and Range. Each Range and Range Type has a different set of default values.	Alarms and Deadbands All of the alarm parameters are specified in Engineering Units. To use alarming, the A/D Alarm Mode must also be configured as enabled. High-High Alarm and Low-Low Alarm: When the configured value is reached or passed, a Low-Low Alarm or High-High Alarm is triggered. The configured values must be lower than/higher than the corresponding low/high alarm limits. High Alarm and Low Alarm: When the configured value is reached or below (above), a Low (High) Alarm is triggered. High and Low Alarm Deadbands: A range in Engineering Units above the alarm condition (low deadband) or below the alarm condition (high deadband) where the alarm status bit can remain set even after the alarm condition goes away. For the alarm status to clear, the channel input must fall outside the deadband range. Alarm Deadbands should not cause the alarm clear to be outside the Engineering Unit User Limits range. For example, if the engineering unit range for a channel is -1000.0 to +1000.0 and a High Alarm is set at +100.0, the High Alarm Deadband value range is 0.0 to less than 1100.0. A deadband of 1100.0 or more would put the High Alarm clear condition below –1000.0 units making the alarm impossible to clear within the limits.
High Alarm (Eng Units)		
Low Alarm (Eng Units)		
Low-Low Alarm (Eng Units)		
High-High Alarm Deadband (Eng Units)		
High Alarm Deadband (Eng Units)		
Low Alarm Deadband (Eng Units)		

Using Alarming: ALG106 & ALG112

The Diagnostic Reporting Enable, Fault Reporting Enable, and Interrupt Enable configuration parameters can be used to enable different types of responses for individual channel alarms. By default, all responses are disabled on every channel. Any combination of alarm enables can be configured for each channel.

- If Diagnostic Reporting is enabled, Module reports channel alarms in reference memory at the Diagnostic Reference address corresponding to that channel.
- If Fault Reporting is enabled, Module logs a fault log in the I/O Fault table for each occurrence of a channel alarm.
- If Interrupts are enabled, an alarm can trigger execution of an Interrupt Block in the application program, as explained below.

Channel Parameters (Continued)

Parameter	Default	Description
User Offset	0.000	Engineering Units offset to change the base of the input channel. This value is added to the scaled value on the channel prior to alarm checking.
Software Filter Integration Time (ms)	0.000	If Software Filtering is enabled, the Integration Time parameter specifies the amount of time in milliseconds for the software filter to reach 63.2% of the input value. A value of 0 indicates software filter is disabled. A value of 100 indicates data will achieve 63.2% of its value in 100ms. Default is disabled
Diagnostic Reporting Enable *If Diagnostic Reporting is enabled, the additional parameters listed below can be used to enable specific types of alarms.*	Disabled	Diagnostic Reporting Enable options are used to enable reference memory reporting of alarms into the Diagnostic Reference area. Fault Reporting Enable options enable fault logging of alarms into the I/O Fault Table. Interrupts Enable options enable I/O Interrupt trigger when alarm conditions occur. These parameters enable or disable the individual diagnostics features of a channel. When any of these parameters is enabled, Module uses associated parameters to perform the enabled feature. For example, if Over Range is enabled in the *Diagnostic Reporting Enable* menu, Module will set the Over Range bit in the Diagnostic Reference for the channel. If any of these parameters is disabled, Module does not react to the associated alarm conditions. For example, if Low Alarm Enable is set to Disabled in the *Fault Reporting Enable* menu, the Low Alarm fault is not logged in the I/O Fault Table when Low Alarm is detected on the channel.
Fault Reporting Enable If Fault Reporting is enabled, the additional parameters listed below can be used to enable specific types of Faults.	Disabled	
Interrupts Enable If Interrupts are enabled, the additional parameters listed below can be used to enable specific types of Interrupts.	Disabled	
Low Alarm Enable	Disabled	
High Alarm Enable	Disabled	
Under Range Enable	Disabled	
Over Range Enable	Disabled	
Open Wire Enable	Disabled	
Low-Low Alarm Enable	Disabled	
High-High Alarm Enable	Disabled	
Negative Rate of Change Detection Enable	Disabled	
Positive Rate of Change Detection Enable	Disabled	

Using Interrupts: ALG106 & ALG112

To configure an I/O Interrupt, the Interrupt enable bit or bits must be set in the configuration profile of Module. In addition, the program block that should be executed in response to the channel interrupt must be mapped to the reference address corresponding to that channel.

Example:

In this example, the Channel Values Reference Address block is mapped to %AI0001-%AI0020. An I/O Interrupt block should be triggered if a High Alarm condition occurs on channel 2.

- Configure the High-Alarm condition.
- Set the High-Alarm Interrupt Enable flag for Channel 2 in Module configuration.

The reference address for Channel 2 corresponds to %AI00003 (2 Words per channel), so the interrupt program block Scheduling properties should be set for the "I/O Interrupt" Type and "%AI0003" as the Trigger.

Note on Using Interrupts

This module has separate enable/disable options for Diagnostic Reporting and Interrupts. Normally, disabling a diagnostic (such as Low/High Alarm or Over/Under range) in the configuration means that its diagnostic bit is never set. However, if interrupts are enabled for a condition and that interrupt occurs, the diagnostic bit for that condition is also set during the I/O Interrupt block logic execution. The next PLC input scan always clears this interrupt status bit back to 0, because Diagnostic Reporting has it disabled.

Notes on Over/Under Range, Open Wire, and Terminal Block Removed Affecting Channel Faults and Channel Data

- For under range, open wire, and over range input voltages in excess of +10.5 V, the input data will be clipped to the Low Limit value.
- For over range conditions not exceeding +10.5 V, the input data will be clipped to the High Limit value.
- For an open wire condition or if input voltage exceeds +10.5 V, the Open Wire channel diagnostic data status bit will be set and the Over Range diagnostic data status bit will NOT be set.
- When the terminal block is removed the data reported is the same as an open wire condition. Additionally, the Terminal Block Present bit is cleared in the Module Status Data reference area.
- These modules have separate enable/disable options for Diagnostic Reporting and Interrupts. Normally, disabling a diagnostic (such as Low/High Alarm or Over/Under range) in the configuration means that its diagnostic bit is never set. However, if interrupts are enabled for a condition and that interrupt occurs, the diagnostic bit for that condition is also set during the same controller logic scan. The next PLC input scan always clears this interrupt status bit back to 0, because Diagnostic Reporting has it disabled.
- FW v2.00 and later will not show open-wire faults for 0-20 mA and +/- 20 mA ranges, even when the PME option on “Setting Channel Faults w/o Terminal Block” is enabled and the terminal block is removed. The open circuit fault is only supported on the 4-20 mA range. This is different from previous revision modules (FW v1.xx) which incorrectly did report an open circuit fault for these ranges.

Module Data: ALG106 & ALG112

Module reports its input channel data in its configured input words, beginning at its assigned Channel Value Reference Address. Each channel occupies two words (whether the channel is used or not):

Channel Value Reference Address	Contains this Input
+0, 1	Channel 1
+2, 3	Channel 2
+4, 5	Channel 3
+6, 7	Channel 4
+8, 9	Channel 5
+10, 11	Channel 6
For Module IC695ALG112 Only:	
+12, 13	Channel 7
+14, 15	Channel 8
+16, 17	Channel 9
+18, 19	Channel 10
+20, 21	Channel 11
+22, 23	Channel 12

Depending on its configured Channel Value Format, each enabled channel reports a 32-bit floating-point or 16-bit integer value to the CPU.

In the 16-bit integer mode, the low word of the 32-bit channel data area contains the 16-bit integer channel value. The high word (upper 16-bits) of the 32-bit value is set with the sign extension of the 16-bit integer. This sign-extended upper word allows the 16-bit integer to be read as a 32-bit integer type in logic without losing the sign of the integer. If the 16-bit integer result is negative, the upper word in the 32-bit channel data has the value 0xFFFF. If the 16-bit integer result is positive, the upper word is 0x0000.

Channel Diagnostic Data: ALG106 & ALG112[46]

In addition to the input data from field devices, Module can be configured to report channel diagnostics status data to the CPU. The CPU stores this data at the *Diagnostic Reference Address* configured of Module. Use of this feature is optional.

The diagnostics data for each channel occupies 2 words (whether the channel is used or not):

Diagnostic Reference Address	**Contains Diagnostics Data for:**
+0, 1	Channel 1
+2, 3	Channel 2
+4, 5	Channel 3
+6, 7	Channel 4
+8, 9	Channel 5
+10, 11	Channel 6
For Module IC695ALG112 Only:	
+12, 13	Channel 7
+14, 15	Channel 8
+16, 17	Channel 9
+18, 19	Channel 10
+20, 21	Channel 11
+22, 23	Channel 12

[46] *Whenever the PME option "Sending out Channel Faults while Terminal Block is not installed" is enabled, firmware versions earlier than v2.00 permitted an open wire fault to be generated whenever a terminal block was removed, but additionally did so erroneously for ranges that do not support such a fault: 0-20mA & ±20mA. FW v2.00 and later do not generate open-wire faults for the 0-20mA & ±20mA ranges. Note: the open wire fault is supported on the 4-20mA range only.*

When a diagnostic bit equals 1, the alarm or fault condition is present on the channel. When a bit equals 0 the alarm or fault condition is either not present or detection is not enabled in the configuration for that channel. For each channel, the format of this data is:

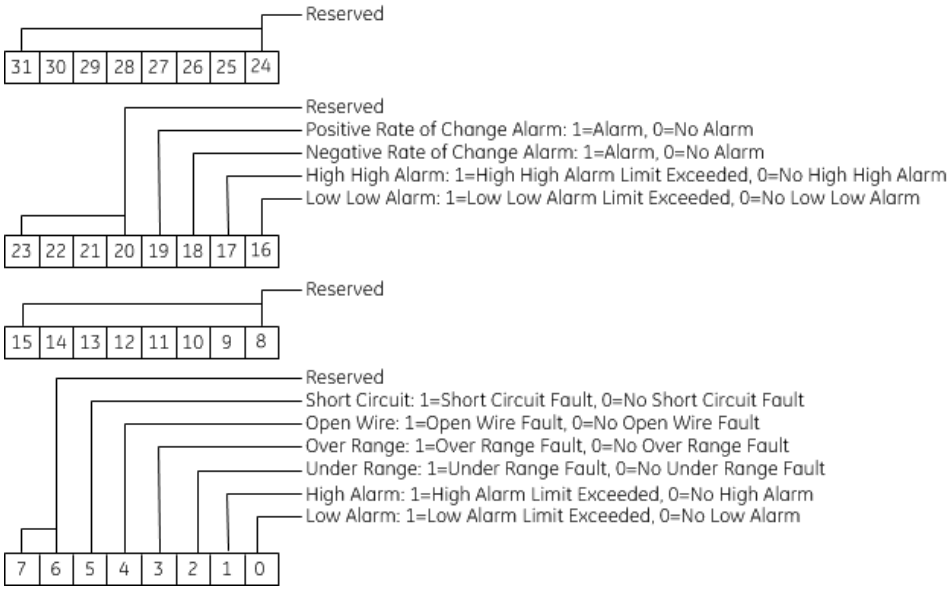

Module Status Data: ALG106 & ALG112

Module can also optionally be configured to return 32 bits of module status data to the CPU. The CPU stores this data in the 32-bit *Module Status Data* reference area configured for Module.

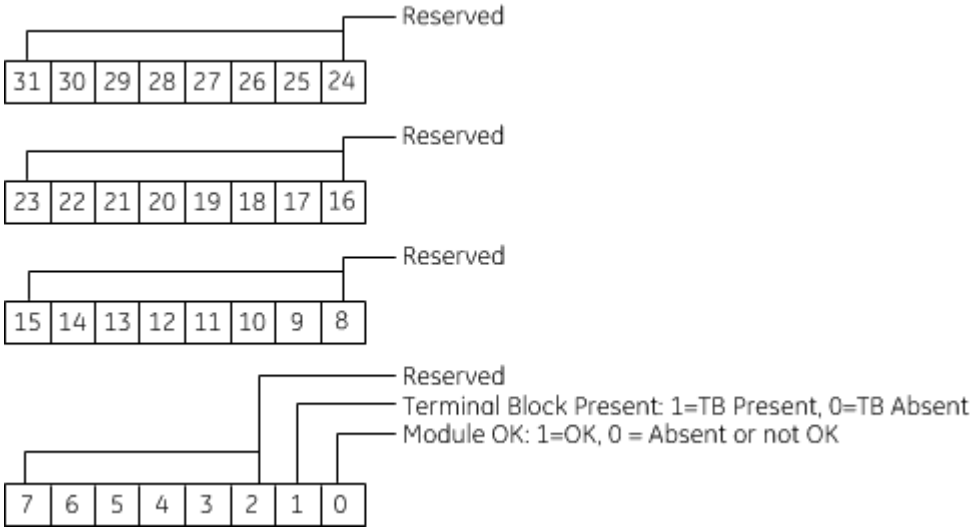

Terminal Block Detection

Module automatically checks for the presence of a Terminal Block.

The TB LED indicates the state of the terminal block of Module. It is green when the Terminal Block is present or red if it is not.

Faults are automatically logged in the CPU I/O Fault table when the terminal block is inserted or removed from a configured module in the system. The fault type is Field Fault and the fault description indicates whether the fault is a "Loss of terminal block" or an "Addition of terminal block". If a Terminal Block is not present while a configuration is being stored, a "Loss of terminal block" fault is logged.

Bit 1 of Module Status Reference indicates the status of the terminal block. To enable Module Status reporting, Module Status Reference must be configured. During operation, the PLC must be in an I/O Enabled mode for the current Module Status to be scanned and updated in reference memory.

9.2 Analog Input Module 4-Channel Differential Voltage: IC694ALG220

Figure 273: IC694ALG220

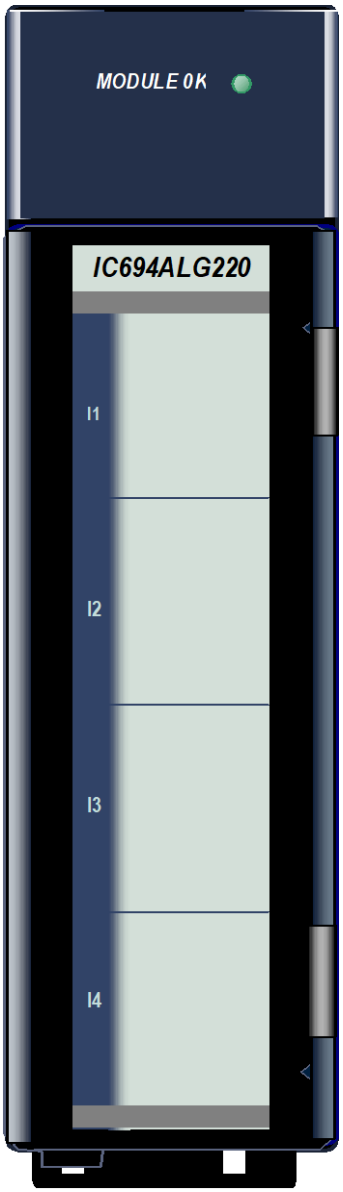

The ***4–Channel Analog Voltage Input*** module, IC694ALG220, provides four analog input channels. This module accepts inputs in the range of -10 to +10 V. Individual channels can be used with 4 to 20 mA inputs by jumpering the input terminals.

Conversion speed for each of the four channels is one millisecond. This provides an update rate of four milliseconds for any channel.

This module can be installed in any I/O slot of an RX3i PLC system.

Module does not support insertion into or removal from an RX3i Universal Backplane which is under power (see *Hot Insertion and Removal Not Supported*).

9.2.1 Isolated +24 Vdc Power

If Module is located in an RX3i Universal Backplane, an external source of Isolated +24 Vdc is required to provide power for Module. The external source must be connected via the TB1 connector on the left side of the backplane.

If this module is located in an Expansion or Remote backplane, the backplane power supply provides the Isolated +24 Vdc output for Module.

9.2.2 LEDs: ALG220

Module **OK** LED is ON when Module power supply is operating.

9.2.1 Specifications: ALG220

ALG220	Specifications
Voltage Range[47]	-10 to +10 Vdc
Calibration	Factory calibrated
Update Rate	4 ms (all four channels)
Resolution	5 mV/20 µA, (1 LSB = 5 mV)
Absolute Accuracy[48]	±10 mV/40 µA (typical) over operating temperature ±30 mV/160 µA (maximum) over operating temperature
Linearity	<1 Least Significant Bit
Isolation, Field to Backplane (optical) and to frame ground	250 Vac continuous; 1500 Vac for 1 minute
Cross–Channel Rejection	> 80 dB
Input Impedance	> 9 MΩ (voltage mode) 250 Ω (current mode)
Input Filter Response	17 Hz
Internal Power Consumption	27 mA from +5 Vdc bus on the backplane 98 mA from the isolated +24 Vdc backplane bus

For product standards and general specifications, refer to Appendix A:.

9.2.2 Data Format: ALG220

Module data is stored in the PLC CPU in 16–bit 2's complement format as displayed in the following figure.

MSB LSB

+/-	10	9	8	7	6	5	4	3	2	1	0	X	X	X	X

[47] *Both inputs must be within ±11 volts of COM, including any noise present on the inputs.*

[48] *In the presence of severe RF interference (IEC 801–3, 10V/m), accuracy may be degraded to ±100 mV/400 µA.*

Scaling and Resolution: ALG220

Module scales input data so that −10 Vdc corresponds to −32000 and +10 Vdc corresponds to +32000. Resolution per bit is 5 mV or 20 mA per bit.

Figure 274: Input Voltage Scaling: ALG220

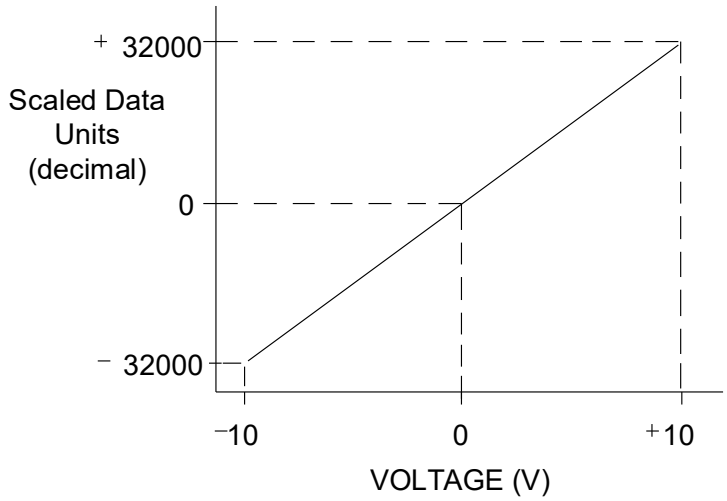

A 4 to 20 mA input corresponds to a 1 to 5 V input to Module; therefore, the resolution of the 4 to 20 mA input signal is approximately 10 bits binary (1 part in 1024). The resolution can be increased to approximately 11 bits (1 part in 2048) by using a precision 250 Ω resistor instead of the jumper. The resistor causes the voltage input module to see a 4 to 20 mA input as 2 to 10 V.

9.2.3 Field Wiring: ALG220

Figure 275: Field Wiring ALG220

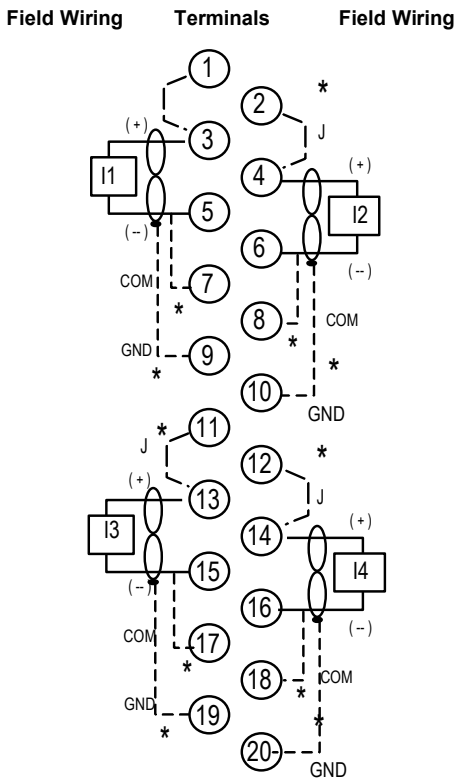

Terminal	Connection
1-3	Current mode input jumper for Channel 1
2-4	Current mode input jumper for Channel 2
3	Channel 1 +
4	Channel 2+
5	Channel 1-
6	Channel 2 -
7	Common
8	Common
9	Shield Termination Point for Channel 1
10	Shield Termination Point for Channel 2
11 - 13	Current mode input jumper for Channel 3
12 - 14	Current mode input jumper for Channel 4
13	Channel 3 +
14	Channel 4+
15	Channel 3-
16	Channel 4 -
17	Common
18	Common
19	Shield Termination Point for Channel 3
20	Shield Termination Point for Channel 4

To minimize the capacitive loading and noise, all field connections to Module should be wired using a good grade of twisted, shielded instrumentation cable. The shields can be connected to either COM or GND. The COM connection provides access to the common of the analog circuitry in Module. The GND connection provides access to the backplane (frame ground). The (-) side of the voltage source can also be tied to the COM terminal if the source is floating to limit common-mode voltages.

The optional jumpers shown can be used to configure a channel for use with 4 to 20 mA inputs. The resolution of 4 to 20 mA inputs can be increased from 10 bits to approximately 11 bits by installing a 250 Ω resistor instead of the jumper Connect the **+** and **-** terminals together

for all unused inputs to minimize any fluctuations in the analog input table for the unused points.

9.3 Analog Input Module 4-Channel Differential Current: IC694ALG221

Figure 276: IC694ALG221

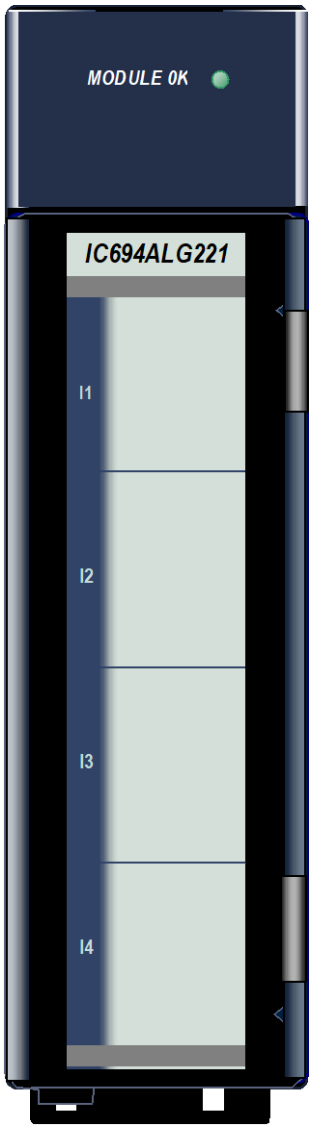

The ***4–Channel Analog Current Input*** module, IC694ALG221, provides four analog input channels. This module has two possible input ranges:

4 to 20 mA
0 to 20 mA

Two range jumpers are provided with Module: one for channels one and two, and the other for channels three and four.

Conversion speed for each of the four channels is one–half millisecond. This provides an update rate of two milliseconds for any channel. Resolution of the converted signal is 12-bit binary (1 part in 4096) over either range.

Input protection for Module is sufficient for operation with reduced performance with up to 200 V common–mode. Module provides electrical isolation of externally generated noise between field wiring and the backplane through the use of optical isolation.

This module can be installed in any I/O slot of an RX3i system.

Module does not support insertion into or removal from an RX3i Universal Backplane which is under power (see *Hot Insertion and Removal Not Supported*).

9.3.1 Isolated +24 Vdc Power

If this module is located in an RX3i Universal Backplane, an external source of Isolated +24 Vdc is required to provide power for the module. The external source must be connected via the TB1 connector on the left side of the backplane. If the module is located in an Expansion or Remote backplane, the backplane power supply provides the Isolated +24 Vdc output for the module.

9.3.2 LEDs: ALG221

Module **OK** LED is ON when Module power supply is operating.

9.3.3 Specifications: ALG221

ALG221	Specifications
Input Current Ranges	4 to 20 mA and 0 to 20 mA
Calibration	Factory calibrated to 4 µA per count
Update Rate	2 milliseconds (all four channels)
Resolution at 4–20 mA	4 µA (1 LSB = 4 µA)
Resolution at 0–20 mA	5 µA (1 LSB = 5 µA)
Absolute Accuracy[49]	0.1% full scale + 0.1% reading
Common Mode Voltage	200 volts
Linearity	< 1 Least Significant Bit
Isolation, Field to Backplane (optical) and to frame ground	250 Vac continuous; 1500 Vac for 1 minute
Common Mode Rejection	> 70 dB at DC; >70 dB at 60 Hz
Cross–Channel Rejection	> 80 dB from DC to 1 kHz
Input Impedance	250 Ω
Input Filter Response	325 Hz
Internal Power Consumption	100 mA from the isolated +24 Vdc supply 25 mA from +5 Vdc bus on the backplane

For product standards and general specifications, refer to Appendix A:.

9.3.4 Data Format: ALG221

Module data is stored in the PLC CPU in 16–bit 2's complement format as displayed in the following figure.

MSB LSB

X	11	10	9	8	7	6	5	4	3	2	1	0	X	X	X

[49] *In the presence of severe RF interference (IEC 801–3, 10V/m), accuracy may be degraded to ±0.5% FS.*

Current Inputs, A/D Data and Scaled Units: ALG221

The default range for each input is 4 to 20 mA, scaled so that 4 mA corresponds to a count of 0 and 20 mA corresponds to a count of 32000 with each 1000 counts representing 0.5 mA.

When a jumper is added to the I/O terminal board, the input range for a PAIR of inputs is changed to 0 to 20 mA. In 0 to 20 mA range, 0 mA corresponds to a count of 0 and 20 mA corresponds to a count of 32000 with each 800 counts representing 0.5 mA.

Figure 277: Input Current Scaling ALG221

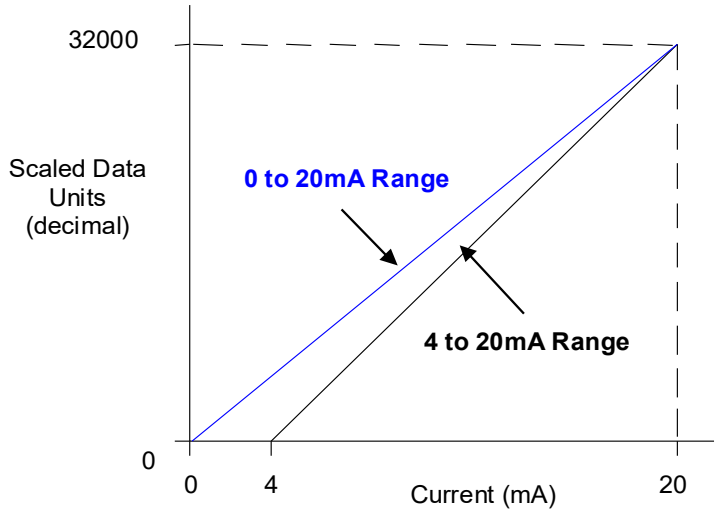

If the current source is reversed into the input or is less than the low end of the current range, Module provides an input data word corresponding to the low end of the current range (0000H in PLC memory). If an input is greater than 20 mA, Module provides an input data value at full scale (7FF8H in PLC memory).

9.3.5 Field Wiring: ALG221

Figure 278: Field Wiring ALG221

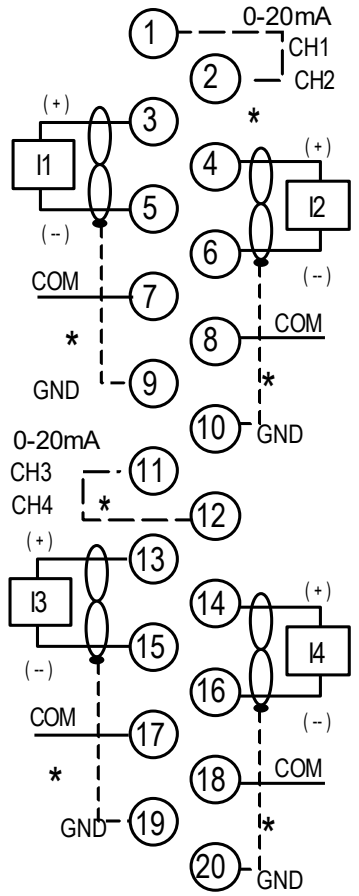

*Optional Connections

Terminal	Connection
1	0-20 mA Jumper for Channels 1 & 2
2	0-20 mA Jumper for Channels 1 & 2
3	Channel 1 +
4	Channel 2+
5	Channel 1-
6	Channel 2 -
7	Common
8	Common
9	Shield Termination Point for Channel 1
10	Shield Termination Point for Channel 2
11	0-20 mA Jumper for Channels 3 & 4
12	0-20 mA Jumper for Channels 3 & 4
13	Channel 3 +
14	Channel 4+
15	Channel 3-
16	Channel 4 -
17	Common
18	Common
19	Shield Termination Point for Channel 3
20	Shield Termination Point for Channel 4

To minimize the capacitive loading and noise, all field connections to Module should be wired using a good grade of twisted, shielded instrumentation cable. The shields can be connected to either COM or GND. The COM connection provides access to the common of the analog circuitry in Module. The GND connection provides access to the Backplane (frame ground).

To limit common–mode voltages, each current source common line may also be tied to its associated COM terminal if the source is floating. These optional connections are shown above.

9.4 Analog Input Module 16-/8-Channel Voltage: IC694ALG222

Figure 279: IC694ALG222

The ***16–Channel Analog Voltage Input*** Module, IC694ALG222, provides sixteen single-ended or eight differential input channels. Each channel can be configured using the configuration software for either of two input ranges:

- 0 to 10 V (unipolar), default
- -10 to +10 V (bipolar)

High and Low alarm limits can be configured for both ranges.
This module can be installed in any I/O slot of an RX3i system.
Revision –BA and later supports insertion into and removal from an RX3i Universal Backplane which is under power. Refer to Section 2.6.4, *Hot Insertion and Removal*.
Module supports firmware upgrades using the WinLoader software utility (if the host CPU has a serial port) or using a Web-based tool (if the host CPU has no serial port). Instructions are included with the firmware upgrade kit.[25]

9.4.1 Isolated +24 Vdc Power

If Module is located in an RX3i Universal Backplane, an external source of Isolated +24 Vdc is required to provide power for Module. The external source must be connected via the TB1 connector on the left side of the backplane.
If this module is located in an Expansion or Remote backplane, the backplane power supply provides the Isolated +24 Vdc for Module.

9.4.2 LEDs: ALG222

Module **OK** LED provides module status information on power-up:

- *ON*: status is OK, module configured
- *OFF*: no backplane power or software not running (watchdog timer timed out)
- *Continuous rapid flashing*: configuration data not received from CPU
- *Slow flashes, then OFF*: failed power-up diagnostics or encountered code execution error

Module **P/S** LED indicates that the internally generated +5 Vdc supply is above a minimum designated level for Module.

9.4.4 Specifications: ALG222

ALG222	Specifications
Number of Channels	1 to 16 selectable, single-ended 1 to 8 selectable, differential
Input Voltage Ranges	0 Vdc to +10 Vdc (unipolar) or -10 Vdc to +10 Vdc (bipolar); selectable each channel
Calibration	Factory calibrated to: 2.5 mV per count on 0 V to +10 V (unipolar) range 5 mV per count on -10 to +10 V (bipolar) range
Update Rate	Single-Ended Input Update Rate: 5 ms Differential Input Update Rate: 2 ms
Resolution at 0V to +10 Vdc	2.5 mV (1 LSB = 2.5 mV)
Resolution at -10 Vdc to +10 Vdc	5 mV (1 LSB = 5 mV)
Absolute Accuracy[50,51]	±0.25% of full scale at 25°C (77°F) ±0.5% of full scale over specified operating temperature range
Linearity	< 1 LSB
Isolation, Field to Backplane (optical) and to frame ground	250 Vac continuous; 1500 Vac for 1 minute
Common Mode Voltage (Differential)[52]	±11 V (bipolar range)
Cross-Channel Rejection	> 70 dB from DC to 1 kHz
Input Impedance	>500 kΩ (single-ended mode) >1 MΩ (differential mode)
Input Filter Response	23 Hz (single-ended mode) 57 Hz (differential mode)
Internal Power Consumption	112 mA (maximum) from the backplane +5 Vdc bus IC694ALG222-BA and later: 110 mA (maximum) from the isolated +24 Vdc supply IC694ALG222-AA: 41 mA (maximum) from the isolated +24 Vdc supply

For product standards and general specifications, refer to Appendix A:.

[50] *In the presence of severe Radiated RF interference (IEC 61000-4-3, 10V/m), accuracy may be degraded to ±5% of full scale.*
[51] *In the presence of severe Conducted RF interference (IEC 61000-4-6, 10Vrms), accuracy may be degraded to ±1% of full scale.*
[52] *The sum of the differential input, common-mode voltage, and noise must not exceed ±11 volts when referenced to COM.*

9.4.5 Configuration: ALG222

Configurable parameters for module IC694ALG222 are described below.

Module Settings: ALG222

Parameter	Choices	Description
Active Channels	1 to 16 for Single-ended mode, or 1 to 8 for Differential mode	The number of channels to be scanned. Channels are scanned in sequential, contiguous order.
Mode	Single-ended (default), or Differential	In Single-ended mode, there are 16 inputs referenced to a single common. In Differential mode, each of the 8 inputs has its own signal and common.
Channel Value Reference Address	Valid memory type: %AI	The starting address for input data from Module.
Channel Value Reference Length	Read-only.	Each channel provides 16 bits (1 word) of analog input data to the Controller CPU.
Module Status Reference Address	Valid memory type: %I	The starting address for status information from Module.
Module Status Reference Length	0, 8, 16, 24, 32, 40	The number of status bits (0 to 40) reported to the Controller. When set to 0, status reporting is disabled. To enable status reporting, set this parameter to a value other than 0. Data formats are shown on the following page.
I/O Scan Set	1 through 32	Assigns Module I/O status data to a scan set defined in the CPU configuration. Determines how often the RX3i polls the data

Input Channel Parameters: ALG222

Parameter	Choices	Description
Voltage	0 to 10 Vdc (default) or -10 Vdc to 10 Vdc	In the 0 to 10 Vdc default range, input voltage values from 0 to 10 Vdc Module reports 0 to 32,000 integer values to the CPU. In the -10 to 10 Vdc range, input voltage values from -10 to 10 Vdc, Module reports-32,000 to 32,000 integer values to the CPU.
Alarm Low (Engineering Units)	0 to 10 Vdc Range = 0 to 32760 -10 Vdc to 10 Vdc Range = -32767 to 32752	Each channel can be assigned a low alarm limit alarm. Values entered without a sign are assumed to be positive. Be sure the alarm low values are appropriate for the selected range.
Alarm High (Engineering Units)	0 to 10 Vdc Range = 0 to 32760	Each channel can be assigned a high alarm limit. Values entered without a sign are assumed to be

	-10 Vdc to 10 Vdc Range = -32767 to 32752	positive. Be sure the alarm high values are appropriate for the selected range.

Input Scaling: ALG222

The default input mode and range are single-ended, unipolar.
In 0 to 10 Vdc mode, input data is scaled so that 0 V corresponds to a count of 0 and 10 V corresponds to a count of +32000.

The bipolar range and mode can be selected by changing the configuration parameters of Module. In bipolar mode, -10 V corresponds to a count of -32000, 0 V corresponds to a count of 0, and +10 V corresponds to a count of +32000.

Factory calibration adjusts the analog value per bit (resolution) to a multiple of full scale (2.5 mV per bit for unipolar; 5 mV per bit for bipolar). The data is then scaled with the 4000 counts over the analog range. The data is scaled as displayed in the following figure.

Figure 280: Input Scaling ALG222

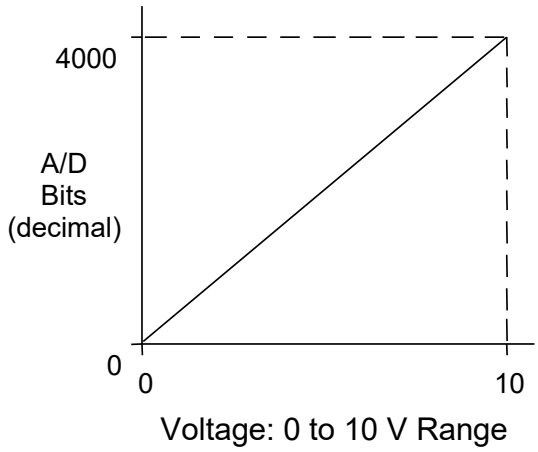

9.4.6 Data Format: ALG222

The 12-bit resolution module analog input data is stored in the PLC CPU in 16–bit 2's complement format in the unipolar range as displayed in the following figure.

MSB LSB

X	11	10	9	8	7	6	5	4	3	2	1	0	X	X	X

Status Data: ALG222

Analog Module IC694ALG222 can be configured to return 8, 16, 24, 32, or 40 status bits to the PLC CPU. This status data provides the following information about module operation:

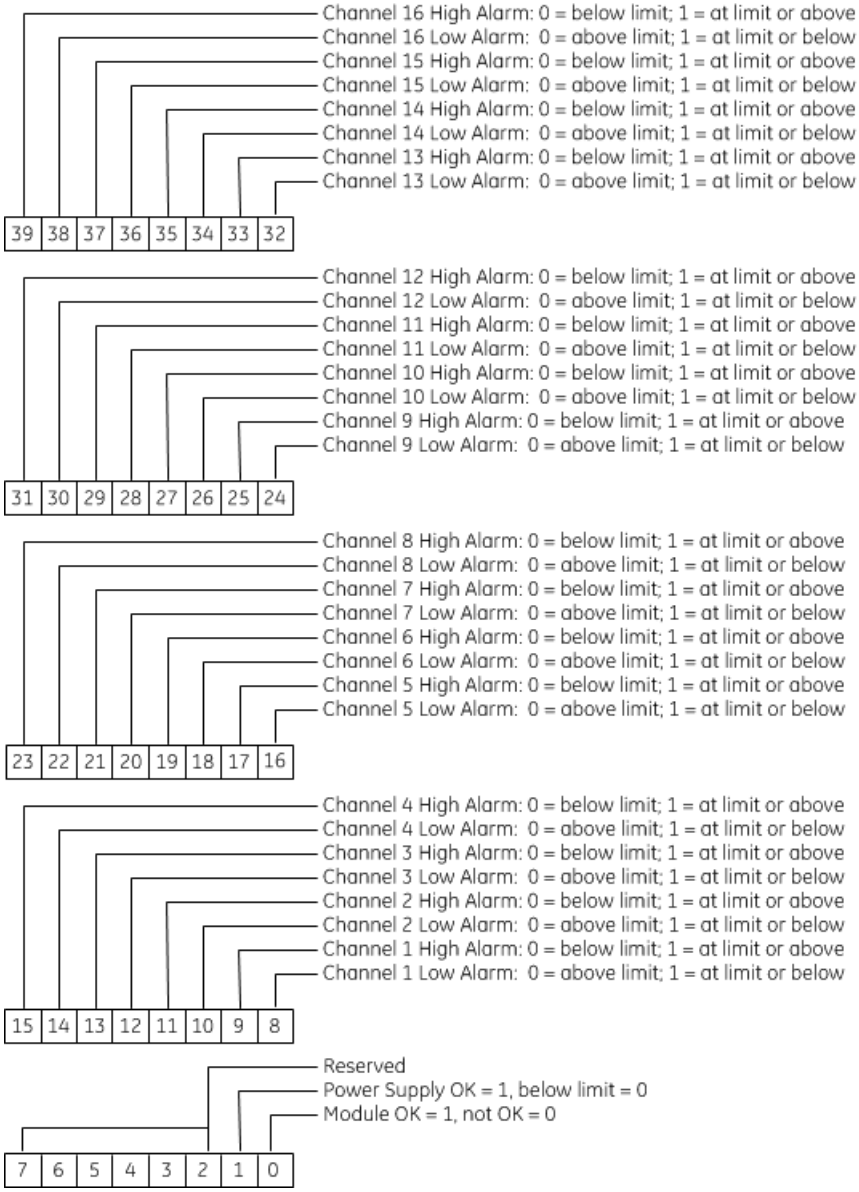

9.4.7 Field Wiring: ALG222

Terminal	Single-ended Mode	Differential Mode
1, 2	not used	
3	Channel 1	Channel 1 +
4	Channel 2	Channel 1 -
5	Channel 3	Channel 2 +
6	Channel 4	Channel 2 -
7	Channel 5	Channel 3 +
8	Channel 6	Channel 3 -
9	Channel 7	Channel 4 +
10	Channel 8	Channel 4 -
11	Channel 9	Channel 5 +
12	Channel 10	Channel 5 -
13	Channel 11	Channel 6 +
14	Channel 12	Channel 6 -
15	Channel 13	Channel 7 +
16	Channel 14	Channel 7 -
17	Channel 15	Channel 8 +
18	Channel 16	Channel 8 -
19	Common	Common
20	Ground	Ground

Connections for 16-channel single-ended mode are displayed in Figure 281 and for the 8-channel differential mode in Figure 282. Single-ended mode is the default operating mode for Module. Differential mode must be set up by configuration.

16 Single-ended Channels

Figure 281: Field Wiring Single-Ended ALG222

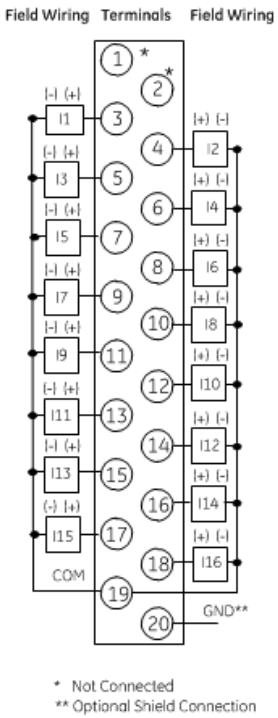

8 Differential Channels

Figure 282: Field Wiring Differential ALG222

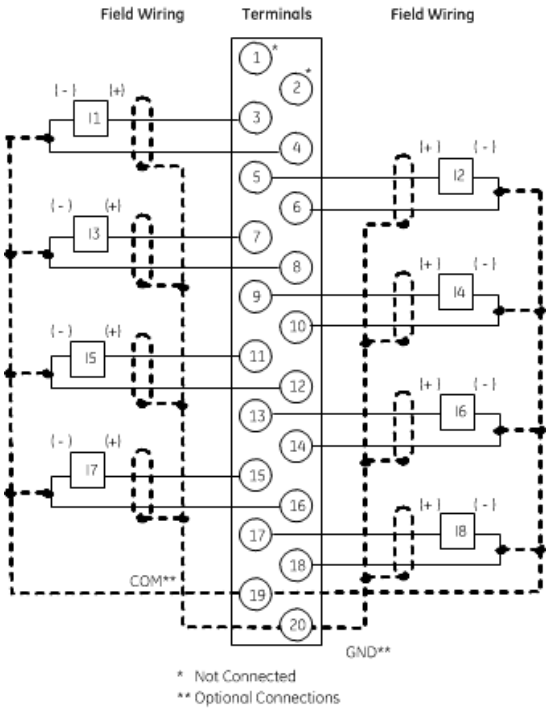

9.5 Analog Input Module 16-Channel Current: IC694ALG223

Figure 283: IC694ALG223

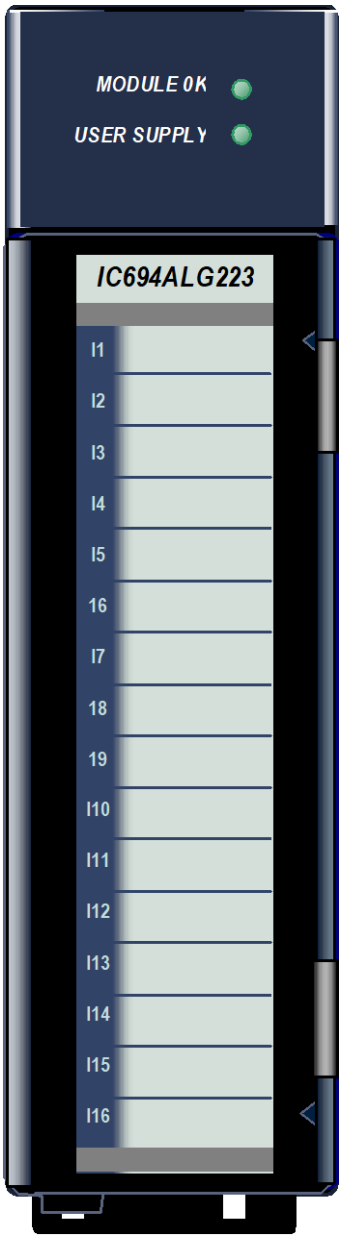

The ***16-Channel Analog Current Input*** module, IC694ALG223, provides sixteen single-ended inputs. Each input can be configured using the configuration software for any of three input ranges:

- 4 to 20 mA
- 0 to 20 mA
- 4 to 20 mA Enhanced

High and Low alarm limits are available on all ranges. In the 4 to 20 mA Enhanced range, a low alarm limit can be set up to detect input current from 4 to 0 mA, providing open-wire fault detection in 4 to 20 mA applications.
Module also reports module status and external power supply status to the CPU using its assigned program reference addresses.
This module can be installed in any I/O slot in an RX3i system.
Revision –BA and later supports insertion into and removal from an RX3i Universal Backplane which is under power. Refer to Section 2.6.4, *Hot Insertion and Removal*.
Module supports firmware upgrades using the WinLoader software utility (if the host CPU has a serial port) or using a Web-based tool (if the host CPU has no serial port). Instructions are included with the firmware upgrade kit.[25]

9.5.1 Module Power

This module consumes 120 mA from the 5 Vdc bus on the PLC backplane. It also requires 65 mA from a user-supplied +24 Vdc supply, which must also supply current for each current loop employed.

9.5.2 LEDs: ALG223

Module **OK** LED provides module status information on power-up as follows:

- **ON:** status is OK, module configured;
- **OFF:** no backplane power or software not running (watchdog timer timed out);
- **Continuous rapid flashing:** configuration data not received from CPU;
- **Slow flashes, then OFF:** failed power-up diagnostics or encountered code execution error.

The **User Supply** LED indicates that the external 24 Vdc supply is within specifications.

9.5.3 Specifications: ALG223

ALG223	Specifications
Number of Channels	1 to 16 selectable; single-ended
Input Current Ranges	0 to 20 mA, 4 to 20 mA and 4 to 20 mA Enhanced (selectable per channel)
Calibration	Factory calibrated to: 4 µA per count on 4 to 20 mA range 5 µA per count on 0 to 20 mA and 4 to 20 mA Enhanced range
Update Rate	Update Rate: 6 ms
Resolution at 4–20 mA	4 µA (4 µA/bit)
Resolution at 0–20 mA	5 µA (5 µA/bit)
Resolution at 4–20 mA Enhanced	5 µA (5 µA/bit)
Absolute Accuracy[53]	±0.25% of full scale at 25°C (77°F): ± 0.5% of full scale over specified operating temperature range
Linearity	< 1 LSB from 4 to 20 mA (4 to 20 mA range) < 1 LSB from 100 µA to 20 mA (0 to 20 mA and 4 to 20 mA Enhanced ranges)
Isolation, Field to Backplane (optical) and to frame ground	250 Vac continuous; 1500 Vac for 1 minute
Common Mode Voltage[54]	0 volts (single-ended channels)
Cross–Channel Rejection	> 70 dB from DC to 1 kHz
Input Impedance	250 Ω
Input Low Pass Filter Response	19 Hz
External Supply Voltage Range	20 to 30 Vdc
External Supply Voltage Ripple	10%
Internal Power Consumption	120 mA from the +5 Vdc bus on the backplane 65 mA from 24 Vdc external user power supply (in addition to current loop currents)

For product standards and general specifications, refer to Appendix A:.

[53] *In the presence of severe Radiated RF interference (IEC 61000-4-3, 10V/m), accuracy may be degraded to ±5% of full scale.*

[54] *In the presence of severe Conducted RF interference (IEC 61000-4-6, 10Vrms), accuracy may be degraded to ±1% of full scale.*

9.5.4 Configuration: ALG223

Module Settings: ALG223

Parameter	Choices	Description
Active Channels	1 to 16	The number of channels to be scanned. Channels are scanned in sequential, contiguous order.
Channel Value Reference Address	Valid memory type: %AI	The starting address for input data from Module.
Channel Value Reference Length	Read-only.	Each channel provides 16 bits (1 word) of analog input data to the Controller CPU.
Module Status Reference Address	Valid memory type: %I	The starting address for status information from Module.
Module Status Reference Length	0, 8, 16, 24, 32, 40	The number of status bits (0 to 40) reported to the Controller CPU. When set to 0, status reporting is disabled. To enable status reporting, set this parameter to a value other than 0. Data formats are shown on the following page.
I/O Scan Set	1 through 32	Assigns Module I/O status data to a scan set defined in the CPU configuration. Determines how often the RX3i polls the data

Input Channel Parameters: ALG223

Parameter	Choices	Description
Range	4-20 mA (default), 0-20 mA, or 4-20 mA enhanced	In the 4 to 20 mA range, input currents from 4 to 20 mA are reported to the CPU as values from 0 to 32000 units. In the 0 to 20 mA range, input currents from 0 to 20 mA are reported to the CPU as values from 0 to 32000 units. In the 4 to 20 mA enhanced range, currents from 4 to 20 mA are reported to the CPU as values from 0 to 32000 units. Currents below 4 mA are reported as negative values with 0 represented as –8000 units.
Alarm Low (Engineering Units)	4-20 mA = 0 to 32759	Each channel can be assigned a low alarm limit alarm. Values entered without a sign are assumed to be positive. Be sure the alarm low values are appropriate for the selected range.
	0-20 mA = 0 to 32759	
	4-20 mA enhanced = -8000 to +32759	
Alarm High (Engineering Units)	4-20 mA = 1 to 32760	Each channel can also be assigned a high alarm limit. Values entered without a sign are assumed to be positive. Be sure the alarm high values are appropriate for the selected range.
	0-20 mA = 1 to 32760	
	4-20 mA enhanced = -7999 to +32760	

Input Scaling: ALG223

In the 4 to 20 mA range, input data is scaled so that 4 mA corresponds to a count of 0 and 20 mA corresponds to a count of 32000.

In the 0 to 20 mA range, 0 mA corresponds to a count of 0 and 20 mA corresponds to a count of 32000. Full 12–bit resolution is available over the 4 to 20 mA and 0 to 20 mA ranges.

4 to 20 mA Enhanced range can also be configured. In that range, 0 mA corresponds to a count of -8000, 4 mA corresponds to a count of 0 (zero) and 20 mA corresponds to a count of +32000. A low alarm limit can be set up to detect input current from 4 mA to 0 mA, providing open-wire fault detection in 4 to 20 mA applications.

Analog values are scaled over the range of the converter. Factory calibration adjusts the analog value per bit (resolution) to a multiple of full scale (4 µA/bit). This calibration leaves a normal 12–bit converter with 4000 counts (normally 2^{12} = 4096 counts). The data is then scaled with the 4000 counts over the analog range. The data is scaled as displayed in the following figure.

Figure 284: Input Scaling ALG223

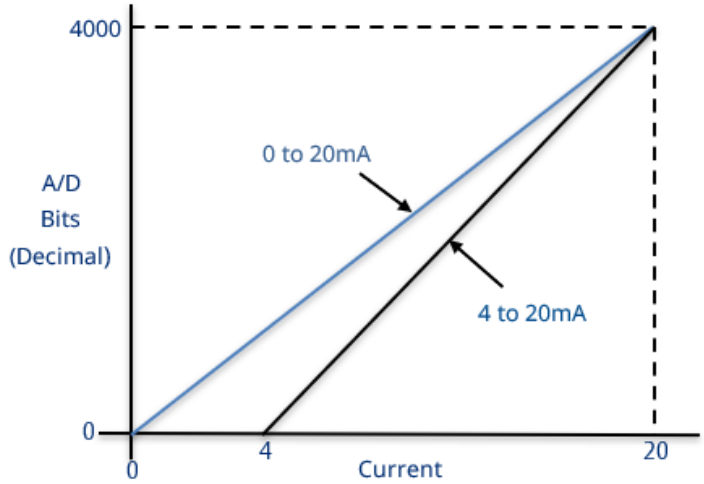

9.5.5 Data Format: ALG223

The 12-bit resolution module analog input data is stored in the PLC CPU in 16–bit 2's complement format as displayed in the following figure.

MSB LSB

X	11	10	9	8	7	6	5	4	3	2	1	0	X	X	X

Status Data: ALG223

Analog Module IC694ALG223 can be configured to return 8, 16, 24, 32, or 40 status bits to the PLC CPU. This status data provides the following information about module operation:

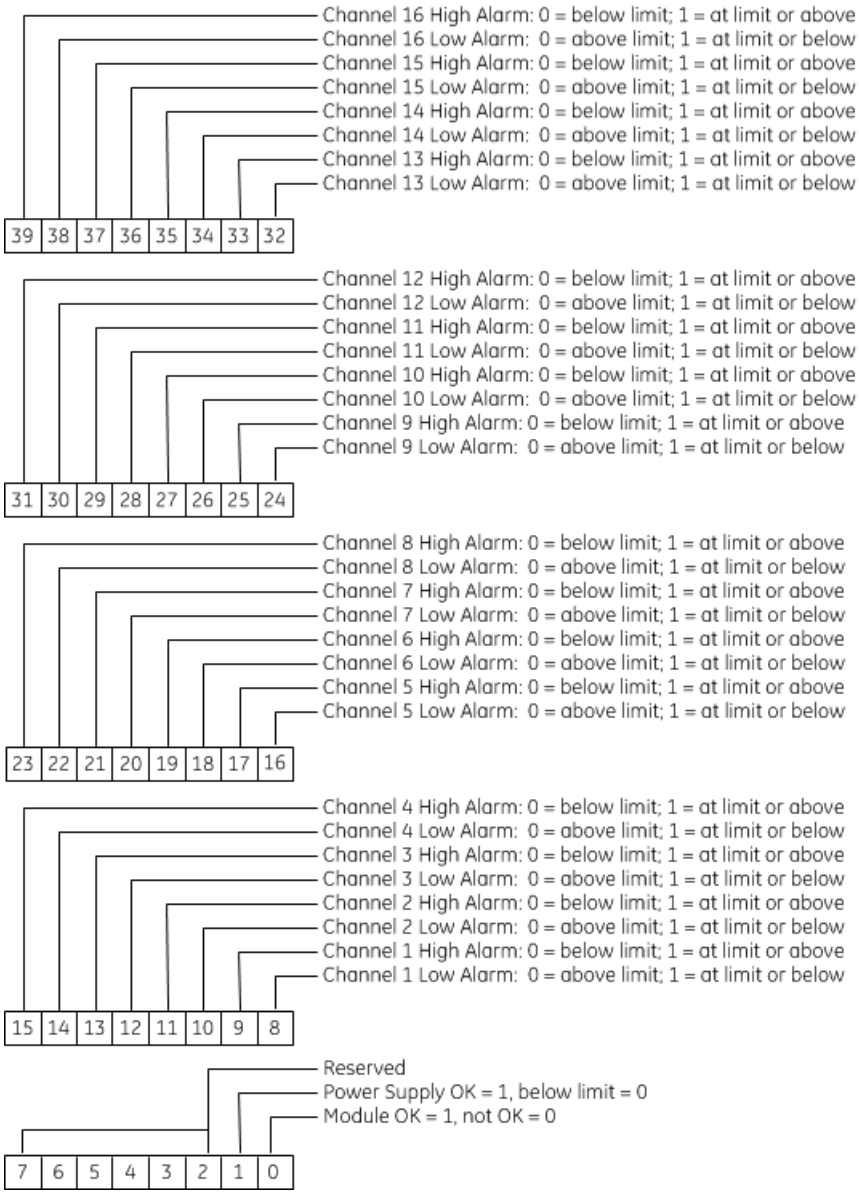

9.5.6 Field Wiring: ALG223

Figure 285: Field Wiring ALG223

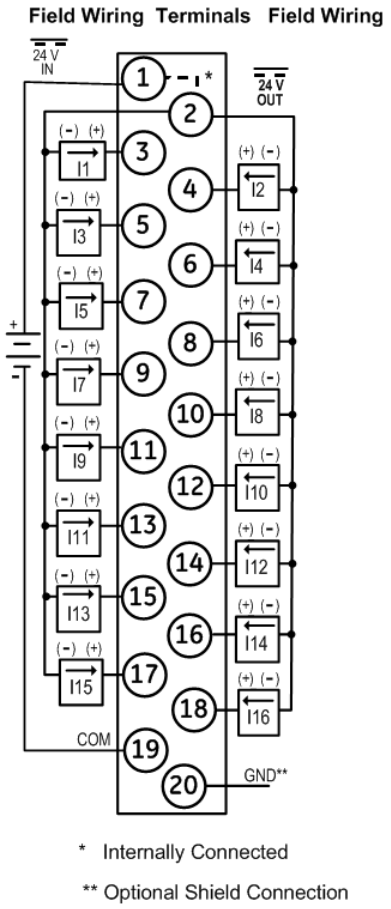

Terminal	Connection
1	User-supplied 24 V Input; provides loop power via 24 V_{OUT} terminal (pin 2)
2	+24 V loop power tie point
3	Current Input, Channel 1
4	Current Input, Channel 2
5	Current Input, Channel 3
6	Current Input, Channel 4
7	Current Input, Channel 5
8	Current Input, Channel 6
9	Current Input, Channel 7
10	Current Input, Channel 8
11	Current Input, Channel 9
12	Current Input, Channel 10
13	Current Input, Channel 11
14	Current Input, Channel 12
15	Current Input, Channel 13
16	Current Input, Channel 14
17	Current Input, Channel 15
18	Current Input, Channel 16
19	Common connection to input current sense resistors; user-supplied 24 V input return or 24 V_{IN} return
20	Frame ground connections for cable shields

Figure 286: Connection Example 1

ALG222

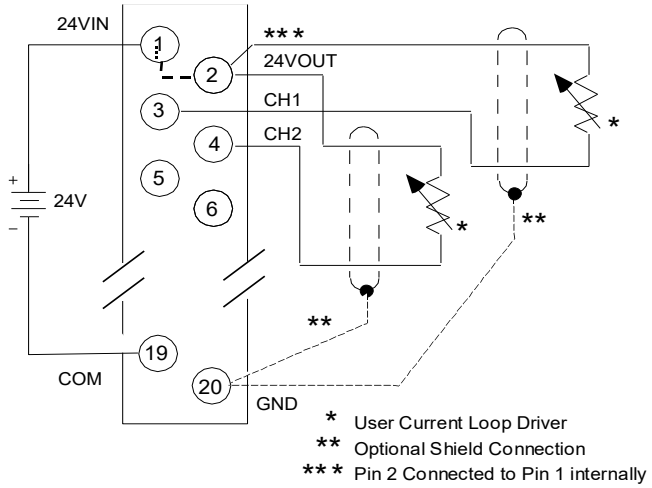

Figure 287: Connection Example 2

ALG222

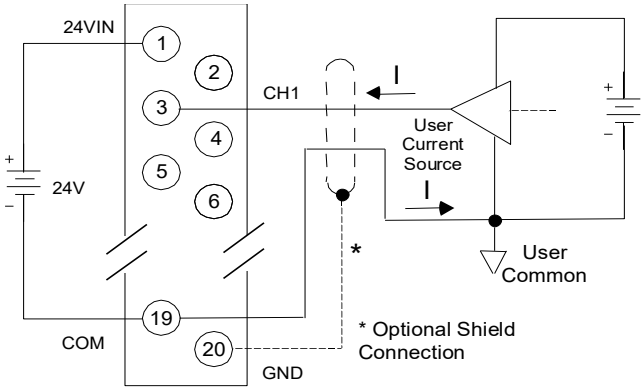

To limit common-mode voltages, the current source can be tied to the COM terminal provided the source is floating.

9.6 Analog Input module Advanced Diagnostics 16-Channel Voltage: IC694ALG232

Figure 288: IC694ALG232

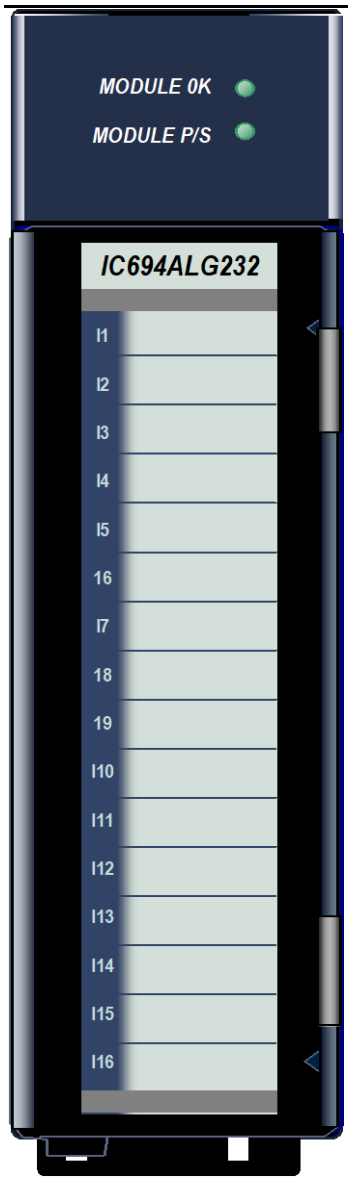

The PACSystems RX3i 8/16-Channel Analog Voltage Input module, IC694ALG232, provides 16 single-ended or 8 differential input channels. Each channel can be configured for either of two input ranges:

- 0 to 10 V (unipolar), default
- -10 to +10 V (bipolar)

High and Low alarm limits can be configured for both ranges. This module can be installed in any I/O slot that has a serial connector in an RX3i system.

9.6.1 Features

- Isolated +24 Vdc Power
- Completely software-configurable, no module jumpers to set
- Configurable scaling and offsets per channel
- High alarm, low alarm, high-high alarm, low-low alarm detection and reporting selectable per channel
- Module fault reporting
- Supports diagnostic point fault contacts in the logic program
- Positive and negative Rate of Change Alarms
- Display of module serial number, revision and date code in programming software.
- Module supports insertion into and removal from an RX3i Universal Backplane which is under power. Refer to Section 2.6.4, *Hot Insertion and Removal*.
- Module supports firmware upgrades using the WinLoader software utility (if the host CPU has a serial port) or using a Web-based tool (if the host CPU has no serial port). Instructions are included with the firmware upgrade kit.[25]

9.6.2 Isolated +24 Vdc Power

If Module is located in an RX3i Universal Backplane, an external source of isolated +24 Vdc is required to provide power for Module. The

external source must be connected via the TB1 connector on the left side of the backplane.

If this module is located in an Expansion or Remote backplane, the backplane power supply provides the Isolated +24 Vdc for Module.

9.6.3 LEDs: ALG232

Module **OK** LED provides module status information as follows:

- **ON**: status is **OK**, module configured
- **OFF**: no backplane power or software not running (watchdog timer timed out)
- **Continuous rapid blinking**: configuration data not received from CPU
- **Slow blinking**, **then OFF**: failed power-up diagnostics or encountered code execution error

Module **P/S LED** indicates that the internally generated +5 Vdc supply is above a minimum designated level for Module.

9.6.4 Specifications: ALG232

ALG232	Specifications
Number of Channels	1 to 16 selectable, single-ended input mode 1 to 8 selectable, differential input mode
Input Ranges	0 Vdc to +10 Vdc (unipolar) or -10 Vdc to +10 Vdc (bipolar); selectable each channel
Calibration	Factory calibrated to: 0.3125 mV per count on 0 Vdc to +10 Vdc (unipolar) range 0.3125 mV per count on -10 to +10 Vdc (bipolar) range
Update Rate for All Channels	Single Ended Input 5 ms Differential Input 3 ms
Resolution at 0 Vdc to +10 Vdc	1 LSB = 0.3125 mV
Resolution at -10 Vdc to +10 Vdc	1 LSB = 0.3125 mV
Absolute Accuracy[55,56]	±0.25% of full scale at 25°C (77°F) ±0.5% of full scale over specified operating temperature range
Linearity	< 4 LSB
Isolation, Field to Backplane (optical) and to frame ground	250 Vac continuous; 1500 Vac for 1 minute
Common Mode Voltage (Differential)[57]	±11 Vdc (bipolar range)
Cross-Channel Rejection	> 70 dB from DC to 1 kHz
Input Impedance	>500 kΩ (single-ended mode) >1 MΩ (differential mode)
Input Filter Response	23 Hz (single-ended mode) 38 Hz (differential mode)
Internal Power Consumption	112 mA (maximum) from the backplane +5 Vdc bus 110 mA (maximum) from the backplane isolated +24 Vdc supply

For product standards and general specifications, refer to Appendix A:.

[55] *In the presence of severe Radiated RF interference (IEC 61000-4-3, 10V/m), accuracy may be degraded to ±5% of full scale.*
[56] *In the presence of severe Conducted RF interference (IEC 61000-4-6, 10Vrms), accuracy may be degraded to ±1% of full scale.*
[57] *The sum of the differential input, common mode voltage, and noise must not exceed ±11 volts when referenced to COM.*

9.6.5 Configuration: ALG232

Module Parameters: ALG232

Parameter	Choices	Description
Active Channels	1 to 16 for Single-ended Input Mode, or 1 to 8 for Differential Input Mode	The number of channels to be scanned. Channels are scanned in sequential, contiguous order.
Channel Value Reference Address	Valid memory types: %AI (default), %AQ, %R, %W, Symbolic Memory*	The starting address in memory for input data from Module. * Note: To support Symbolic Memories, the "Variable Mode" property should be enabled in PME.
Channel Value Reference Length	Read-only	Depends on the number of active channels. Each channel provides two words of analog input data to the Controller CPU.
Diagnostic Reference Address	Valid memory types: %I (default), %Q, %G, %M, %T, Symbolic Memory*	Starting address for the channel diagnostics data. Used only when Module Level Diagnostic Reporting is enabled. * Note: To support Symbolic Memories, the "Variable Mode" property should be enabled in PME
Diagnostic Reference Length	Read-only	The amount of memory required for the channel diagnostics data. When Module Level Diagnostic Reporting is enabled, 32 bits (2 words) of diagnostic data are allocated for each active channel.
Module Status Reference Address	Valid memory types: %I (default), %Q, %G, %M, %T, Symbolic Memory*	The starting address in memory for status information from Module. * Note: To support Symbolic Memories, the "Variable Mode" property should be enabled in PME
Module Status Reference Length	0, 32	The number of module status bits reported to the CPU. Data format is displayed in the following figure. When set to 0, status reporting is disabled. To enable status reporting, set this parameter to a value other than 0.
I/O Scan Set	1 through 32	Assigns Module I/O status data to a scan set defined in the CPU configuration. Determines how often the RX3i polls the data
Inputs Default	Force Off (default) or Hold Last State	In the event of module failure or removal, this parameter specifies the state of all Channel Value References for Module. Force Off = Channel Values clear to 0. Hold Last State = Channels hold their last state.
Analog Input Mode	Single-Ended Input Mode (default), or Differential Input Mode	In Single-Ended Input Mode, 16 inputs are referenced to a single common. In Differential Input Mode, each of the 8 inputs has its own signal and common. Selection must match the input wiring to Module.
Module Level Diagnostic Reporting	Disabled (default) or Enabled	If enabled, 32 bits of data are allocated for each active channel. Diagnostic Reporting and Fault Reporting can be enabled separately for each channel.

Channel Configuration Parameters: ALG232

Parameter	Choices	Description
Range	0 to 10 V (default) or -10 to 10 V	In the 0 to 10 V default range, input voltage values from 0 to 10 V report 0 to 32,000 integer values to the CPU. In the -10 to 10 V range, input voltage values from -10 to 10 V report -32000 to 32,000 integer values to the CPU.
Channel Value Format	32-bit Floating-point (default) or 16-bit Integer	32-bit Floating-point: A real value, range 3.40282e+38 through 3.40282e+38 16-bit Integer: The low word of the 32-bit channel data contains the 16-bit integer channel value. The high word contains the sign of the 16-bit integer. If the 16-bit integer result is negative, the upper word in the 32-bit channel data is set to 0xFFFF. If the 16-bit integer result is positive, the upper word is set to 0x0000. When the Channel Value Format parameter is set to 16-bit Integer, 1000 Eng Units are equal to 1.0 A/D Unit.
High Scale Value (Eng Units)	The defaults and ranges for the four scaling parameters depend on the configured Range Type and Channel Value Format.	Scaling is disabled if: High Scale Eng. Units = High Scale A/D Units and Low Scale Eng. Units = Low Scale A/D Units. Default is High A/D Limit of selected range type. When *Channel Value Format* is set to 32-bit Floating-point, range is -3.40282e+38 through 3.40282e+38. When set to 16-bit Integer, range -32,768 through +32,767.
Low Scale Value (Eng Units)		
High Scale Value (A/D Units)		
Low Scale Value (A/D Units)		
Positive Rate of Change Limit (Eng Units/Second)	Range: 0.0 (default) through 3.40282e+38	Rate of change in Engineering Units per Second that will trigger a Positive Rate of Change alarm. If set to 0, limit is disabled. Used with “Rate of Change Sampling Rate” parameter.
Negative Rate of Change Limit (Eng Units/Second)	Range: 0.0 (default) through 3.40282e+38	Rate of change in Engineering Units per Second that will trigger a Negative Rate of Change alarm. If set to 0, limit is disabled. Used with “Rate of Change Sampling Rate” parameter.
Rate of Change Sampling Rate (ms)	0 (default) through 300	Time from 0 through 300 seconds to wait between comparisons. If set to the default value of 0.0, Module checks after every input sample.
High-High Alarm (Eng Units)	The defaults and ranges for these parameters depend on the configured Range and Channel Value Format.	Alarms and Deadbands All of the alarm parameters are specified in Engineering Units. To use alarming, Diagnostic Reporting or Fault Reporting must be enabled. ***High-High Alarm and Low-Low Alarm:*** When the configured value is reached or passed, a Low-Low Alarm
High Alarm (Eng Units)		
Low Alarm (Eng Units)		

Parameter	Choices	Description
Low-Low Alarm (Eng Units)		or High-High Alarm is triggered. The configured values must be lower than/higher than the corresponding low/high alarm limits. ***High Alarm and Low Alarm:*** When the configured value is reached or below (above), a Low (High) Alarm is triggered. ***High and Low Alarm Deadbands:*** A range in Engineering Units above the alarm condition (low deadband) or below the alarm condition (high deadband) where the alarm status bit can remain set even after the alarm condition goes away. For the alarm status to clear, the channel input must fall outside the deadband range. Alarm Deadbands should not cause the alarm clear condition to be outside the Engineering Unit User Limits range. For example, if the engineering unit range for a channel is -1000.0 to +1000.0 and a High Alarm is set at +100.0, the High Alarm Deadband value range is 0.0 to less than 1100.0. A deadband of 1100.0 or more would put the High Alarm clear condition below –1000.0 units making the alarm impossible to clear within the limits.
High-High Alarm Deadband (Eng Units)		
High Alarm Deadband (Eng Units)		
Low Alarm Deadband (Eng Units)		
Low-Low Alarm Deadband (Eng Units)		
User Offset	16-Bit Integer range: -32768 through 32768 32-Bit Floating-point, range: -3.40282e+38 through 3.40282e+38. 0.0 (default) 0.0 (default)	Engineering Units offset to change the base of the input channel. This value is added to the scaled value on the channel prior to alarm checking.
Software Filtering	Disabled (default) or Enabled	Controls whether software filtering will be performed on the inputs.
Integration Time (ms)	0 (default) through 4,294,967,295 ms	Specifies the amount of time in milliseconds for the software filter to reach 63.2% of the input value. A value of 0 indicates software filter is disabled. A value of 100 indicates data will achieve 63.2% of its value in 100ms.
Diagnostic Reporting Enable	Disabled (default) or Enabled *(Available only if Module Level Diagnostic Reporting is enabled on the Settings tab.)*	If Diagnostic Reporting is enabled, Module reports channel alarms in the Diagnostic Reference memory. Channel alarms can be individually enabled.
Fault Reporting Enable		If Fault Reporting is enabled, Module logs a fault log in the I/O Fault table for each occurrence of a channel alarm. Fault reporting for channel alarms can be individually enabled.

Input Scaling: ALG232

The default input mode and range are single-ended, unipolar. In 0 to 10V mode, input data is scaled so that 0 volts corresponds to a count of 0 and 10 volts corresponds to a count of +32000.

The bipolar range and mode can be selected by changing Module's configuration parameters. In bipolar mode, -10 V corresponds to a count of -32000, 0 V corresponds to a count of 0, and +10 V corresponds to a count of +32000.

Factory calibration adjusts the analog value per bit (resolution) to a multiple of full scale (0.3125 mV/bit). The data is then scaled with the 32000 counts over the analog range. The data is scaled as shown below.

Figure 289: Input Scaling ALG232

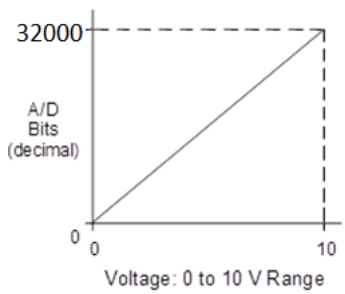

By default, Module converts a voltage input over the entire span of its configured Range into a floating-point value for the CPU. By modifying one or more of the four channel scaling parameters (Low/High Scale Value parameters) from their defaults, the scaled Engineering Unit range can be changed for a specific application. Scaling can provide inputs to the Controller that are already converted to their physical meaning or convert input values into a range that is easier for the application to interpret. Scaling is always linear and inverse scaling is possible. All alarm values apply to the scaled Engineering Units value, not to the A/D input value.

The scaling parameters only set up the linear relationship between two sets of corresponding values. They do not have to be the limits of the input.

Example:

For a voltage input, 6.0 V equals a speed of 20 fps, and 1.0 V equals 0 fps. The relationship in this range is linear. For this example, the input values should represent speed rather than volts. The following channel configuration sets up this scaling:

High Scale Value (Eng Units) = 20.000
Low Scale Value (Eng Units) = 0.000
High Scale Value (A/D Units) = 6.000
Low Scale Value (A/D Units) = 1.000

For this example, 1.0 V to 6.0 V is the normal voltage range, but Module will attempt to scale the inputs for a voltage that lies outside the range. If a voltage of 10.0 V were input to the channel, Module would return a scaled channel value of 36.000. The application should use alarms or other precautions for scaled inputs that are outside the acceptable range or otherwise invalid.

Figure 290: Input Scaling ALG232

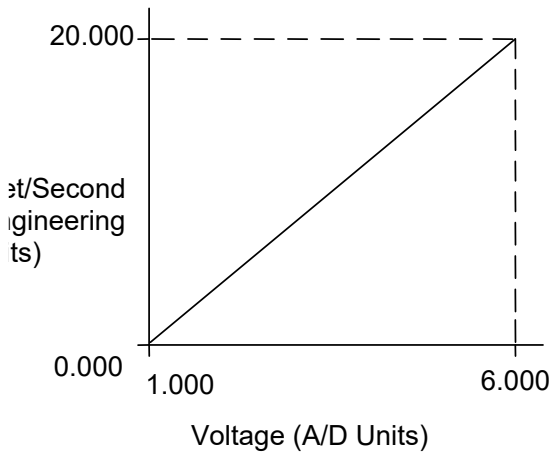

Rate of Change Alarms: ALG232

ALG232 can detect both Negative Rate of Change and Positive Rate of Change in Engineering Units per Second. When either of the Rate of Change parameters is configured to be non-zero, Module takes the difference in Engineering Units between the previous sample and the current sample, then divides by the elapsed time between samples.

If the Engineering Unit change from the previous sample to current sample is negative, Module compares the rate change with the Negative Rate of Change parameter.

If the Engineering Unit change between samples is positive, Module compares the rate change with the Positive Rate of Change parameter value.

In either case, if the rate of change is greater than the configured rate, a rate of change alarm occurs. The actions taken by Module following the alarm depend on the enabled rate of change actions that have been set up in the Diagnostic Reporting Enable and Fault Reporting Enable parameters.

The Rate of Change Sampling Rate parameter determines how frequently Module compares the Rate of Change. The minimum value which can be used with this parameter is 60 ms, i.e., Module can compare the rate of change after every 60 ms.

When the CPU transitions to RUN mode or Module field power is cycled, the ALG232 waits 100 ms before starting Rate of Change detection. This is to ignore any glitches in the input signal.

Using Alarming

The Diagnostic Reporting Enable and Fault Reporting Enable configuration parameters can be used to enable different types of responses for individual channel alarms. By default, all responses are disabled on every channel. Any combination of alarms can be enabled for each channel.

- If Diagnostic Reporting is enabled, Module reports channel alarms in reference memory at the Diagnostic Reference address for that channel.
- If Fault Reporting is enabled, Module logs a fault log in the I/O Fault table for each occurrence of a channel alarm.

Module Status Data: ALG232

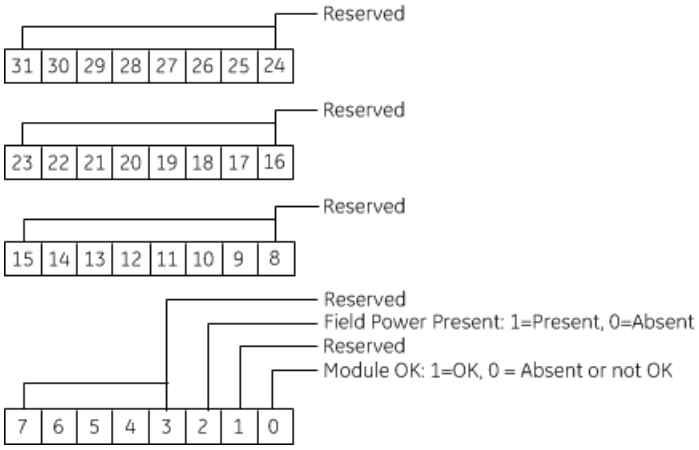

9.6.6 Channel Input Data: ALG232

Module reports its channel input data in its configured input words, beginning at its assigned Channel Value Reference Address. Each channel occupies 2 words (whether the channel is used or not):

Depending on its configured Channel Value Format, each enabled channel reports a 32-bit floating-point or 16-bit integer value to the CPU.

In the 16-bit integer mode, the low word of the 32-bit channel data area contains the 16-bit integer channel value. The high word (upper 16-bits) of the 32-bit value is set with the sign extension of the 16-bit integer. This sign-extended upper word allows the 16-bit integer to be read as a 32-bit integer type in logic without losing the sign of the integer. If the 16-bit integer result is negative, the upper word in the 32-bit channel data has the value 0xFFFF. If the 16-bit integer result is positive, the upper word is 0x0000.

The 16-bit resolution module analog input data is stored in the CPU in 16-bit 2’s complement format as displayed in the following figure.

MSB LSB

15	14	13	12	11	10	9	8	7	6	5	4	3	2	1	0

Channel Diagnostic Data: ALG232

In addition to the input data from field devices, Module can be configured to report channel diagnostics status data to the CPU. The CPU stores this data at the *Diagnostic Reference Address* configured for Module. Use of this feature is optional.

The diagnostics data for each channel occupies two words (whether the channel is used or not):

When a diagnostic bit equals 1, the alarm or fault condition is present on the channel. When a bit equals 0 the alarm or fault condition is either not present or detection is not enabled in the configuration for that channel.

For each channel, the format of this data is:

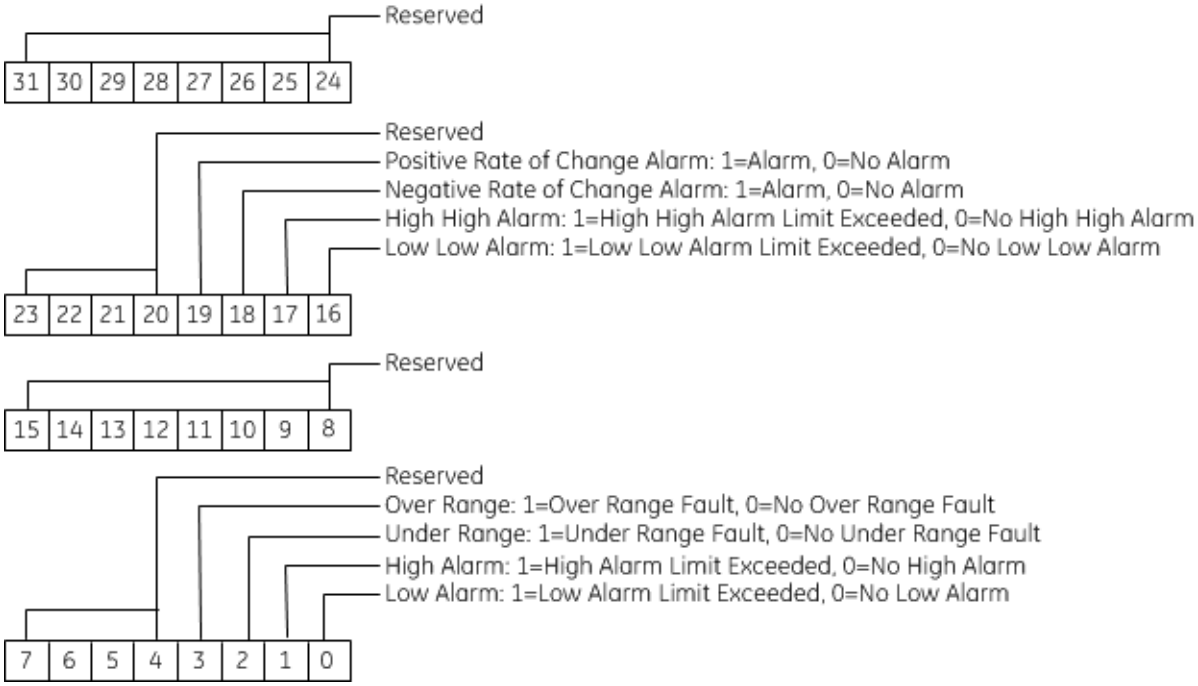

9.6.7 Field Wiring: ALG232

Terminal	Single-ended Mode	Differential Mode
1, 2	not used	
3	Channel 1	Channel 1 +
4	Channel 2	Channel 1 -
5	Channel 3	Channel 2 +
6	Channel 4	Channel 2 -
7	Channel 5	Channel 3 +
8	Channel 6	Channel 3 -
9	Channel 7	Channel 4 +
10	Channel 8	Channel 4 -
11	Channel 9	Channel 5 +
12	Channel 10	Channel 5 -
13	Channel 11	Channel 6 +
14	Channel 12	Channel 6 -
15	Channel 13	Channel 7 +
16	Channel 14	Channel 7 -
17	Channel 15	Channel 8 +
18	Channel 16	Channel 8 -
19	Common	Common
20	Ground	Ground

Connections for 16-channel single-ended mode are displayed in Figure 291 and for 8-channel differential mode in Figure 292. Single-ended mode is the default operating mode for Module. Differential mode must be selected by configuration.

16 Single-ended Channels

Figure 291: Field Wiring Single-Ended ALG232

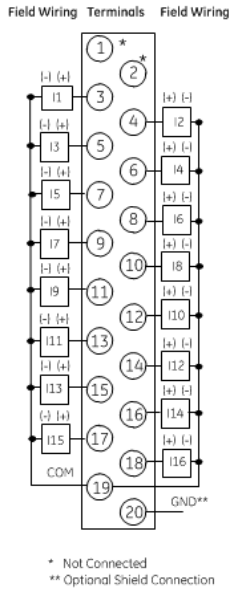

8 Differential Channels

Figure 292: Field Wiring Differential ALG232

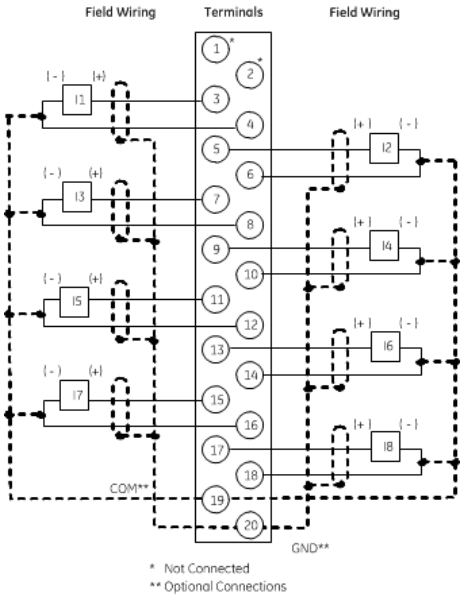

9.7 Analog Input module Advanced Diagnostics 16-Channel Current: IC694ALG233

Figure 293: IC694ALG233

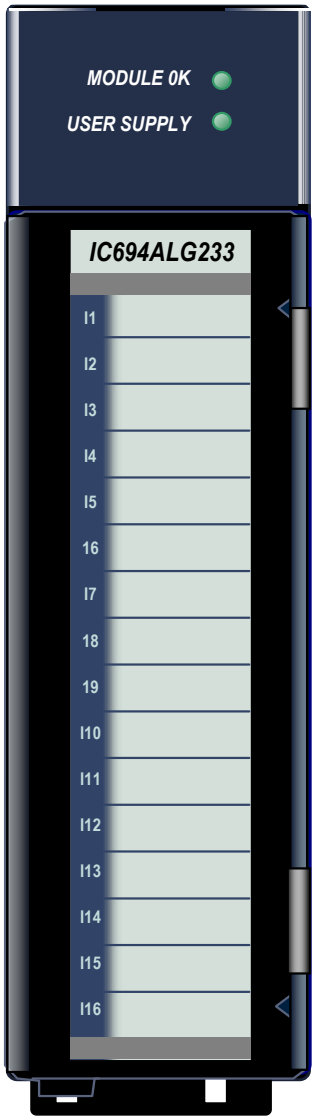

The ***PACSystems RX3i 16-Channel Analog Current Input*** module, IC694ALG233, provides sixteen single-ended input channels. Each input can be configured using the configuration software for any of three input ranges:

- 4 to 20 mA
- 0 to 20 mA
- 4 to 20 mA Enhanced

High and Low alarm limits are available on all ranges. In the 4 to 20 mA Enhanced range, a low alarm limit can be set up to detect input current from 4 mA to 0 mA, providing open-wire fault detection in 4 to 20 mA Enhanced applications.

Module also reports module status and external power supply status to the CPU using its assigned program reference addresses.

This module can be installed in any I/O slot that has a serial connector in an RX3i system.

9.7.1 Module Power

This module consumes 120 mA from the 5 Vdc bus on the RX3i backplane. It also requires 65 mA from a user-supplied +24 Vdc supply, which must also supply current for each current loop employed.

9.7.2 Features

- Completely software-configurable, no module jumpers to set
- Open-circuit detection for all inputs in 4 to 20 mA Enhanced Range
- Configurable scaling and offsets per channel
- High alarm, low alarm, high-high alarm, low-low alarm detection and reporting selectable per channel
- Module fault reporting
- Supports diagnostic point fault contacts in the logic program
- Positive and negative Rate of Change Alarms
- Display of module serial number, revision and date code in programming software.
- Module supports insertion into and removal from an RX3i Universal Backplane which is under power. Refer to Section 2.6.4, *Hot Insertion and Removal*.
- Module supports firmware upgrades using the WinLoader software utility (if the host CPU has a serial port) or using a Web-based tool (if

the host CPU has no serial port). Instructions are included with the firmware upgrade kit.[25]

9.7.4 LEDs: ALG233

Module **OK** LED provides module status information as follows:

- **ON**: status is **OK**, module configured;
- **OFF**: no backplane power or software not running (watchdog timer timed out);
- **Continuous rapid blinking**: configuration data not received from CPU;
- **Slow blinking, then OFF**: failed power-up diagnostics or encountered code execution error.

The **USER SUPPLY** LED indicates that the external 24 Vdc supply is within specifications.

9.7.5 Specifications: ALG233

ALG233	Specification
Number of Channels	1 to 16 selectable; single-ended
Input Current Ranges	0 to 20 mA, 4 to 20 mA and 4 to 20 mA Enhanced (selectable per channel)
Calibration	Factory calibrated to: 0.5 µA per count on 4 to 20 mA range 0.625 µA per count on 0 to 20 mA and 4 to 20 mA Enhanced range
Update Rate for All Channels	5 ms
Resolution at 0–20 mA	0.625 µA/bit
Resolution at 4–20 mA	0.5 µA/bit
Resolution at 4–20 mA Enhanced	0.5 µA/bit
Absolute Accuracy[58,59]	±0.25% of full scale at 25°C (77°F) ± 0.5% of full scale over specified operating temperature range
Linearity	< 4 LSB from 4 to 20 mA (4 to 20 mA range) < 4 LSB from 100 µA to 20 mA (0 to 20 mA and 4 to 20 mA Enhanced ranges)
Isolation, Field to Backplane (optical) and to frame ground	250 Vac continuous; 1500 Vac for 1 minute
Common Mode Voltage	0 volts (single-ended channels)
Cross-Channel Rejection	> 70 dB from DC to 1 kHz
Input Impedance	250 Ω
Input Low Pass Filter Response	23 Hz
External Supply Voltage Range	20 to 30 Vdc
External Supply Voltage Ripple	10%
Power Consumption	120 mA from the +5 Vdc bus on the backplane 65 mA from 24 Vdc external user power supply (in addition to current loop currents)

[58] *In the presence of severe Radiated RF interference (IEC 61000-4-3, 10V/m), accuracy may be degraded to ±5% of full scale.*

[59] *In the presence of severe Conducted RF interference (IEC 61000-4-6, 10Vrms), accuracy may be degraded to ±1% of full scale.*

9.7.6 Configuration: ALG233

Module Settings: ALG233

Parameter	Choices	Description
Active Channels	1 to 16	The number of channels to be scanned. Channels are scanned in sequential, contiguous order.
Channel Value Reference Address	Valid memory types: %AI (default), %AQ, %R, %W, Symbolic Memory[60]	The starting address in memory for input data from Module.
Channel Value Reference Length	Read-only	Depends on the number of active channels. Each channel provides two words of analog input data to the Controller CPU.
Diagnostic Reference Address	Valid memory types: %I (default), %Q, %G, %M, %T, Symbolic Memory[60]	Starting address for the channel diagnostics data. Used only when Module Level Diagnostic Reporting is enabled.
Diagnostic Reference Length	Read-only	The amount of memory required for the channel diagnostics data. When Module Level Diagnostic Reporting is enabled, 32 bits of diagnostic data are allocated for each active channel.
Module Status Reference Address	Valid memory types: %I (default), %Q, %G, %M, %T, Symbolic Memory[60]	The starting address in memory for status information from Module.
Module Status Reference Length	0, 32	The number of module status bits reported to the CPU. Data format is displayed in the following figure. When set to 0, status reporting is disabled. To enable status reporting, set this parameter to a value other than 0.
I/O Scan Set	1 through 32	Assigns Module I/O status data to a scan set defined in the CPU configuration. Determines how often the RX3i polls the data
Inputs Default	Force Off (default) or Hold Last State	In the event of module failure or removal, this parameter specifies the state of all Channel Value References for Module. Force Off = Channel Values clear to 0. Hold Last State = Channels hold their last state.
Module Level Diagnostic Reporting	Disabled (default) or Enabled	If enabled, 32 bits of data are allocated for each active channel. Diagnostic Reporting and Fault Reporting can be enabled separately for each channel.

[60] *Note: To support this feature, Variable Mode property should be enabled in Machine Edition.*

Channel Configuration Parameters: ALG233

Parameter	Choices	Description
Range	4-20 mA (default), 0-20 mA, or 4-20 mA + (enhanced)	In the 4 to 20 mA range, input currents from 4 to 20 mA are reported to the CPU as values from 0 to 32000 units. In the 0 to 20 mA range, input currents from 0 to 20 mA are reported to the CPU as values from 0 to 3200 units. In the 4 to 20 mA enhanced range, currents from 4 to 20 mA are reported to the CPU as values from 0 to 32000 units. Currents below 4 mA are reported as negative values with 0 represented as –8000 units.
Channel Value Format	32-bit Floating-point (default) or 16-bit Integer	32-bit Floating-point: A real value, range 3.40282e+38 through 3.40282e+38 16-bit Integer: The low word of the 32-bit channel data contains the 16-bit integer channel value. The high word contains the sign of the 16-bit integer. If the 16-bit integer result is negative, the upper word in the 32-bit channel data is set to 0xFFFF. If the 16-bit integer result is positive, the upper word is set to 0x0000. When the Channel Value Format parameter is set to 16-bit Integer, 1000 Eng Units are equal to 1.0 A/D Unit.
High Scale Value (Eng Units)	The defaults and ranges for the four scaling parameters depend on the configured Range Type and Channel Value Format.	Scaling is disabled if: High Scale Eng. Units = High Scale A/D Units and Low Scale Eng. Units = Low Scale A/D Units. Default is High A/D Limit of selected range type. When *Channel Value Format* is set to 32-bit Floating-point, range is -3.40282e+38 through 3.40282e+38. For 16-bit Integer, range is -32,768 through +32,767.
Low Scale Value (Eng Units)		
High Scale Value (A/D Units)		
Low Scale Value (A/D Units)		
Positive Rate of Change Limit (Eng Units/Second)	Range: 0.0 (default) through 3.40282e+38	Rate of change in Engineering Units per Second that will trigger a Positive Rate of Change alarm. If set to 0, limit is disabled. Used with “Rate of Change Sampling Rate” parameter.
Negative Rate of Change Limit (Eng Units/Second)	Range: 0.0 (default) through 3.40282e+38	Rate of change in Engineering Units per Second that will trigger a Negative Rate of Change alarm. If set to 0, limit is disabled. Used with “Rate of Change Sampling Rate” parameter.
Rate of Change Sampling Rate (Seconds)	0.0 (default) through 300.0	Time from 0 through 300 seconds to wait between comparisons. If set to the default value of 0.0, Module checks after every input sample.
High-High Alarm (Eng Units)	The defaults and ranges for these parameters depend on the configured Range and Channel Value Format.	Alarms and Deadbands All of the alarm parameters are specified in Engineering Units. To use alarming, Diagnostic Reporting or Fault Reporting must be enabled. ***High-High Alarm and Low-Low Alarm:*** When the configured value is reached or passed, a Low-Low Alarm or High-High Alarm is triggered. The configured values must be lower than/higher than the corresponding low/high alarm limits.
High Alarm (Eng Units)		
Low Alarm (Eng Units)		
Low-Low Alarm (Eng Units)		

Parameter	Choices	Description
High-High Alarm Deadband (Eng Units)		***High Alarm and Low Alarm:*** When the configured value is reached or below (above), a Low (High) Alarm is triggered. ***High and Low Alarm Deadbands:*** A range in Engineering Units above the alarm condition (low deadband) or below the alarm condition (high deadband) where the alarm status bit can remain set even after the alarm condition goes away. For the alarm status to clear, the channel input must fall outside the deadband range. Alarm Deadbands should not cause the alarm clear condition to be outside the Engineering Unit User Limits range. For example, if the engineering unit range for a channel is -1000.0 to +1000.0 and a High Alarm is set at +100.0, the High Alarm Deadband value range is 0.0 to less than 1100.0. A deadband of 1100.0 or more would put the High Alarm clear condition below –1000.0 units making the alarm impossible to clear within the limits.
High Alarm Deadband (Eng Units)		
Low Alarm Deadband (Eng Units)		
Low-Low Alarm Deadband (Eng Units)		
User Offset	16-bit Integer range: -32768 through 32768 32-bit Floating-point, range: -3.40282e+38 through 3.40282e+38. 0.0 (default)	Engineering Units offset to change the base of the input channel. This value is added to the scaled value on the channel prior to alarm checking.
Software Filtering	Disabled (default) or Enabled	Controls whether software filtering will be performed on the inputs.
Integration Time (ms)	0 (default) through 4,294,967,295 ms	Specifies the amount of time in milliseconds for the software filter to reach 63.2% of the input value. A value of 0 indicates software filter is disabled. A value of 100 indicates data will achieve 63.2% of its value in 100ms.
Diagnostic Reporting Enable	Disabled (default) or Enabled *(Available only if Module Level Diagnostic Reporting is enabled on the Settings tab.)*	If Diagnostic Reporting is enabled, Module reports channel alarms in the Diagnostic Reference memory. Channel alarms can be individually enabled.
Fault Reporting Enable		If Fault Reporting is enabled, Module logs a fault log in the I/O Fault table for each occurrence of a channel alarm. Fault reporting for channel alarms can be individually enabled.

Input Scaling: ALG233

In the 4 to 20 mA range, input data is scaled so that 4 mA corresponds to a count of 0 and 20 mA corresponds to a count of 32000.

In the 0 to 20 mA range, 0 mA corresponds to a count of 0 and 20 mA corresponds to a count of 32000. Full 12-bit resolution is available over the 4 to 20 mA and 0 to 20 mA ranges.

4 to 20 mA Enhanced range can also be configured. In that range, 0 mA corresponds to a count of -8000, 4 mA corresponds to a count of 0 (zero) and 20 mA corresponds to a count of +32000. A low alarm limit can be set up to detect input current from 4 mA to 0 mA, providing open-wire fault detection in 4 to 20 mA applications.

Figure 294: Input Scaling ALG233

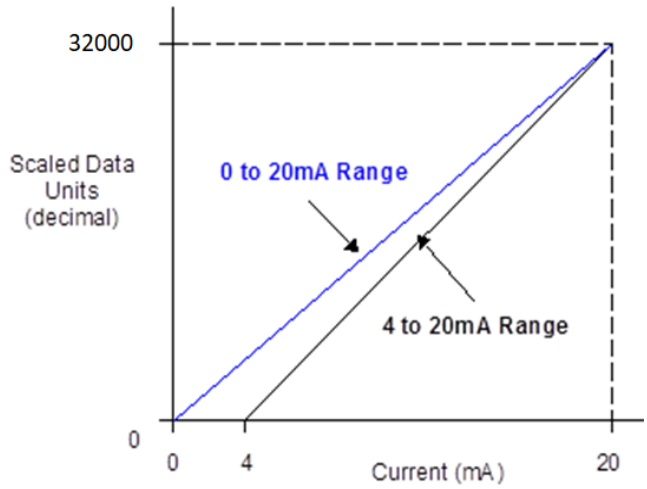

Analog values are scaled over the range of the converter. Factory calibration adjusts the analog value per bit (resolution) to a multiple of full scale (0.625 µA/ bit in 0-20 mA range;0.5 µA/bit in other ranges). This calibration leaves a normal 16-bit converter with 32000 counts. The data is scaled with the 32000 counts over the analog range. The data is scaled as shown above.

Rate of Change Alarms

The ALG233 can detect both Negative Rate of Change and Positive Rate of Change in Engineering Units per Second. When either of the Rate of Change parameters is configured to be non-zero, Module takes the difference in Engineering Units between the previous sample and the current sample, then divides by the elapsed time between samples.

If the Engineering Unit change from the previous sample to current sample is negative, Module compares the rate change with the Negative Rate of Change parameter.

If the Engineering Unit change between samples is positive, Module compares the rate change with the Positive Rate of Change parameter value.

In either case, if the rate of change is greater than the configured rate, a rate of change alarm occurs. The actions taken by Module following the alarm depend on the enabled rate of change actions that have been set up in the Diagnostic Reporting Enable and Fault Reporting Enable parameters.

The Rate of Change Sampling Rate parameter determines how frequently Module compares the Rate of Change. The minimum value which can be used with this parameter is 60 ms i.e., Module can compare the rate of change after every 60 ms.

When the CPU transitions to RUN mode or Module field power is cycled, the ALG233 waits 100 ms before starting Rate of Change detection. This is to ignore any glitches in the input signal.

Module Status Data: ALG233

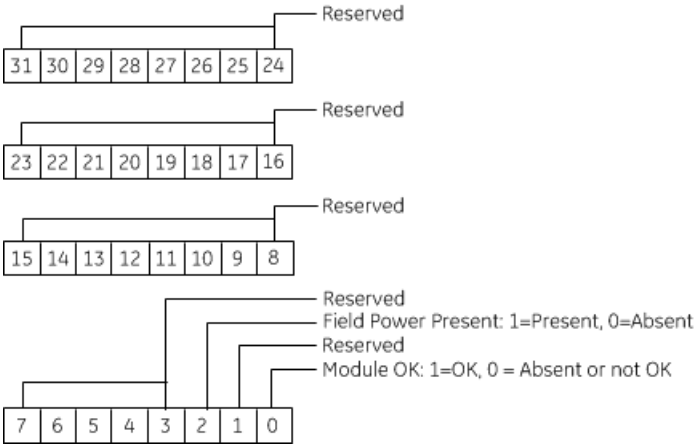

Channel Input Data: ALG233

Module reports its channel input data in its configured input words, beginning at its assigned Channel Value Reference Address. Each channel occupies 2 words, whether or not the channel is used: Depending on its configured Channel Value Format, each enabled channel reports a 32-bit floating-point or 16-bit integer value to the CPU.

In the 16-bit integer mode, the low word of the 32-bit channel data area contains the 16-bit integer channel value. The high word (upper 16-bits) of the 32-bit value is set with the sign extension of the 16-bit integer. This sign-extended upper word allows the 16-bit integer to be read as a 32-bit integer type in logic without losing the sign of the integer. If the 16-bit integer result is negative, the upper word in the 32-bit channel data has the value 0xFFFF. If the 16-bit integer result is positive, the upper word is 0x0000.

The 16-bit resolution module analog input data is stored in the CPU in 16-bit 2’s complement format as displayed in the following figure.

MSB LSB

15	14	13	12	11	10	9	8	7	6	5	4	3	2	1	0

Channel Diagnostic Data: ALG233

In addition to the input data from field devices, Module can be configured to report channel diagnostics status data to the CPU. The CPU stores this data at the *Diagnostic Reference Address* configured for Module. Use of this feature is optional.

The diagnostics data for each channel occupies two words (whether the channel is used or not):

When a diagnostic bit equals 1, the alarm or fault condition is present on the channel. When a bit equals 0 the alarm or fault condition is either not present or detection is not enabled in the configuration for that channel.

For each channel, the format of this data is:

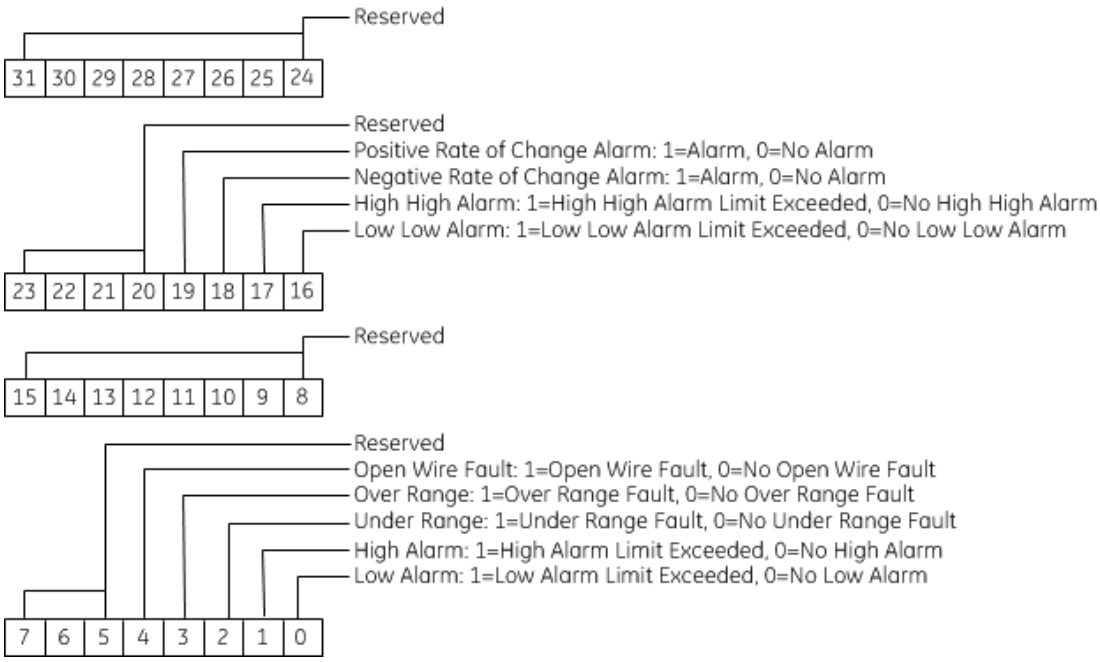

9.7.7 Field Wiring: ALG233

Figure 295: Field Wiring ALG223

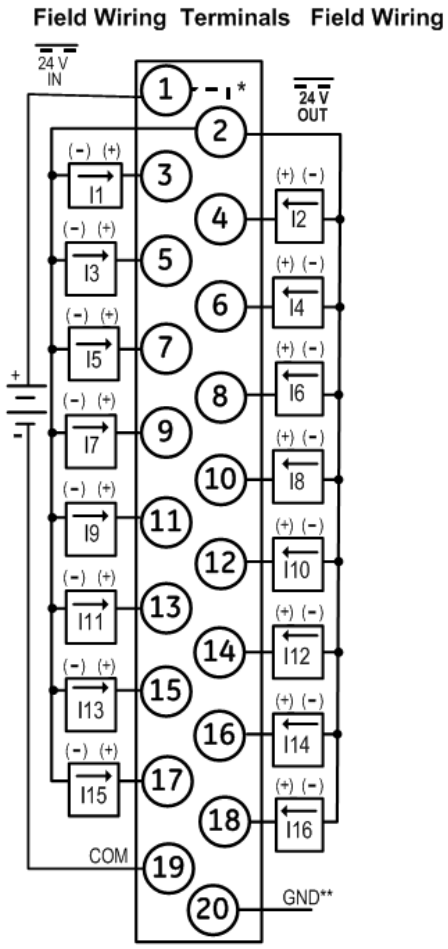

* Internally Connected

** Optional Shield Connection

Terminal	Connection
1	User-supplied 24 V Input; provides loop power via 24 V_{OUT} terminal (pin 2)
2	+24 V loop power tie point
3	Current Input, Channel 1
4	Current Input, Channel 2
5	Current Input, Channel 3
6	Current Input, Channel 4
7	Current Input, Channel 5
8	Current Input, Channel 6
9	Current Input, Channel 7
10	Current Input, Channel 8
11	Current Input, Channel 9
12	Current Input, Channel 10
13	Current Input, Channel 11
14	Current Input, Channel 12
15	Current Input, Channel 13
16	Current Input, Channel 14
17	Current Input, Channel 15
18	Current Input, Channel 16
19	Common connection to input current sense resistors; user-supplied 24 V input return or 24 V_{IN} return
20	Frame ground connections for cable shields

Figure 296: Connection Example 1 ALG233

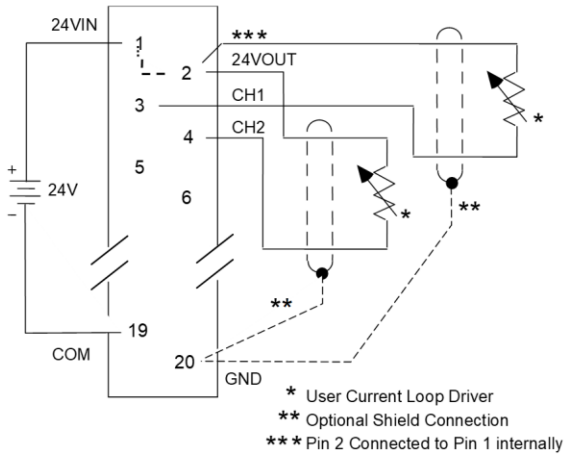

Figure 297: Connection Example 2 ALG233*

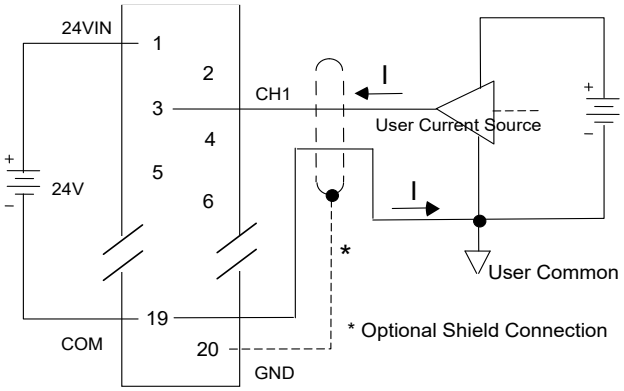

*To limit common-mode voltages, the current source can be tied to the COM terminal if the source is floating

9.8 Analog Input Module 8-/4-Channel Current/Voltage: IC695ALG608 Analog Input Module 16-/8-Channel Current/Voltage: IC695ALG616

Figure 298: IC695ALG616

Non-Isolated Differential Analog Input Current/Voltage module IC695ALG608 provides eight single-ended or four differential input channels. ***Non-Isolated Differential Analog Input Current/Voltage*** module IC695ALG616, (Figure 298) provides 16 single-ended or 8 differential input channels. Analog input channels can be configured for these ranges:

- Current: 0 to 20 mA, 4 to 20 mA, ±2 0mA
- Voltage: ±10 Vdc, 0 to 10 Vdc, ±5 Vdc, 0 to 5 Vdc, 1 to 5 Vdc.

This module can be used with a Box-style (IC694TBB032), Extended Box-style (IC694TBB132), Spring-style (IC694TBS032), or Extended Spring-style (IC694TBS132) terminal Block. Extended terminal blocks provide the extra shroud depth needed for shielded wiring. Refer to Chapter 17 for more information about Terminal Blocks. Terminal Blocks are ordered separately.

These modules must be located in an RX3i Universal Backplane.

9.8.1 Features

- Completely software-configurable, no module jumpers to set
- Full auto-calibration
- On-board error-checking
- Open-circuit detection for all voltage and 4-20mA inputs
- Configurable scaling and offsets per channel
- High alarm, low alarm, high-high alarm, low-low alarm detection and reporting selectable per channel
- Module fault reporting
- Supports diagnostic point fault contacts in the logic program
- Flash memory for future upgrades
- Positive and negative Rate of Change Alarms
- Auto-calibration at startup
- Configurable interrupts for channel alarms and faults
- Terminal Block insertion or removal detection
- Module supports insertion into and removal from an RX3i Universal Backplane which is under power. Refer to *Hot Insertion and Removal*.

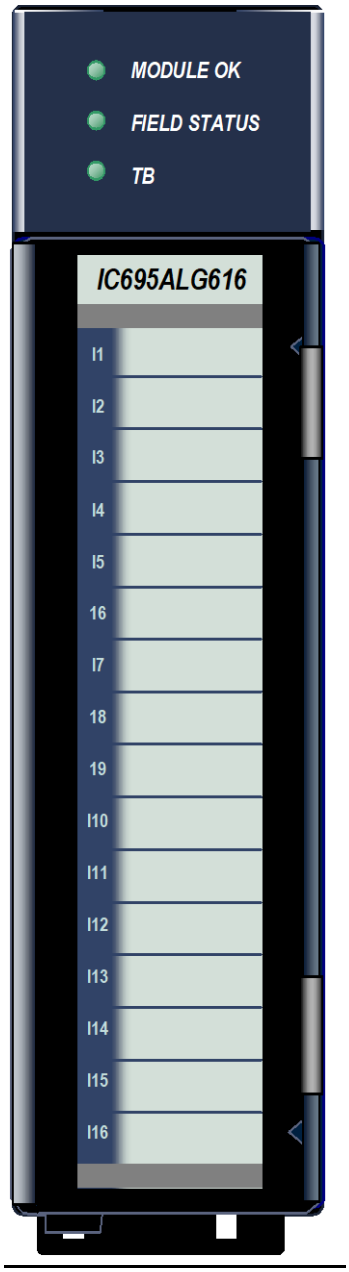

9.8.2 LEDs: ALG608 & ALG616

Module **OK** LED indicates module status. The **Field Status** LED indicates the presence of a fault on at least one channel or a terminal block error. The TB (Terminal Block) LED indicates the presence or absence of the terminal block. LEDs are powered by the backplane power bus.

LED	Indicates
Module OK	ON Green: Module OK and configured.

	Slow Flashing Green or Amber: Module OK but not configured. Quick Flashing Green: Error. OFF: Module is defective or no backplane power present
Field Status	ON Green: No faults on any enabled channel, and Terminal Block is present. ON Yellow: Fault on at least one channel. OFF: Terminal block not present or not fully seated.
TB	ON Red: Terminal block not present or not fully seated. ON Green: Terminal block is present. OFF: No backplane power to module.

9.8.3 Specifications: ALG608 & ALG616

ALG608/ALG616	Specifications			
Input Ranges	Current: 0 to 20 mA, 4 to 20 mA, ±20 mA Voltage: ±10 Vdc, 0 to 10 Vdc, ±5 Vdc, 0 to 5 Vdc, 1 to 5 Vdc			
Backplane Power Requirements	Module	Rev	5.0 V +5% / -2.5%	3.3 V +5% / -3%
	ALG608	-EA & earlier	330 mA max	600 mA max
		-FB & later	200 mA max	200 mA max
	ALG616	-EA & earlier	450 mA max	600 mA max
		-FB & later	350 mA max	200 mA max
CPU Version	PACSystems RX3i CPU firmware version 3.0 and later			
Programmer Version	Machine Edition version 5.0 SP3 and later			
Power Dissipation within Module	Module	Rev	Power Dissipation	
	ALG608	-EA & earlier	4.83 W max	
		-FB & later	2.58 W max	
	ALG616	-EA & earlier	6.48 W max	
		-FB & later	4.25 W max	
Thermal De-rating	None			
Resolution	Refer to the table *Resolution and Range Types* in this section.			
Input Data Format	Configurable as floating-point IEEE 32-bit or 16-bit integer in a 32-bit field			
Filter Options	8 Hz, 12 Hz, 16 Hz, 40 Hz, 200 Hz, 500 Hz			
Module Scan Time (in ms)	Module scan can consist of up to four acquisition cycles. Each cycle includes a specific set of channels, as described in the section “Channel Scanning”. Total Scan Time depends on the number of acquisition cycles in the scan, and the configured filter option.			
Configured Filter	*Number of Acquisition Cycles in the Scan*			
	1	2	3	4
8 Hz filter	121	241	362	482
12 Hz filter	81	161	242	322
16 Hz filter	61	121	182	242
40 Hz filter	21	41	62	82
200 Hz filter	5	9	14	18
500 Hz filter, filtering and rate detection disabled	3	5	7	9
500 Hz filter, all options enabled	3	6	9	12
Input Impedance	>100 kΩ voltage inputs			
Current Input Resistance	249 Ω ±1%			
Open Circuit Detection time	1 second maximum			
Overvoltage	±60 Vdc continuous, maximum			
Overcurrent	±28 mA continuous, maximum			

ALG608/ALG616	Specifications		
Normal Mode Noise Rejection in dB		*At 50 Hz*	*At 60 Hz*
	8 Hz filter	103	97
	12 Hz filter	94	89
	16 Hz filter	39	65
	40 Hz filter	4	7
	200 Hz filter	0.1	0.2
	500 Hz	0.0	0.0
Common Mode Noise Rejection	120 dB minimum at 50/60 Hz with 8 Hz filter 110 dB minimum at 50/60 Hz with 12 Hz filter		
Channel-Channel DC Crosstalk	-80 dB minimum (single ended mode) -80 dB minimum (differential mode, grounded common) -60 dB minimum (differential mode, floating common)		
Calibrated Accuracy[61] at 13°C – 33°C with 8 Hz, 12 Hz and 16 Hz filter	±5 Vdc, ±10 Vdc, ±20 mA: 0.05% of range. 0 to 10 Vdc, 0 to 5 Vdc, 1 to 5 Vdc, 0 to 20 mA: 0.1% of range. 4 to 20 mA: 0.125% of range		
Calibrated Accuracy[61] at 0°C – 60°C with 8 Hz, 12 Hz and 16 Hz filter	0 to 10 Vdc, 0 to 5 Vdc, 1 to 5 Vdc: 0.2% of range. 0 to 20 mA: 0.25% of range. 4 to 20 mA: 0.3125% of range. ±5 Vdc, ±10 Vdc: 0.1% ±20 mA: 0.125% of range.		
Calibration Viability	Factory calibration is valid for 12 months for all ranges and operating conditions.		
Isolation Voltage terminal block to backplane/chassis	Opto-isolated, transformer isolated 250 Vac continuous/1500 Vac for 1 minute		

For product standards and general specifications, refer to Appendix A:.

[61] *In the presence of severe RF interference (IC 801-3, 10V/m), accuracy may be degraded by ±1.5% of range.*

9.8.4 Configuration: ALG608 & ALG616

Module Parameters: ALG608 & ALG616

Parameter	Default	Description
Channel Value Reference Address	%AIxxxxx	Starting address for the input data of Module. This defaults to the next available %AI block.
Channel Value Reference Length	ALG608: 16 ALG616: 32	The number of words used for the input data of Module. This parameter cannot be changed.
Diagnostic Reference Address	%Ixxxxx	Starting address for the channel diagnostics status data.
Diagnostic Reference Length	0	The number of bit reference bits required for the Channel Diagnostics data. When set to 0, Channel Diagnostics is disabled. To enable Channel Diagnostics mapping, change this to a non-zero value.
Module Status Reference Address	%Ixxxxx	Starting address for the status data of Module.
Module Status Reference Length	0	The number of bits (0 to 32) required for Module Status data. When set to 0, mapping of Module Status data is disabled. To enable Module Status data mapping, change this to a non-zero value.
I/O Scan Set	1	Assigns Module I/O status data to a scan set defined in the CPU configuration. Determines how often the RX3i polls the data
Inputs Default	Force Off	In the event of module failure or removal, this parameter specifies the state of all Channel Value References for Module. Force Off = Channel Values clear to 0. Hold Last State = Channels hold their last state.
Inputs Default w/o Terminal Block	Enabled	Enabled / Disabled: Controls whether inputs will be set to their defaults if the Terminal Block is removed.
Channel Faults w/o Terminal Block	Disabled	Enabled / Disabled: Controls whether channel faults and configured alarm responses are generated after Terminal Block removal. If Disabled, channel faults and alarms are suppressed when the Terminal Block is removed. This setting does not affect module faults including the Terminal Block loss/add fault generation.
Analog Input Mode	Single-ended Input Mode	Single-ended / Differential: This selection must match the input wiring to Module.
A/D Filter Frequency	40 Hz	Low pass A/D hardware filter setting for all inputs: 8, 12, 16, 40, 200, or 500 Hz. Frequencies below the filter setting are not filtered by hardware.
Range Type	Disabled	Current/Voltage, Disabled
Range (Not for Range Type Disabled)	-10 Vdc to +10 Vdc	Current/Voltage: -10 to +10 Vdc, 0 to +10 Vdc, 0 to +5 Vdc, 1 to +5 Vdc, -5 to +5 Vdc, -20 to +20 mA, 4 to 20 mA, 0 to 20 mA

Channel Parameters: ALG608 & ALG616

Parameter	Default	Description
Channel Value Format	32-bit Floating-point	16-bit integer or 32-bit floating-point
High Scale Value (Eng Units)	The defaults for the four Scaling parameters depend on the configured Range Type and Range. Each Range and Range Type has a different set of defaults.	Note: Scaling is disabled if both High Scale Eng. Units equals High Scale A/D Units and Low Scale Eng. Units equals Low Scale A/D Units. Default is High A/D Limit of selected range type.
Low Scale Value (Eng Units)		Default is Low A/D Limit of selected range type. Must be lower than the high scaling value.
High Scale Value (A/D Units)		Default is High A/D Limit of selected range type. Must be greater than the low scaling value.
Low Scale Value (A/D Units)		Default is Low A/D Limit of selected range type.

Input Scaling: ALG608 & ALG616

By default, Module converts a voltage or current input over the entire span of its configured Range into a floating-point value for the CPU. For example, if the Range of a channel is 4 to 20 mA, Module reports channel input values from 4.000 to 20.000. By modifying one or more of the four channel scaling parameters (Low/High Scale Value parameters) from their defaults, the scaled Engineering Unit range can be changed for a specific application. Scaling can provide inputs to the PLC that are already converted to their physical meaning or convert input values into a range that is easier for the application to interpret. Scaling is always linear and inverse scaling is possible. All alarm values apply to the scaled Engineering Units value, not to the A/D input value.

The scaling parameters only set up the linear relationship between two sets of corresponding values. They do not have to be the limits of the input.

Example 1

For a voltage input, 6.0 V represents a speed of 20 fps, and 1.0 V represents 0 fps. The relationship in this range is linear. For this example, the input values should represent speed rather than volts. The following channel configuration sets up this scaling:

High Scale Value (Eng Units) = 20.000

Low Scale Value (Eng Units) = 0.000

High Scale Value (A/D Units) = 6.000

Low Scale Value (A/D Units) = 1.000

For this example, 1.0 to 6.0 Vdc is the normal voltage range, but Module will attempt to scale the inputs for a voltage that lies outside the range. If a voltage of 10.0 Vdc were input to the channel,

Figure 299: Scaling Example ALG608 or ALG616

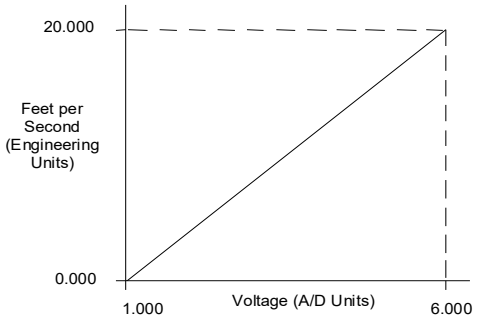

Module would return a scaled channel value of 36.000. The application should use alarms or take other precautions for scaled inputs that are outside the acceptable range or invalid.

Example 2

An existing application uses traditional analog to digital (A/D) count integer values. With scaling and the optional 16-bit integer input option, a channel can be configured to report integer count values. In this example, the application should interpret +10 Vdc as 32000 counts and -10 Vdc as -32000 counts. The following channel configuration will scale a ±10 Vdc input channel to ±32000 counts.

Channel Value Format = 16-bit Integer

High Scale Value (Eng Units) = 32000.0

Low Scale Value (Eng Units) = -32000.0

High Scale Value (A/D Units) = 10.000

Low Scale Value (A/D Units) = -10.000

Figure 300: Scaling Example ALG608 or ALG616

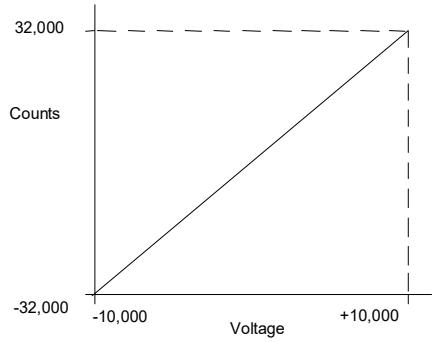

Channel Parameters (Continued)

Parameter	Default	Description
Positive Rate of Change Limit (Eng Units)	0.0	Rate of change in Engineering Units per Second that will trigger a Positive Rate of Change alarm. Default is disabled. Used with *Rate of Change Sampling Rate* parameter.
Negative Rate of Change Limit (Eng Units)	0.0	Rate of change in Engineering Units per Second that will trigger a Negative Rate of Change alarm. Default is disabled. Used with *Rate of Change Sampling Rate* parameter.
Rate of Change Sampling Rate	0.0	Time from 0 to 300 seconds to wait between comparisons. The default of 0.0 is to check after every input sample.

Rate of Change Alarms: ALG608 & ALG616

Modules IC695ALG608 and IC695ALG616 can detect both Negative Rate of Change and Positive Rate of Change in Engineering Units per Second. When either of the Rate of Change parameters is configured to be non-zero, Module takes the difference in Engineering Units between the previous rate of change sample and the current sample, then divides by the elapsed time between samples.

If the Engineering Unit change from the previous sample to the current sample is negative, Module compares the rate change with the Negative Rate of Change parameter.

If the Engineering Unit change between samples is positive, Module compares the results in comparing the rate change with the Positive Rate of Change parameter value.

In either case, if the rate of change is greater than the configured rate, a rate of change alarm occurs. The actions taken by Module following the

alarm depend on the enabled rate of change actions that have been set up in the "Diagnostic Reporting Enable", "Fault Reporting Enable", and "Interrupts Enabled" parameters.

The Rate of Change Sampling Rate parameter determines how frequently Module compares the Rate of Change. If the Rate of Change Sampling Rate is 0 or any time period less than the channel update rate, Module compares the Rate of Change for every input sample of the channel.

Channel Parameters (Continued)

Parameter	Default	Description
High-High Alarm (Eng Units)	The defaults for the High-High, High, Low, and Low-Low parameters depend on the configured Range Type and Range. Each Range and Range Type has a different set of default values.	Alarms and Deadbands All of the alarm parameters are specified in Engineering Units. To use alarming, the A/D Alarm Mode must also be configured as enabled. *High-High Alarm and Low-Low Alarm:* When the configured value is reached or passed, a Low-Low Alarm or High-High Alarm is triggered. The configured values must be lower than/higher than the corresponding low/high alarm limits. *High Alarm and Low Alarm:* When the configured value is reached or below (above), a Low (High) Alarm is triggered. High and Low Alarm Deadbands: A range in Engineering Units above the alarm condition (low deadband) or below the alarm condition (high deadband) where the alarm status bit can remain set even after the alarm condition goes away. For the alarm status to clear, the channel input must fall outside the deadband range. Alarm Deadbands should not cause the alarm clear condition to be outside the Engineering Unit User Limits range. For example, if the engineering unit range for a channel is -1000.0 to +1000.0 and a High Alarm is set at +100.0, the High Alarm Deadband value range is 0.0 to less than 1100.0. A deadband of 1100.0 or more would put the High Alarm clear condition below –1000.0 units making the alarm impossible to clear within the limits.
High Alarm (Eng Units)		
Low Alarm (Eng Units)		
Low-Low Alarm (Eng Units)		
High-High Alarm Deadband (Eng Units)		
High Alarm Deadband (Eng Units)		
Low Alarm Deadband (Eng Units)		
Low-Low Alarm Deadband (Eng Units)		
User Offset	0.0	Engineering Units offset to change the base of the input channel. This value is added to the scaled value on the channel prior to alarm checking.
Software Filtering	Disabled	Disabled / Enabled. Controls whether software filtering will be performed on the inputs.
Integration Time (ms)	0	Specifies the amount of time in milliseconds for the software filter to reach 63.2% of the input value. A value of 0 indicates the software filter is disabled. A value of 100 indicates data will achieve 63.2% of its value in 100 ms. Default is 0.

Using Alarming: ALG608 & ALG616

The Diagnostic Reporting Enable, Fault Reporting Enable, and Interrupt Enable configuration parameters can be used to enable different types of responses for individual channel alarms. By default, all responses are disabled on every channel. Any combination of alarm enables can be configured for each channel.

- If Diagnostic Reporting is enabled, Module reports channel alarms in reference memory at the Diagnostic Reference address for that channel.
- If Fault Reporting is enabled, Module logs a fault log in the I/O Fault table for each occurrence of a channel alarm.
- If Interrupts are enabled, an alarm can trigger the execution of an Interrupt Block in the application program, as explained below.

Using Interrupts: ALG608 & ALG616

To properly configure an I/O Interrupt, the Interrupt enables bit or bits must be set in the configuration profile of Module. In addition, the program block that should be executed in response to the channel interrupt must be mapped to the reference address of the corresponding channel.

Example:

In this example, the Channel Values Reference Address block is mapped to %AI0001-%AI0020. An I/O Interrupt block should be triggered if a High Alarm condition occurs on channel 2.

- Configure the High-Alarm condition.
- Set the High-Alarm Interrupt Enable flag for Channel 2 in Module configuration.

The reference address for Channel 2 corresponds to %AI00003 (2 Words per channel), so the interrupt program block Scheduling properties should be set for the "I/O Interrupt" Type and "%AI0003" as the Trigger.

Fault Reporting and Interrupts: ALG608 & ALG616

These modules have separate enable/disable options for Diagnostic Reporting and Interrupts. Normally, disabling a diagnostic (such as Low/High Alarm or Over/Under range) in the configuration means that

its diagnostic bit is never set. However, if interrupts are enabled for a condition and that interrupt occurs, the diagnostic bit for that condition is also set during the I/O Interrupt block logic execution. The next PLC input scan always clears this interrupt status bit back to 0, because Diagnostic Reporting has it disabled.

9.8.6 Module Data: ALG608 & ALG616

Module reports its input channel data in its configured input words, beginning at its assigned Channel Value Reference Address. Each channel occupies two words (whether the channel is used or not):

Channel Value Reference Address	Contains this Input
+0, 1	Channel 1
+2, 3	Channel 2
+4, 5	Channel 3
+6, 7	Channel 4
+8, 9	Channel 5
+10, 11	Channel 6
+12, 13	Channel 7
+14, 15	Channel 8

For Module IC695ALG616 Only:

+16, 17	Channel 9
+18, 19	Channel 10
+20, 21	Channel 11
+22, 23	Channel 12
+24, 25	Channel 13
+26, 27	Channel 14
+28, 29	Channel 15
+30, 31	Channel 16

Depending on its configured Channel Value Format, each enabled channel reports a 32-bit floating-point or 16-bit integer value to the CPU.

In the 16-bit integer mode, the low word of the 32-bit channel data area contains the 16-bit integer channel value. The high word (upper 16-bits) of the 32-bit value is set with the sign extension of the 16-bit integer. This sign-extended upper word allows the 16-bit integer to be read as a 32-bit integer type in logic without losing the sign of the integer. If the 16-bit integer result is negative, the upper word in the 32-bit channel data has the value 0xFFFF. If the 16-bit integer result is positive, the upper word is 0x0000.

Resolution and Range Types: ALG608 & ALG616

The actual resolution for each input depends on the Range Type and A/D Filter Frequency configured for that channel. At higher Filter Frequencies, input resolution decreases. The approximate resolution in bits for each Filter Frequency and Range Type are displayed in the following table.

Resolution (in bits)			
Filter Frequency	Range Type		
	±10 Vdc	0 to 10 Vdc, ±5 Vdc, ±20 Vdc	0 to 5 Vdc, 1 to 5 Vdc, 0 to 20 mA, 4 to 20 mA
8 Hz	18	17	16
12 Hz	17	16	15
16 Hz	17	16	15
40 Hz	16	15	14
200 Hz	15	14	13
500 Hz	14	13	12

Channel Scanning: ALG608 & ALG616

These modules use 4 A/D converters to achieve the fastest possible channel scan times. Module has up to four acquisition cycles for each module scan. The acquisition cycles and channels acquired during each cycle are:

Acquisition Cycle	Channels Acquired	
	IC695ALG608	IC695ALG616
1	1, 5	1, 5, 9, 13
2	2, 6	2, 6, 10, 14
3	3, 7	3, 7, 11, 15
4	4, 8	4, 8, 12, 16

To bypass an acquisition cycle, all channels that would be acquired during that cycle must be disabled.

For fastest scan times, always wire by acquisition cycle. For example, if only eight channels were used on the 16-channel module, IC695ALG616, channels 1, 2, 5, 6, 9, 10, 13, and 14 should be used for optimum performance.

Channel Diagnostic Data: ALG608 and ALG616

In addition to the input data from field devices, Module can be configured to report channel diagnostics status data to the CPU. The CPU stores this data at the *Diagnostic Reference Address* configured for Module. The use of this feature is optional.

The diagnostics data for each channel occupies two words (whether the channel is used or not):

Diagnostic Reference Address	Contains Diagnostics Data for:
+0, 1	Channel 1
+2, 3	Channel 2
+4, 5	Channel 3
+6, 7	Channel 4
+8, 9	Channel 5
+10, 11	Channel 6
+12, 13	Channel 7
+14, 15	Channel 8
For Module IC695ALG616 Only:	
+16, 17	Channel 9
+18, 19	Channel 10
+20, 21	Channel 11
+22, 23	Channel 12
+24, 25	Channel 13
+26, 27	Channel 14
+28, 29	Channel 15
+30, 31	Channel 16

When a diagnostic bit equals 1, the alarm or fault condition is present on the channel. When a bit equals 0 the alarm or fault condition is either not present or detection is not enabled in the configuration for that channel.

For each channel, the format of this data is:

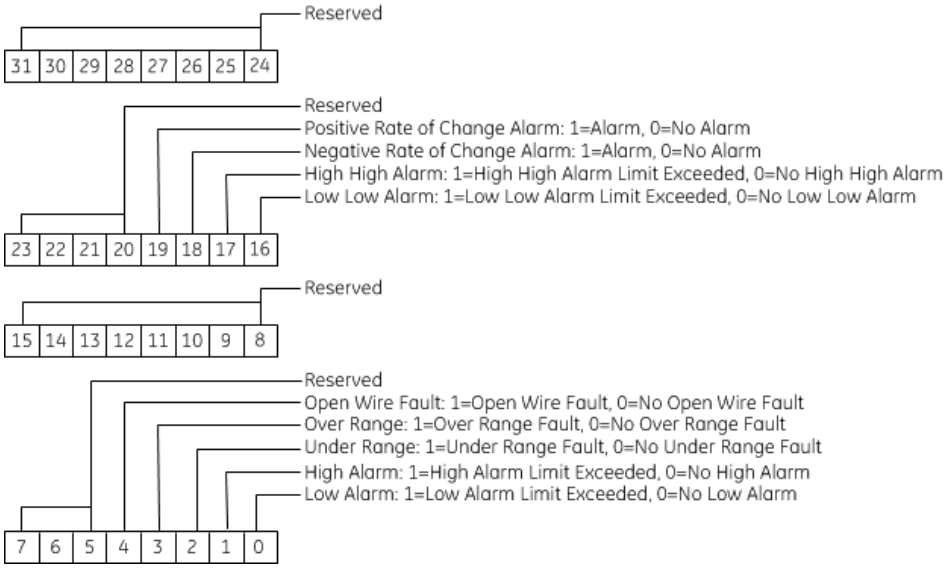

Module Status Data: ALG608 & ALG616

Module can also optionally be configured to return two bits of module status data to the CPU. The CPU stores this data in the 32-bit *Module Status Data* reference area configured for Module.

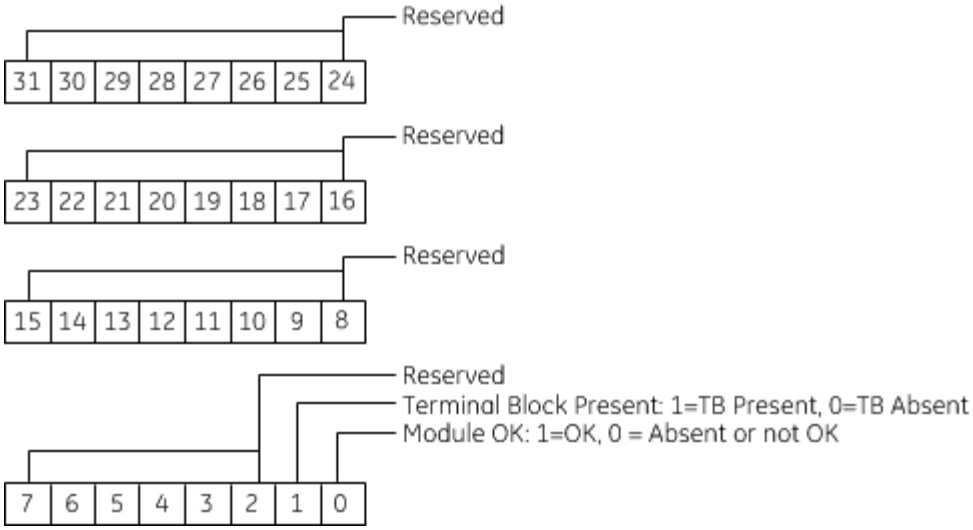

Terminal Block Detection

Module automatically checks for the presence of a Terminal Block.

The TB LED indicates the state of the terminal block of Module. It is green when the Terminal Block is present or red if it is not.

Faults are automatically logged in the CPU I/O Fault table when the terminal block is inserted or removed from a configured module in the system. The fault type is Field Fault, and the fault description indicates whether the fault is a "Loss of terminal block" or an "Addition of terminal block". If a Terminal Block is not present while a configuration is being stored, a "Loss of terminal block" fault is logged.

Bit 1 of Module Status Reference indicates the status of the terminal block. To enable Module Status reporting, Module Status Reference must be configured. During operation, the PLC must be in an I/O Enabled mode for the current Module Status to be scanned and updated in reference memory.

9.8.7 Field Wiring: ALG608 & ALG616, Single-Ended Mode

The following table lists wiring connections for Non-Isolated Analog Input Modules in Single-ended mode. The single-ended mode is the configured default operating mode.

Terminal	IC695ALG608	IC695ALG616	IC695ALG608	IC695ALG616	Terminal
1	Channel 1 IN+		Channel 1 Current Return (IRTN1)		19
2	Channel 2 IN+		Channel 2 Current Return (IRTN2)		20
3	Channel 3 IN+		Channel 3 Current Return (IRTN3)		21
4	Channel 4 IN+		Channel 4 Current Return (IRTN4)		22
5	Common		Common		23
6	Channel 5 IN+		Channel 5 Current Return (IRTN5)		24
7	Channel 6 IN+		Channel 6 Current Return (IRTN6)		25
8	Channel 7 IN+		Channel 7 Current Return (IRTN7)		26
9	Channel 8 IN+		Channel 8 Current Return (IRTN8)		27
10	No Connection	Channel 9 IN+	No Connection	Channel 9 Current Return (IRTN9)	28
11	No Connection	Channel 10 IN+	No Connection	Channel 10 Current Return (IRTN10)	29
12	No Connection	Channel 11 IN+	No Connection	Channel 11 Current Return (IRTN11)	30
13	No Connection	Channel 12 IN+	No Connection	Channel 12 Current Return (IRTN12)	31
14	Common		Common		32

Terminal	IC695ALG608	IC695ALG616	IC695ALG608	IC695ALG616	Terminal
15	No Connection	Channel 13 IN+	No Connection	Channel 13 Current Return (IRTN13)	33
16	No Connection	Channel 14 IN+	No Connection	Channel 14 Current Return (IRTN14)	34
17	No Connection	Channel 15 IN+	No Connection	Channel 15 Current Return (IRTN15)	35
18	No Connection	Channel 16 IN+	No Connection	Channel 16 Current Return (IRTN16)	36

There are no shield terminals on these modules. For shielding, tie the cable shields to the ground bar along the bottom of the backplane. M3 tapped holes are provided for this purpose.

All the common terminals are connected together internally, so any common terminal can be used for the negative lead of the external power supply.

Figure 301: Field Wiring, Single-Ended ALG608 or ALG616

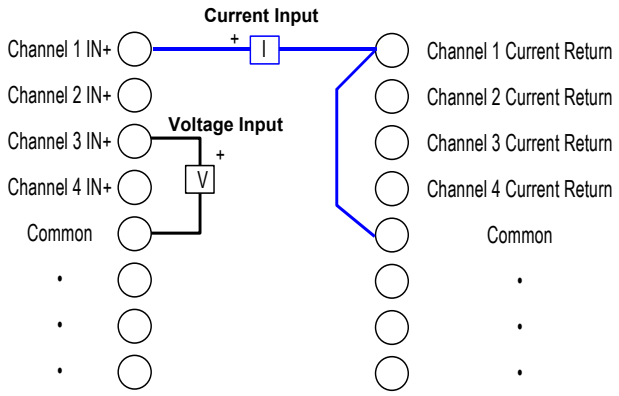

For single-ended mode, a voltage input should be connected between its Channel IN+ terminal and a Common (CM) return terminal.

A current input should be connected between its Channel IN+ terminal and its Channel Current Return Terminal. In addition, a jumper wire should be connected between the Channel Current Return terminal and a Common (COM) return.

9.8.8 Field Wiring: ALG608 & ALG616, Differential Mode

The following table lists wiring connections for Non-Isolated Analog Input Modules configured for Differential mode.

Terminal	IC695ALG608	IC695ALG616	IC695ALG608	IC695ALG616	Terminal
1	Channel 1 IN+		Channel 1 Current Return (IRTN1)		19
2	Channel 1 IN -		No Connection		20
3	Channel 2 IN+		Channel 2 Current Return (IRTN3)		21
4	Channel 2 IN -		No Connection		22
5	Common		Common		23
6	Channel 3 IN+		Channel 3 Current Return (IRTN5)		24
7	Channel 3 IN-		No Connection		25
8	Channel 4 IN+		Channel 4 Current Return (IRTN7)		26
9	Channel 4 IN-		No Connection		27
10	No Connection	Channel 5 IN+	No Connection	Channel 5 Current Return (IRTN9)	28
11	No Connection	Channel 5 IN-	No Connection		29
12	No Connection	Channel 6 IN+	No Connection	Channel 6 Current Return (IRTN11)	30
13	No Connection	Channel 6 IN-	No Connection		31
14	Common		Common		32
15	No Connection	Channel 7 IN+	No Connection	Channel 7 Current Return (IRTN13)	33
16	No Connection	Channel 7 IN-	No Connection		34
17	No Connection	Channel 8 IN+	No Connection	Channel 8 Current Return (IRTN15)	35
18	No Connection	Channel 8 IN-	No Connection		36

There are no shield terminals on these modules. For shielding, tie the cable shields to the ground bar along the bottom of the backplane. M3 tapped holes are provided for this purpose.

All the common terminals are connected together internally, so any common terminal can be used for the negative lead of the external power supply.

Figure 302: Field Wiring, Differential Mode ALG608 or ALG616

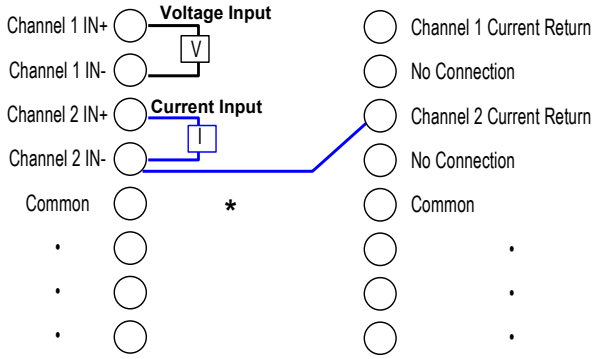

* Keep this jumper as short as possible to minimize error due to the added resistance of the wire. This resistance should be 25mΩ or less.

For differential inputs, two adjacent terminals are connected as one channel. The lower-numbered terminal acts as the high side.

Voltage input is connected between the two adjacent Channel IN terminals, as shown in Figure 302.

A current input is connected between the Channel IN+ and Current Return terminals for that channel. In addition, a jumper wire must be connected between the Channel IN - terminal and the corresponding Channel Current Return terminal.

Tie common to signal ground for improved channel-to-channel Crosstalk immunity.

Two-door cards are provided with Module: one shows connections for single-ended mode and the other shows connections for differential mode. Insert the card that matches the wiring that will be used.

Section 10: Analog Output Modules

This chapter describes Analog Output modules for PACSystems RX3i controllers.

Analog Output Module Description	Catalog Number	Section
Analog Output 2-Channel Voltage	IC694ALG390	10.1
Analog Output 2-Channel Current	IC694ALG391	10.2
Analog Output 8-Channel Current/Voltage	IC694ALG392	10.3
Analog Output 4-Channel Current/Voltage	IC695ALG704	10.4
Analog Output 8-Channel Current/Voltage	IC695ALG708	10.5
Analog Output 8-Channel Current/Voltage Isolated	IC695ALG808	10.5

10.1 Analog Output Module Voltage 2-Channel: IC694ALG390

Figure 303: IC694ALG390

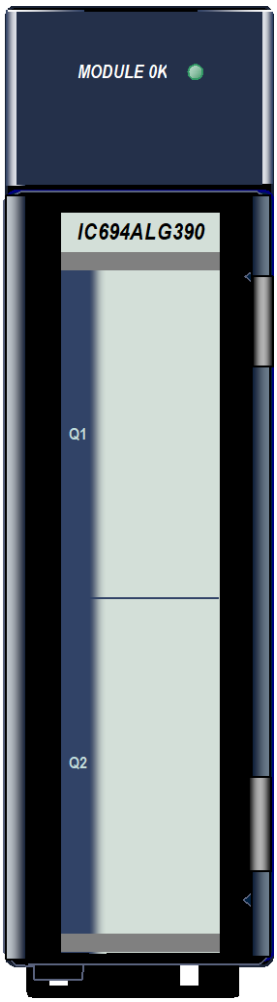

The ***2–Channel Analog Voltage Output*** module, IC694ALG390, has two output channels, each capable of converting 13 bits of binary (digital) data to an analog output signal for field devices. The Analog Voltage Output module provides outputs in the range of -10 to +10 V. Both channels are updated on every scan.

The outputs on this module can be set up to either *Default to 0 volts* or *Hold-Last-State* if the CPU goes to the Stop mode or Reset. Selection of the output default state is made by a jumper on Module. If the jumper is not installed, the outputs *Hold the Last State*.

This module can be installed in any I/O slot in an RX3i system.

Module does not support insertion into or removal from an RX3i Universal Backplane which is under power (see *Hot Insertion and Removal Not Supported*).

10.1.1 Isolated +24 Vdc Power

If Module is located in an RX3i Universal Backplane, an external source of Isolated +24 Vdc is required to provide power for Module. The external source can be connected via the TB1 connector on the left side of the backplane or directly on the terminal block of this module.

If this module is located in an Expansion or Remote backplane, its primary power source can be either the Isolated +24 Vdc from the backplane power supply or an external Isolated +24 Vdc power supply connected to the terminal block of this module. If the external source is set between 27.5-30 Vdc, it takes over the load from the Isolated 24 Vdc system supply. Note that an external source should be used if it is desired to maintain hold last state operation during a loss of backplane power.

10.1.2 LED

Module **OK** LED is ON when Module power supply is operating.

10.1.4 Specifications: ALG390

ALG390	Specifications
Voltage Range	-10 to +10 V
Calibration	Factory calibrated to 2.5 mV per count
Supply Voltage (nominal)	+24 Vdc, from isolated +24 Vdc on the backplane or user-supplied voltage source, and +5 Vdc from the backplane
External Supply Voltage Range	18 to 30 Vdc
External Supply Voltage Ripple	10%
Update Rate	Approximately 5 ms (both channels) The update rate is application dependent.
Resolution	2.5 mV (1 LSB = 2.5 mV)
Absolute Accuracy[62]	±5 mV at 25°C (77°F)
Offset	1 mV maximum, 0°C to 60°C (32°F to 140°F)
Output Loading (maximum)	5 mA (2 kΩ minimum resistance)
Output Load Capacitance	2000 pF, maximum
Isolation, Field to Backplane (optical), and frame ground	250 Vac continuous; 1500 Vdc for 1 minute
Internal Power Consumption	32 mA from +5 Vdc supply 120 mA from +24 Vdc supply (isolated backplane or user supply)

For product standards and general specifications, refer to Appendix A:.

10.1.5 Module Data: ALG390

Module data is stored by the PLC CPU in 16–bit 2’s complement format:

MSB LSB

+/-	10	9	8	7	6	5	4	3	2	1	0	X	X	X	X

The resolution of the converted signal is a 12-bit binary plus sign, which is effectively 13 bits (1 part in 8192). Module scales the digital data to create an output voltage for the output:

[62] *In the presence of severe RF interference (IEC 801–3, 10V/m), accuracy may be degraded to ±50 mV.*

D/A Bits versus Output Voltage

Figure 304: D/A Bits versus Output Voltage

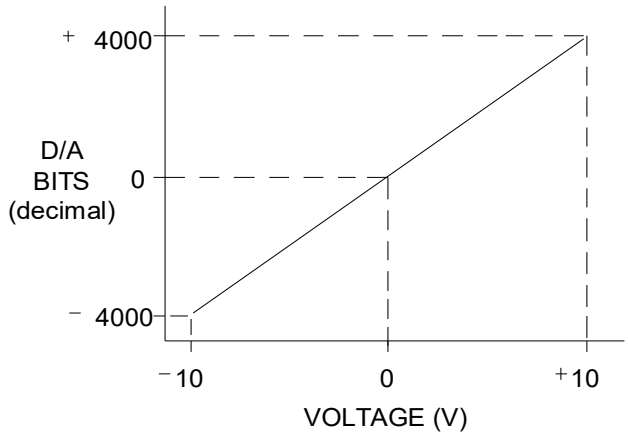

Scaling: ALG390

The scaling of the output is displayed in the following figure.

Figure 305: Scaling Units versus Output Voltage

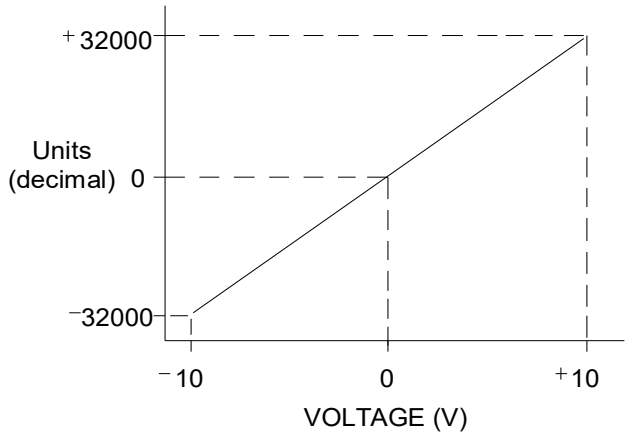

10.1.6 Field Wiring: ALG390

Figure 306: Field Wiring ALG390

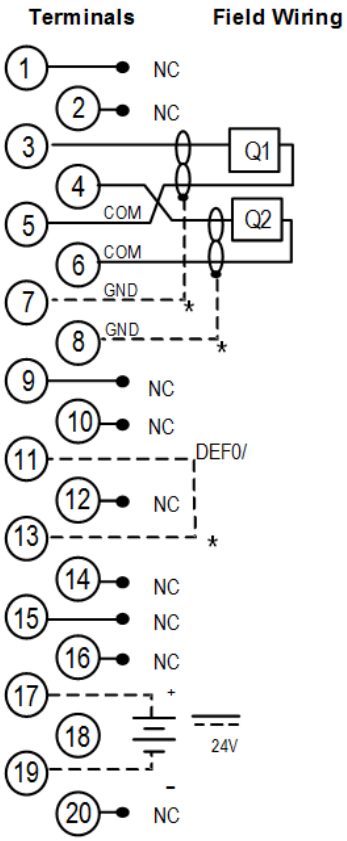

*Optional Connections

Terminal	Connection
1	No connection
2	No connection
3	Output 1
4	Output 2
5	Output 1 Common
6	Output 2 Common
7	Shield termination point for output 1
8	Shield termination point for output 2
9	No connection
10	No connection
11 - 13	Output default selection jumper
12	No connection
14	No connection
15	No connection
16	No connection
17	External +24 Vdc Power Supply +
18	No connection
19	External +24 Vdc Power Supply -
20	No connection

To minimize capacitive loading and noise, all field connections should be wired using a good grade of twisted, shielded instrumentation cable. The shields should be connected to GND on the user terminal connector block. The GND connection provides access to the backplane (frame ground) resulting in superior rejection of noise caused by any shield drain currents.

DEF0 is the optional Output Default Jumper. It determines the operation of both outputs when the CPU is in Stop or Reset mode. The jumper should be installed if outputs should default to 0. The jumper should not be installed if outputs should hold their last state (the last valid commanded value received from the CPU).

An optional external +24 Vdc supply can be installed as shown.

10.2 Analog Output Module Current 2-Channel: IC694ALG391

Figure 307: IC694ALG391

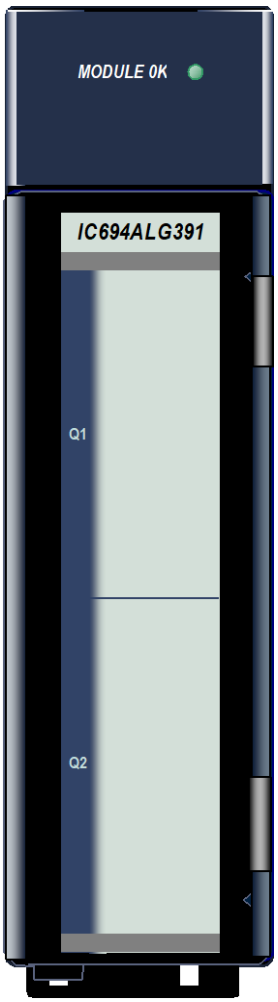

The ***2–Channel Analog Current Output*** module, IC694ALG391, has two output channels, each capable of converting 12 bits of binary (digital) data to an analog output signal for field devices. Each output can be set using a jumper on Module to produce output signals in one of two ranges:

- 0 to 20 mA
- 4 to 20 mA.

Each output may also be set up as a less accurate voltage source. The selection of current or voltage output is made with a jumper or resistor on Module terminals. Both channels are updated on every scan.

The outputs on this module can be set up to either *Default to 0/4 mA* or *Hold–Last–State* if the CPU goes to the Stop mode or Reset. Selection of the output default state is made by a jumper on the terminal board of this module. Refer to Output Defaults in this section for more information.

Module does not support insertion into or removal from an RX3i Universal Backplane which is under power (see *Hot Insertion and Removal Not Supported*).

10.2.1 Isolated +24 Vdc Power

If Module is located in an RX3i Universal Backplane, an external source of Isolated +24 Vdc is required to provide power for Module. The external source can be connected via the TB1 connector on the left side of the backplane or directly on the terminal block of this module.

If this module is located in an Expansion or Remote backplane, its primary power source can be either the Isolated +24 Vdc from the backplane power supply or an external Isolated +24 Vdc power supply connected to the terminal block of this module. If the external source is set between 27.5-30 Vdc, it takes over the load from the Isolated 24 Vdc system supply. Note that an external source should be used if it is desired to maintain hold last state operation during a loss of backplane power.

10.2.2 LED

Module **OK** LED is ON when Module power supply is operating.

10.2.4 Specifications: ALG391

ALG391	Specifications
Output Current Range	4 to 20 mA and 0 to 20 mA
Output Voltage Range	1 to 5 V and 0 to 5 V
Calibration	Factory calibrated to 4 µA per count
External Supply Voltage Range	20 to 30 Vdc. Depends on the current load and the ambient temperature as displayed in Figure 308.
External Supply Voltage Ripple	10%
Update Rate	5 ms (approximate, both channels) Application dependent.
Resolution:	
4 to 20mA 0 to 20mA 1 to 5V 0 to 5V	4 µA (1 LSB = 4 µA) 5 µA (1 LSB = 5 µA) 1 mV (1 LSB = 1 mV) 1.25 mV (1 LSB = 1.25 mV)
Absolute Accuracy:[63]	
4 to 20mA 0 to 20mA 1 to 5V 0 to 5V	±8 µA at 25°C (77°F) ±10 µA at 25°C (77°F) ±50 mV at 25°C (77°F) ±50 mV at 25°C (77°F)
Maximum Compliance Voltage	25 Vdc
User Load (current mode)	0 to 850 Ω
Output Load Capacitance (current mode)	2000 pF
Output Load Inductance (current mode)	1 H
Maximum Output Loading (voltage mode)	5 mA (2kΩ minimum resistance) (2000 pF maximum capacitance)
Isolation, Field to Backplane (optical), and to frame ground	250 Vac continuous; 1500 Vdc for 1 minute
Internal Power Consumption	30 mA from +5 Vdc supply
	215 mA from Isolated +24 Vdc supply

For product standards and general specifications, refer to Appendix A:.

[63] *In the presence of severe RF interference (IEC 801–3, 10 V/m), accuracy may be degraded to ±80µA (4 to 20 mA range), ±100µA (0 to 20 mA range).*

10.2.5 Load Current Derating

Figure 308: Derating Curve ALG391

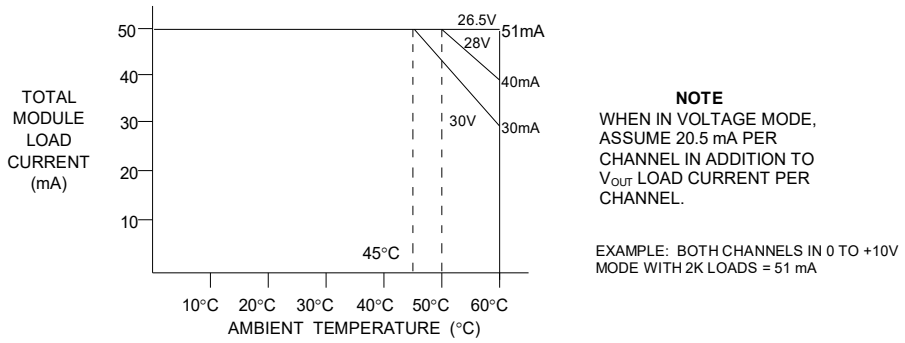

10.2.6 Module Data: ALG391

Module data is stored by the PLC CPU in 16–bit 2's complement format as displayed in the following figure.

MSB															LSB
X	11	10	9	8	7	6	5	4	3	2	1	0	X	X	X

The 13 most significant bits from the %AQ register are converted to sign-magnitude by the PLC and sent to Module.

D/A Bits versus Output Current

Module scales the output data received from the CPU according to the range selected for the channel.

Figure 309: Relationship between Output Value (%AQ) and Output Current: ALG391

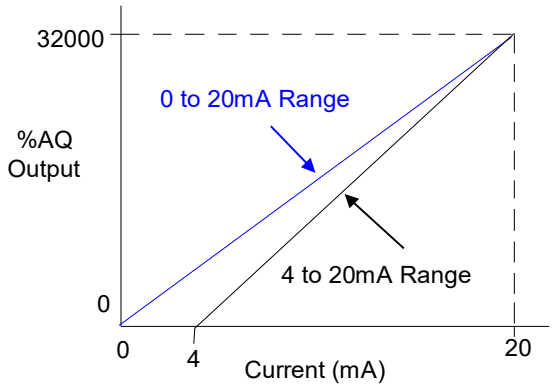

In the 4 to 20 mA range, Module scales output data with each 1000 counts representing 0.5 mA. In this range, a count of 0 corresponds to 4 mA and a count of 32000 corresponds to 20 mA.

In the 0 to 20 mA range, Module scales output data so that each 800 counts represent 0.5 mA. In this range, a count of 0 corresponds to 0 mA and a count of 32000 corresponds to 20 mA with each 800 counts representing 0.5 mA.

If Module receives negative data from the CPU, it outputs the low end of the range (either 0 mA or 4 mA). If a value greater than 32767 is received, it is not accepted.

10.2.7 Field Wiring: ALG391

To minimize the capacitive loading and noise, all field connections to Module should be wired using a good grade of twisted, shielded instrumentation cable. The shields should be connected to GND on the user terminal connector block. The GND connection provides access to the backplane (frame ground) resulting in superior rejection of noise caused by any shield drain currents. If no jumper is installed, Module performs as a current source. If the jumper is present, Module performs as a voltage source.

Figure 310: Field Wiring ALG391

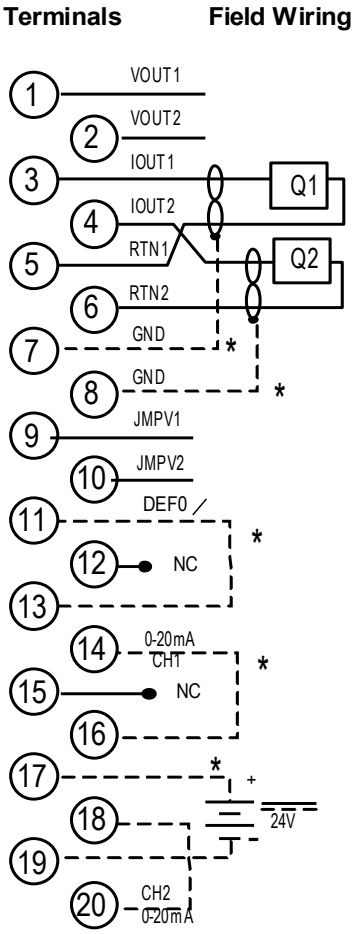

*Optional Connections

In this example, Output 1 is used as a voltage output (JMPV1 connected to IOUT1) in the 0 to 5 V range (RANGE 1 jumper installed) Output 2 is used as a current output (JMPV2 not connected) in the 4 to 20 mA mode (RANGE2 jumper not installed). Both outputs will Hold Last State (no Output Default jumper installed, external +24 Vdc power supply connected).

Figure 311: Wiring Example ALG391

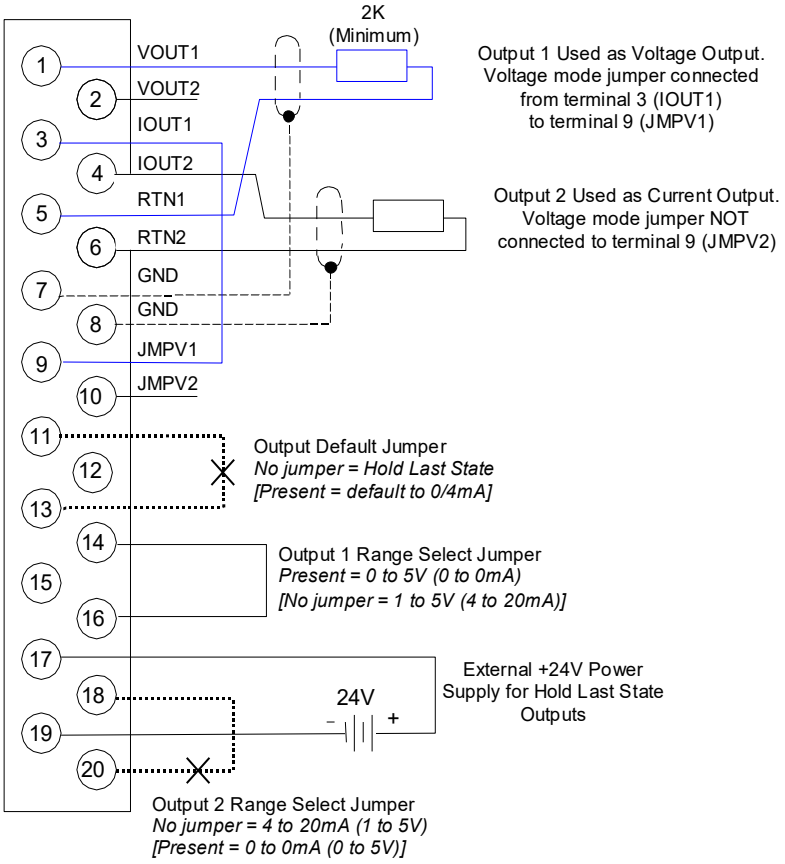

Current or Voltage Outputs

The range of each channel and its operation in current or voltage mode are set with jumpers on Module terminals. For voltage operation, a 250 Ω resistor can be used instead of a voltage jumper to increase the voltage range. The following table lists the output ranges that can be set up for each output, and the jumper or resistor settings for each range.

Range of the Output	Range Jumper Installed	Voltage Jumper or Resistor Installed
4 to 20 mA	No	No
0 to 20 mA	Yes	No
0 to 5 Vdc	Yes	jumper
0 to 10 Vdc	Yes	250 Ω resistor
1 to 5 Vdc	No	jumper
2 to 10 Vdc	No	250 Ω resistor

Output Defaults

Both module outputs can be set to either Default to 0 or 4 mA or Hold Last State if the CPU goes to STOP mode or is Reset. The Output Default operation of this module is set using another jumper on the terminal block.

If the Output Default (DEF0/4) jumper is installed on module terminals 11 and 13, both outputs default to the low end of their ranges.

If the Output Default jumper is not installed, both outputs hold the last valid output value received from the PLC CPU. This option requires an external +24 Vdc power supply to maintain output power when the system power goes down.

10.3 Analog Output Module Current/Voltage 8-Channel: IC694ALG392

Figure 312: IC694ALG392

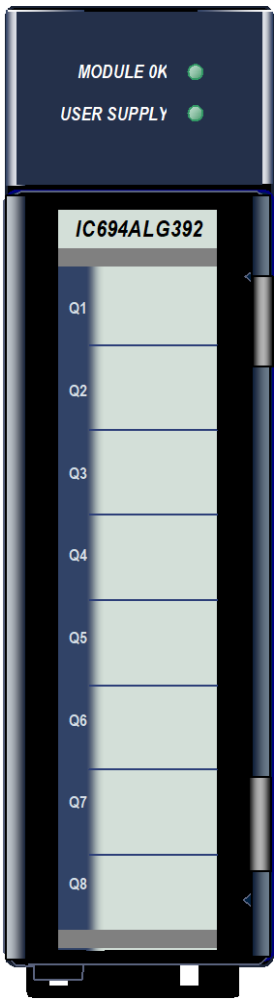

The ***8–Channel Analog Current/Voltage Output*** module; IC694ALG392, provides up to eight single-ended output channels with current loop outputs and/or voltage outputs. Each output channel can be set up using the configuration software for any of these ranges:

- 0 to +10 V (unipolar)
- 10 to +10 V (bipolar)
- 0 to 20 mA
- 4 to 20 mA

Each channel is capable of converting 15 to 16 bits (depending on the range selected) of binary data to an analog output. All eight channels are updated every 12 ms.

In current modes, Module reports an Open Wire fault to the CPU for each channel. Module can go to a known last state when system power is interrupted. As long as external power is applied to Module, each output will maintain its last value or reset to zero, as configured.

This module can be installed in any I/O slot of an RX3i system.

Module supports insertion into and removal from an RX3i Universal Backplane which is under power. Refer Section 2.6.4, *Hot Insertion and Removal*.

Module supports firmware upgrades using the WinLoader software utility (if the host CPU has a serial port) or using a Web-based tool (if the host CPU has no serial port). Instructions are included with the firmware upgrade kit.[25]

10.3.1 Isolated +24 Vdc Power

Module must receive its 24 Vdc power from an external source.

If Module is located in an RX3i Universal Backplane, the external source can be connected via the TB1 connector on the left side of the backplane or directly to Module terminal block.

If this module is located in an Expansion or Remote backplane, the external source must be connected to the terminal block of this module.

10.3.2 LEDs: ALG392

Module **OK** LED indicates module status. The **User Supply** LED indicates whether the external +24 Vdc power supply is present and is above the minimum level. Both LEDs are powered from the +5 Vdc backplane power bus.

LED	Indicates
Module OK	ON: Module OK and configured Flashing: Module OK but not configured OFF: Module is defective or no +5 V backplane power present
User Supply	ON: External power supply present OFF: No user power

10.3.3 Specifications: ALG392

ALG392	Specifications
Number of Output Channels	1 to 8 selectable, single-ended
Output Current Range	4 to 20 mA and 0 to 20 mA
Output Voltage Range	0 to 10 V and –10 to +10 V
Calibration	Factory calibrated to .625 µA for 0 to 20 mA; 0.5 µA for 4 to 20 mA; and .3125 mV for voltage (per count)
User Supply Voltage (nominal)	+24 Vdc, from user-supplied voltage source
External Supply Voltage Range	20 to 30 Vdc
Power Supply Rejection Ratio (PSRR) Current Voltage	 5 µA/V (typical), 10 µA/V (maximum) 25 mV/V (typical), 50 mV/V (maximum)
External Power Supply Voltage Ripple	10% (maximum)
Internal Supply Voltage	+5 Vdc from PLC backplane
Update Rate	8 ms (approximate, all eight channels) Determined by I/O scan time, application dependent.
Resolution:	**4 to 20 mA:** 0.5 µA (1 LSB = 0.5 µA) **0 to 20 mA:** 0.625 µA (1 LSB = 0.625 µA) **0 to 10 Vdc:** 0.3125 mV (1 LSB = 0.3125 mV) **-10 to +10 Vdc:** 0.3125 mV (1 LSB = 0.3125 mV)
Absolute Accuracy:[64]	
Current Mode	±0.1% of full scale at 25°C (77°F), typical ±0.25% of full scale at 25°C (77°F), maximum ±0.5% of full scale over operating temperature range (maximum)
Voltage Mode	±0.25% of full scale at 25°C (77°F), typical ±0.5% of full scale at 25°C (77°F), maximum ±1.0% of full scale over operating temperature range (maximum)
Maximum Compliance Voltage	V_{USER} –3 V (minimum) to V_{USER} (maximum)
User Load (current mode)	0 to 850 Ω (minimum at V_{USER} = 20 V, maximum 1350 Ω at V_{USER} = 30 V) (Load less than 800 Ω is temperature dependent.)
Output Load Capacitance (current mode)	2000 pF (maximum)
Output Load Inductance (current mode)	1 H
Output Loading (voltage mode) Output load Capacitance	5 mA (2 kΩ minimum resistance) (1 µF maximum capacitance)
Isolation, Field to Backplane (optical) and to frame ground	250 Vac continuous; 1500 Vdc for 1 minute
Power Consumption	110 mA from +5 Vdc PLC backplane supply 315 mA from +24 Vdc user supply

For product standards and general specifications, refer to Appendix A:.

[64] *In the presence of severe RF interference (IEC 801–3, 10V/m), accuracy may be degraded to ±1% full scale (FS) for current outputs and ±3% FS for voltage outputs.*

In order to meet the IEC 1000-4-3 levels for RF Susceptibility specified in Appendix A. When this module is present, the system must be mounted in a metal enclosure.

Derating Graphs: ALG392

For maximum performance and module life, Module should be operated at maximum load resistance to offload heat. Module thermal derating depends on the voltage level and the use of current and voltage outputs. The first two charts (in Figure 313 below) show the maximum ambient temperature for current-only modules at 30 Vdc and at 26.5 Vdc, respectively.

Current Outputs Only

Figure 313: Derating for Current Outputs: ALG392

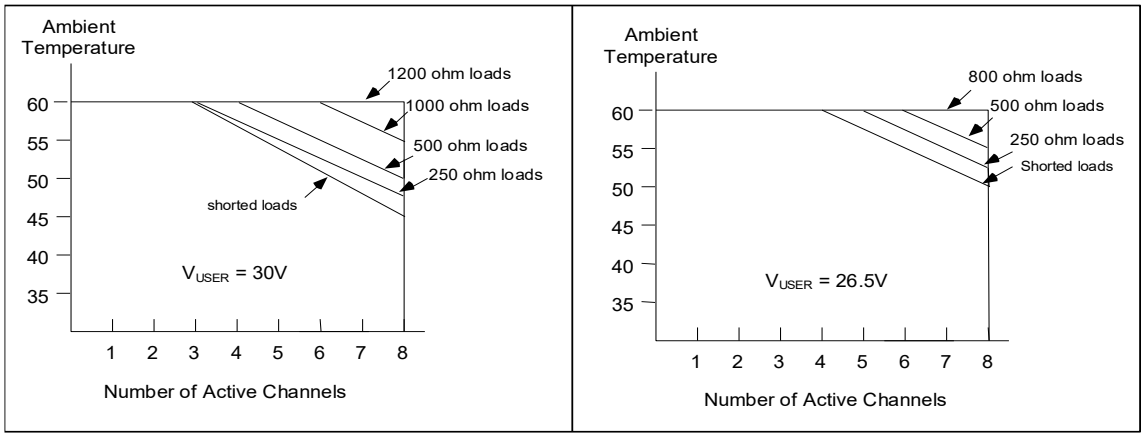

Mixed Current and Voltage Outputs

In the derating graphs displayed in Figure 314, voltage channels have 2 kΩ loads and current channels have shorted loads. To determine the maximum operating temperature for mixed current and voltage outputs, select the line in the chart below that corresponds to the number of voltage channels being used. For example, a module uses two voltage channels and three current channels. The total channels in use are five, so, from Figure 314, the maximum operating temperature is approximately 52.5°C:

Figure 314: Derating for Mixed Current & Voltage Outputs: ALG392

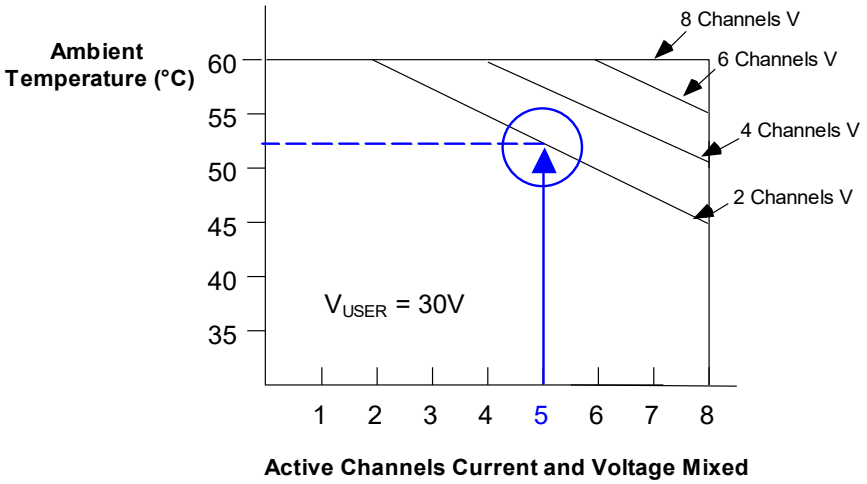

10.3.4 Current and Voltage Ranges and Resolution: ALG392

In the 4 to 20 mA range Module scans output data from the PLC so that 4 mA corresponds to a count of 0, and 20 mA corresponds to a count of 32000. In the 0 to 20 mA range, user data is scaled so that 0 mA corresponds to a count of 0 and 20 mA corresponds to 32000. In 0 to 20 mA mode, a value up to 32767 provides a maximum output of approximately 20.5 mA. In current mode, Module also reports an open loop fault to the PLC.

For voltage operation in the default unipolar mode (0 to +10 V), data is scaled so that 0 volts corresponds to a count of 0 and +10 V corresponds

to a count of 32000. In this mode, a value up to 32767 creates an over-range output of approximately 10.24 V.

In the -10 to +10 V range, data is scaled so that -10 V corresponds to a count of -32000 and +10 V corresponds to a count of +32000. In this range, output values from -32767 to +32767 result in an over-range of approximately -10.24 to +10.24 V.

Scaling for both current and voltage ranges is displayed in the following figure.

Figure 315: Scaling for Current Modes: ALG392

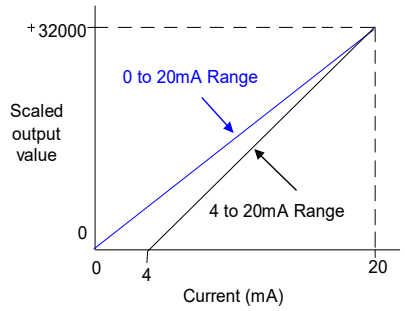

Figure 316: Scaling for Voltage Modes: ALG392

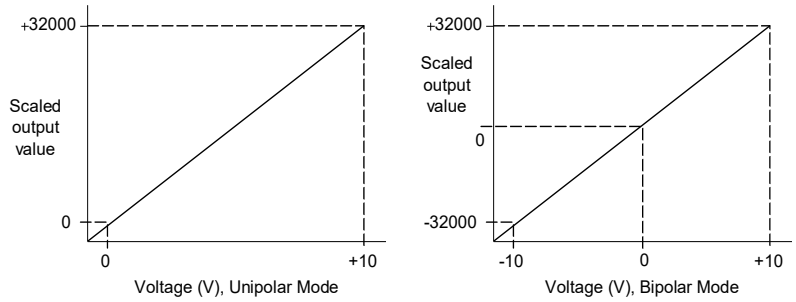

The resolution per bit depends on the configured range of that channel:

4 to 20 mA:	0.5 µA
0 to 20 mA:	0.625 µA
0 to 10 Vdc:	0.3125 mV
-10 to +10 Vdc:	0.3125 mV

10.3.5 Module Data: ALG392

Module ALG392 uses up to eight output reference words. Each channel provides 16 bits of analog output data as an integer value. Output resolution is 15 bits except for the bipolar voltage mode, which has 16-bit resolution. The 16th bit is the sign bit.

Range	Resolution	Range Limits
0 to 20 mA	15 bits	0 to 32767
4 to 20 mA	15 bits	0 to 32767[65]
0 to 10 Vdc	15 bits	0 to 32767
-10 to 10 Vdc	16 bits	- 32768 to 32767

Status Data: ALG392

This module uses either 8 or 16 discrete input bits, as configured. The lower 8 bits are used for module status information as displayed in the following figure.

In current mode, individual channels can also report Broken Wire diagnostics. Those diagnostics are reported in the upper eight bits, as shown:

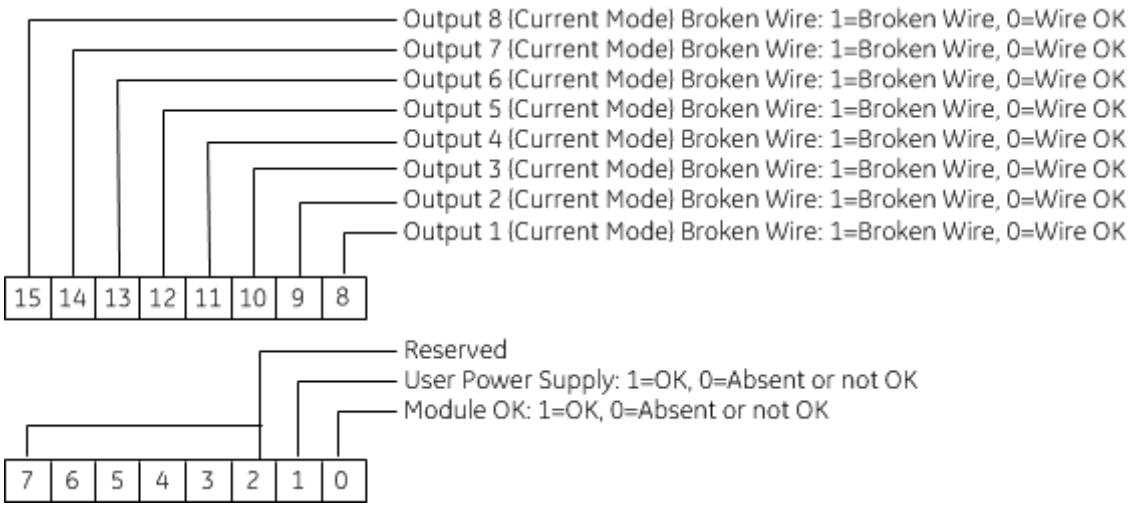

[65] *In 4-20 mA mode, if the PLC CPU sends a channel a value that is greater than 32000, Module uses the value 32000 instead.*

10.3.6 Field Wiring: ALG392

Terminal	Signal Name	Signal Definition
1	24VIN	User-supplied +24 Vdc Input
2	V CH 1	Channel 1 Voltage Output
3	I CH 1	Channel 1 Current Output
4	V CH 2	Channel 2 Voltage Output
5	I CH 2	Channel 2 Current Output
6	V CH 3	Channel 3 Voltage Output
7	I CH 3	Channel 3 Current Output
8	V CH 4	Channel 4 Voltage Output
9	I CH 4	Channel 4 Current Output
10	V CH 5	Channel 5 Voltage Output
11	I CH 5	Channel 5 Current Output
12	V CH 6	Channel 6 Voltage Output
13	I CH 6	Channel 6 Current Output
14	V CH 7	Channel 7 Voltage Output
15	I CH 7	Channel 7 Current Output
16	V CH 8	Channel 8 Voltage Output
17	I CH 8	Channel 8 Current Output
18	V COM	Voltage Common
19	I COM	Current Common/User +24 Vdc Return
20	GND	Frame ground connection for cable shields

Figure 317: Field Wiring ALG392

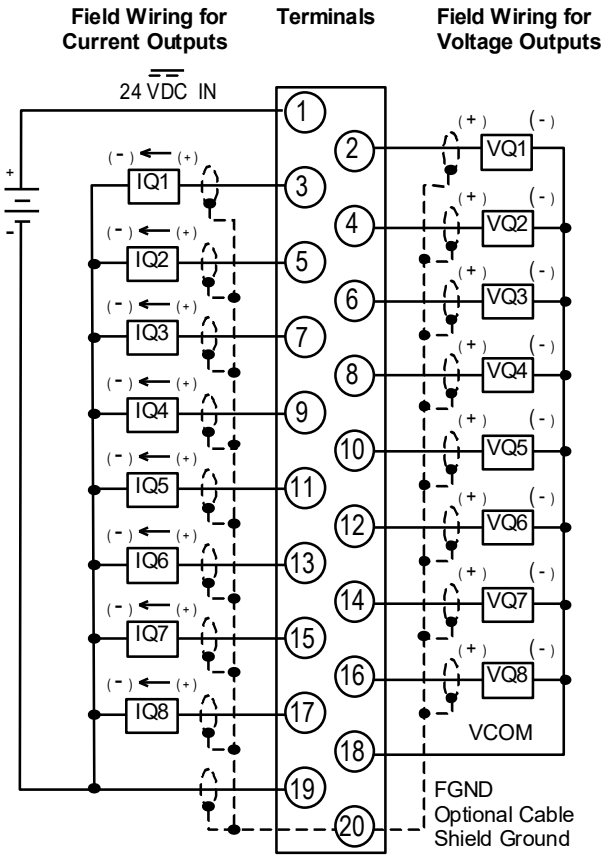

Figure 317 shows connections for current and voltage outputs. Each channel can be configured to operate as a voltage output or a current output - not both simultaneously.

10.3.7 Configuration: ALG392

Parameter	Description	Values	Default Values
Active Channels	Number of channels scanned	1 through 8	1
Reference Address for Module Output Data	Starting address for %AQ reference type	standard range	%AQ0001, or next highest available address
Reference Address for Channel Status Data	Starting address for %I reference type	standard range	%I00001, or next highest available address
Length	Number of %I status locations	8 or 16	8
STOP Mode	Output state when module toggled from RUN to STOP mode	Hold Last State or Default to Zero	Hold Last State
Output Channel Range	Type of Output Range	0, +10 Vdc ±10 Vdc 4, 20 mA 0, 20 mA	0, 10 Vdc

Active Channels indicates the number of channels that will be scanned by the PLC CPU.

The choice made for STOP Mode determines whether the outputs on this module will hold their last states or default to zero when the goes from RUN to STOP mode.

The %AQ Reference Address parameter selects the start of the area in the %AQ memory where the output data to Module will begin.

The %I Reference Address selects the start of the area in %I memory for the status data of this module. If the length is set to 8, then only module status will be reported. If the length is set to 16, channel status will also be reported for channels that are operating as current outputs.

Each channel can be set up to operate on one of four output ranges:

- 0 to 10 Vdc (default)
- -10 to +10 Vdc range
- 4 to 20 mA, and 0 to 20 mA
- 0 to 20 mA

10.4 Analog Output Module 4-Channel Current/Voltage: IC695ALG704 Analog Output Module 8-Channel Current/Voltage: IC695ALG708

Figure 318: IC695ALG708

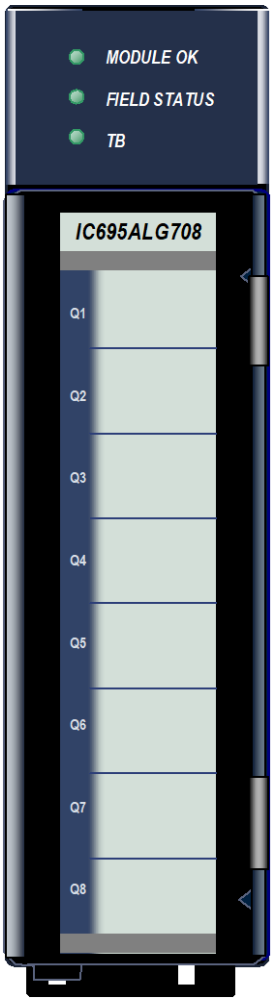

The ***Analog Current/Voltage Output*** module, IC695ALG704, provides four non-isolated configurable voltage or current output channels. The ***Analog Current/Voltage Output*** module, IC695ALG708 (Figure 318), provides eight non-isolated configurable voltage or current output channels.

Analog channels can be configured for these output ranges:

- Current: 0 to 20 mA, 4 to 20 mA
- Voltage: ± 10 Vdc, 0 to 10 Vdc

These modules can be used with a Box-style (IC694TBB032), Extended Box-style (IC694TBB132), Spring-style (IC694TBS032), or Extended Spring-style (IC694TBS132) Terminal Block. Extended terminal blocks provide the extra shroud depth needed for shielded wiring. Refer to Chapter 17 for more information about Terminal Blocks. Terminal Blocks are ordered separately.

These modules must be located in an RX3i Universal Backplane. They require an RX3i CPU with firmware version 3.0 or later. Machine Edition Version 5.0 SP3 Logic Developer-PLC or later must be used for configuration.

10.4.1 Isolated +24 Vdc Power

Module must receive its 24 Vdc power from an external source. The external source must be connected directly to the terminal block of this module. It cannot be connected via the TB1 connector on the RX3i Universal Backplane.

10.4.3 Features: ALG704 & ALG708

- Completely software-configurable, no module jumpers to set
- Individually enable or disable channels
- Clamping and Alarm Limits
- Latching of Alarms
- Configurable output bias
- Rapid channel acquisition times based on filter frequency
- Full auto-calibration
- On-board error-checking
- Configurable scaling and offsets per channel
- High alarm, low alarm, high-high alarm, low-low alarm detection and reporting selectable per channel
- Module fault reporting
- Configurable Hold Last State or Output Defaults
- Module supports insertion into and removal from an RX3i Universal Backplane which is under power. Refer to Section 2.6.4, *Hot Insertion and Removal*.

Module supports firmware upgrades using the WinLoader software utility (if the host CPU has a serial port) or using a Web-based tool (if the host CPU has no serial port). Instructions are included with the firmware upgrade kit.[25]

10.4.4 LEDs: ALG704 and ALG708

Module **OK** LED indicates module status. The **Field Status** LED indicates whether the external +24 Vdc power supply is present and is above the minimum level and whether or not faults are present. All LEDs are powered from the backplane power bus.

LED	Indicates
Module OK	ON Green: Module OK and configured. Quick Flashing Green: Module performing power-up sequence. Slow Flashing Green or Amber: Module OK but not configured. OFF: Module is defective or no backplane power present
Field Status	ON Green No faults on any enabled channel, Terminal Block is present, and field power is present. ON Amber and TB Green: Terminal Block is installed, fault on at least one channel, or field power is not present. ON Amber and TB Red: Terminal Block not fully removed, field power still detected. OFF and TB Red: Terminal block not present and no field power is detected.

TB	ON Red: Terminal block not present or not fully seated. Refer to above. ON Green: Terminal block is present. Refer to above. OFF: No backplane power to module.

10.4.6 Specifications: ALG704 and ALG708

ALG704/ALG708	Specifications
Output Ranges	Current: 0 to 20 mA, 4 to 20 mA Voltage: ± 10 Vdc, 0 to 10 Vdc
Backplane Power Requirements	ALG704/708-CB or earlier: 375 mA maximum at 3.3 V
	ALG704/708-DC or later: 250 mA maximum at 3.3 V
Power Dissipation within Module (V_{user}=24V)	IC695ALG704: 4.8 W maximum IC695ALG708: 7.25 W maximum
Thermal De-rating	IC695ALG704: None IC695ALG708: Voltage mode: none Current mode: Refer to Figure 319.
External Power Supply V_{user}	Voltage Range: +19.2 V to +30 Vdc Current required for ALG704: 150 mA maximum Current required for ALG708: 250 mA maximum
Resolution	±10 Vdc: 15.9 bits, 0 to 10 Vdc: 14.9 bits, 0 to 20 mA: 15.9 bits, 4 to 20 mA: 15.6 bits
Output Data Format	Configurable as floating-point IEEE 32-bit or 16-bit integer in a 32-bit field
Update Rate	8 ms (approximate, all eight channels) (Determined by I/O scan time, application dependent.)
Output Overvoltage Protection	Current outputs only: -30V for 60 seconds, +30V for one hour
Calibrated Accuracy[66]	Accurate to within 0.15% of full scale at 25°C Accurate to within 0.30% of full scale at 60°C
Output Load Reactance	Current: 10 µH maximum, Voltage: 1 µF maximum
Maximum Output Load	Current: 850 Ω maximum at V_{user} = 20V Voltage: 2 kΩ minimum
Output Gain Drift	Voltage output: 20 ppm per degree C typical Current output: 35 ppm per degree C typical
Output Settling Time	Voltage or current output: 2 ms, 0 to 95%.
Isolation, Field to Backplane	2550 Vdc for one second
Maximum Compliance Voltage	V_{user} – 3 V (minimum) to V_{user} (maximum)

For product standards and general specifications, refer to Appendix A:.

[66] *In the presence of severe RF interference (IC 801-3, 10V/m), accuracy may be degraded to ±1% FS.*

Thermal Derating, Current Mode: ALG708

Module IC695ALG704 has no thermal derating.

Module IC695ALG708 has no thermal derating in voltage mode.

Thermal derating for module IC695ALG708 in current mode is displayed in Figure 319.

Figure 319: Thermal Derating Curves for ALG708 at selected Voltage Levels (Current Mode only)

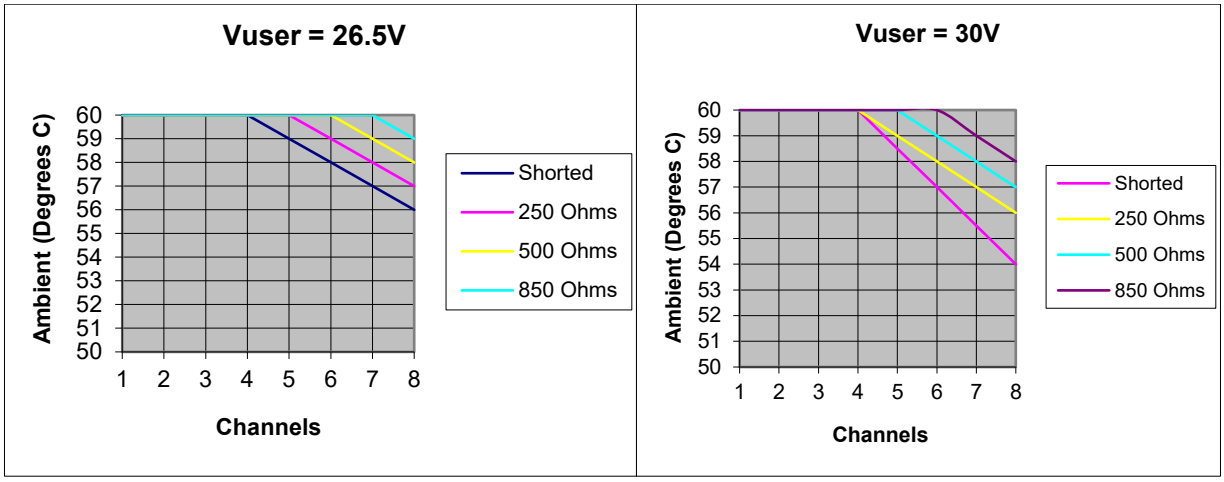

10.4.7 Configuration: ALG704 and ALG708

Module Parameters

Parameter	Default	Description
Outputs Reference Address	%AQxxxxx	Starting address for the output data of this module. This defaults to the next available %AQ block.
Outputs Reference Length	ALG704: 8 ALG708: 16	The number of words used for the output data of this module. This parameter cannot be changed.
Output Command Feedback Reference Address	%AIxxxxx	Stating address for the command feedback data of this module. This defaults to the next available %AI address after a non-zero length is configured.
Output Command Feedback Length	0	The number of words used for the command feedback data of this module. Length defaults to 0. It can be set to 8 or 16, depending on Module type being configured.
Diagnostic Reference Address	%Ixxxxx	Starting address for the channel diagnostics status data. This defaults to the next available %I block.
Diagnostic Reference Length	0	Read Only. The number of bit reference bits required for the Channel Diagnostics data. Default is 0, which means mapping of Channel Diagnostics is disabled. Change this to a non-zero value to enable Channel Diagnostics mapping. Maximum length is 128 bits for module IC695ALG704 or 256 bits for module IC695ALG708.
Module Status Reference Address	%Ixxxxx	Starting address for the status data of this module. This defaults to the next available %I block.
Module Status Reference Length	0	Read Only. The number of bits (0 or 32) required for Module Status data. Default is 0, which means mapping of Module Status data is disabled. Change this to a non-zero value to enable Module Status data mapping.

Analog Output Commanded Feedback

Module returns a copy of the analog output data received from CPU in its corresponding channel analog input shared memory. Output Feedback can be monitored to check the values being sent to the channels. The data is in the same scaled format as the output data for each channel. During normal operation, this feedback data should match the actual output data after one or more PLC scans of module inputs. During faults, ramping, over-range, and clamping conditions, the analog output data may differ from the commanded output.

Over-Temperature

If Over-Temperature is enabled, Module generates an Over-Temperature alarm if the internal temperature of this module is too great for the number of outputs that are on at the same time. In addition to the configurable options for Over-Temperature fault reporting and interrupts, an over temperature condition is also indicated by the Over-Temperature bit in the Status Reference data of this module. Detection of the Over-Temperature status bit is always enabled.

Module Parameters (Continued)

Parameter	Default	Description
I/O Scan Set	1	Assigns Module I/O status data to a scan set defined in the CPU configuration. Determines how often the RX3i polls the data
Channel Faults w/o Terminal Block	Disabled	Enabled / Disabled: Controls whether channel faults and configured alarm responses will be generated after a Terminal Block removal. The default setting of Disabled means channel faults and alarms are suppressed when the Terminal Block is removed. This parameter does not affect module faults including the Terminal Block loss/add fault generation.
Module Fault Reporting Enabled	Enabled	Enabled / Disabled. Controls whether Module will report faults resulting from either loss of field power or over-temperature conditions.
Field Power Removed Enabled	Enabled	Enabled / Disabled. With Module Fault Reporting enabled, this parameter controls reporting of Field Power Removed module faults.
Over Temp Enabled	Enabled	Enabled / Disabled. With Module Fault Reporting enabled, this parameter controls reporting of Over-temperature module faults.
Module Interrupt Reporting Enabled	Disabled	Enabled / Disabled.
Field Power Removed Enabled	Disabled	Enabled / Disabled. With Module Interrupt Reporting enabled, this parameter controls interrupts for Field Power Removed module faults.
Over Temp Enabled	Disabled	Enabled / Disabled. With Module Interrupt Reporting enabled, this parameter controls interrupts for Over-temperature module faults.
Range Type	Disabled Current	Sets up the type of output to be used for each channel. Choices are: Disabled Voltage, Disabled Current, Current/Voltage.
Range (Only for Range Type Current/Voltage)	-10 to +10 Vdc	For Current/Voltage: -10 to +10 Vdc, 0 to +10 Vdc, 4 to 20 mA, 0 to 20 mA.

Parameter	Default	Description
Channel Value Format	32-bit Floating-point	16-bit integer or 32-bit floating-point
Outputs Default	Force to Default Value	Controls the state the output will be set to in Outputs Disabled mode (stop), if a fault occurs, if power is lost, or if the configuration is cleared. Choices are Hold Last State, or default to a specific configured default value.

Range Type

Each channel on Module that will be used should be configured for Current/Voltage. Its voltage or current range and other parameters can then be configured as needed. If the channel output will not be used and is not wired, select either “Disabled” option. If a channel is disabled, it is not necessary to configure any of its other parameters.

If the channel is wired to a current output, but is not being used, select "Disabled Current". This will set the output current of that channel to 0mA (the output voltage of that channel will be non-zero).

If the channel is wired to a voltage output, but is not being used, select "Disabled Voltage". This will set the output voltage of that channel to 0V (the output current of that channel will be non-zero).

Output Defaults

If Hold Last State is enabled, an output will hold its last commanded value when the CPU indicates Outputs Not Enabled, or if one of the fault conditions listed below occurs. If Hold Last State is disabled, the output is commanded to go to the Default Value. The Default Value must be set within the selected output range. If both Default Value and Ramp Rate are enabled, the channel will ramp to the default value. Fault conditions are:

- CPU outputs are not enabled
- Backplane power is not ok. In that case, there is no ramping, even if ramping has been enabled.
- Loss of communications from CPU.
- Loss of I/O communications.
- Loss of field power.

Outputs Default Notes

- Hot Removal of Module in an I/O Enabled mode will cause all outputs to Hold Last State (even channels configured for Force to Default Value). If that operation is not desirable, the outputs can be forced to default by first turning off field power and removing the Terminal Block of this module before hot-removing Module.

- Resetting Module using SVC_REQ 24 causes all channels to Hold Last State even if Default Value is configured. The application program must handle output defaulting before execution of the Service Request.
- Default Ramp Rate configuration is ignored if backplane power from the power supply is lost. Channels configured for Default Value go to the default value immediately.
- The first time a configuration is stored following a return of backplane power, the Default Ramp rate is not used. Any channel configured for Default Value goes to its default value immediately. If analog power was not lost and the same configuration is restored on the next power-up, the channel state is unchanged from the time the power was lost. The Default Ramp Rate is used for any subsequent reconfiguration.

Output Default Conditions and Actions

Condition	Hold Last State or Default Value	Default Ramp Rate Enabled	Outputs Enabled and Ramp Rate Enabled	Channel Output Setting (Except where indicated, field power is assumed to be present).
Outputs Enabled and No Faults	N/A	N/A	No	Output goes to its commanded value from reference memory; defaults don't apply.
	N/A	N/A	Yes	Output is ramped to the commanded output from reference memory at the Outputs Enabled ramp rate. Defaults don't apply.
Outputs Disabled, Fault Mode, or Reconfiguration	Default Value	No	N/A	Output is set to the Default Value
	Default Value	Yes	N/A	Output is ramped to the Default Value at the Default ramp rate, starting at the last commanded value before entering mode.
	Hold Last State	N/A	N/A	Output is held at the last commanded value
Loss of Backplane Power or First	Default Value	N/A	N/A	Output is set to the Default Value.

Configuration Store after Power-up	Hold Last State	N/A	N/A	Output is held at last commanded value.
Hot Removal, Reset with SVCREQ 24 or Cleared Configuration	N/A	N/A	N/A	Output is held at last commanded value.
Loss of Field Power	N/A	N/A	N/A	All outputs go to 0V and 0mA.

Channel Parameters

Parameter	Default	Description
High Scale Value (Eng Units)	The defaults for the four Scaling parameters depend on the configured Range Type and Range. Each Range and Range Type have a different set of defaults.	Note: Scaling is disabled if both High Scale Eng. Units equals High Scale A/D Units and Low Scale Eng. Units equals Low Scale A/D Units. Default = High A/D Limit of selected range type.
Low Scale Value (Eng Units)		Default is Low A/D Limit of selected range type. Must be lower than the high scaling value.
High Scale Value (A/D Units)		Default is High A/D Limit of selected range type. Must be greater than the low scaling value.
Low Scale Value (A/D Units)		Default is Low A/D Limit of selected range type.

Output Scaling: ALG704 and ALG708

By default, Module converts a floating-point value from the CPU into a voltage or current output over the entire span of its configured Range. For example, if the Range of a channel is 4 to 20 mA, Module accepts channel output values from 4.000 to 20.000. By modifying one or more of the four channel scaling parameters (Low/High Scale Value parameters) from their defaults, the scaled Engineering Unit range can be changed for a specific application. Scaling is always linear and inverse scaling is possible. All alarm values apply to the scaled Engineering Units value, not to the A/D units value.

The scaling parameters only set up the linear relationship between two sets of corresponding values. They do not have to be the limits of the output.

Example

In this example, the application should interpret 32000 counts as +10 Vdc and –32000 counts as -10 Vdc. The following channel configuration will scale a ±10 Vdc output channel to ±32000 counts.

Channel Value Format = 16-bit Integer

High Scale Value (Eng Units) = 32000.0

Low Scale Value (Eng Units) = -32000.0

High Scale Value (A/D Units) = 10.000

Low Scale Value (A/D Units) = -10.000

Figure 320: Channel Scaling Example

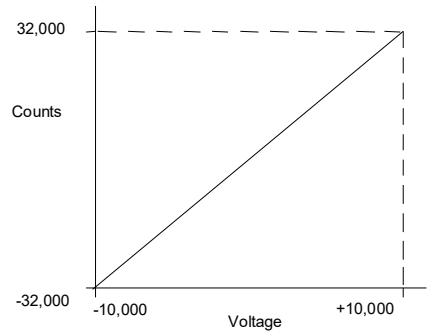

Channel Parameters (Continued)

Parameter	Default	Description
High Alarm (Eng Units)	The defaults depend on the configured Range.	All of the alarm parameters are specified in Engineering Units. When the configured value is reached or below (above), a Low (High) Alarm is triggered.
Low Alarm (Eng Units)		
Outputs Enabled Ramp Rate (Eng Units)	0.0	The rate in Engineering Units at which the output will change during normal operation.
Default Ramp Rate (Eng Units)	0.0	The rate in Engineering Units at which the output will change if a fault condition occurs or if outputs are not enabled.
Output Clamping Enabled	Disabled	Enabled / Disabled. Refer to description below.
Upper Clamp Limit (Eng Units)	The defaults depend on the configured Range.	The Upper Clamp Limit must be greater than the Lower Clamp Limit. This parameter can be used to restrict the output to a range that is narrower than its configured Range Type. For example, a channel configured for –10 Vdc to +10 Vdc could be restricted to -8V to +7.5V.
Lower Clamp Limit (Eng Units)		
Default Value (Eng Units)	0.0	If Hold Last State is disabled, the output is commanded to go to the Default Vale when the CPU is not in Outputs Enabled mode or under certain fault conditions.

User Offset (Eng Units)	0.0	A configurable value that can be used to change the base of the channel. This value is added to the scaled value of the channel before alarm-checking.

Lower, Upper Clamp and Alarms: ALG704 and ALG708

Alarms can be used to indicate when Module has been commanded to meet or exceed the configured high or low limits for each channel. These are set at six configurable alarm trigger points:

- High Alarm and Low Alarm
- Upper Clamp and Lower Clamp
- Over-range and Under-range Alarm

Each alarm is individually configurable per channel to generate diagnostics bit status, fault alarms, or interrupt alarms.

If a channel is commanded higher than the Upper Clamp value, the output is set to the Upper Clamp value and an Upper Clamp condition is indicated. If a channel is commanded lower than the Lower Clamp value, the output is set to the Lower Clamp value and a Lower Clamp condition is indicated.

The High and Low Alarm checks are performed on the engineering units output value after possibly being adjusted by ramping, clamping, and fault conditions.

Channel Parameters (Continued)

<table>
<tr><th>Parameter</th><th>Default</th><th>Description</th></tr>
<tr><td>Diagnostic Reporting Enable
If Diagnostic Reporting is enabled, the additional parameters listed below can be used to enable specific types of alarms.</td><td>Disabled</td><td rowspan="8">Diagnostic Reporting Enable options are used to enable reference memory reporting of alarms into the Diagnostic Reference area.
Fault Reporting Enable options enable fault logging of alarms into the I/O Fault Table.
These parameters enable or disable the individual diagnostics features of a channel. When any of these parameters is enabled, Module uses associated parameters to perform the enabled feature.

For example, if Over Range is enabled in the Diagnostic Reporting Enable menu, Module will set the Over Range bit in the Diagnostic Reference for the channel.</td></tr>
<tr><td>Fault Reporting Enable
If Fault Reporting is enabled, the additional parameters listed below can be used to enable specific types of Faults.</td><td>Disabled</td></tr>
<tr><td>Interrupts Enable</td><td>Disabled</td></tr>
<tr><td>Low Alarm Enable</td><td>Disabled</td></tr>
<tr><td>High Alarm Enable</td><td>Disabled</td></tr>
<tr><td>Under Range Enable</td><td>Disabled</td></tr>
<tr><td>Over Range Enable</td><td>Disabled</td></tr>
<tr><td>Lower Clamp Alarm Enable</td><td>Disabled</td></tr>
</table>

Parameter	Default	Description
Upper Clamp Alarm Enable	Disabled	If any of these parameters is disabled, Module does not react to the associated alarm conditions. For example, if Low Alarm Enable is set to Disabled in the Fault Reporting Enable menu, the Low Alarm fault is not logged in the I/O Fault Table when Low Alarm is detected on the channel.

Alarming and Fault Reporting

The Diagnostic Reporting Enable, Fault Reporting Enable, and Interrupt Enable configuration parameters can be used to enable different types of responses for individual channel alarms. By default, all responses are disabled on every channel. Any combination of alarm enables can be configured for each channel.

- If Diagnostic Reporting is enabled, Module reports channel alarms in reference memory at the Diagnostic Reference address configured for that channel.
- If Fault Reporting is enabled, Module logs a fault log in the I/O Fault table for each occurrence of a channel alarm.
- If Interrupts are enabled, an alarm can trigger execution of an Interrupt Block in the application program, as explained below.

Using Interrupts

To properly configure an I/O Interrupt, the Interrupt enable bit or bits must be set in the configuration profile of this module. In addition, the program block that should be executed in response to the channel interrupt must be mapped to the reference address corresponding to that channel.

Example:

In this example, the Output Reference Address block is mapped to %AQ0001-%AQ0008. An I/O Interrupt block should be triggered if a High Alarm condition occurs on channel 2.

- Configure the High-Alarm condition.
- Set the High-Alarm Interrupt Enable flag for Channel 2 in Module configuration.

The reference address of Channel 2 corresponds to %AQ00003 (2 Words per channel), so the interrupt program block Scheduling properties should be set for the "I/O Interrupt" Type and "%AQ0003" as the Trigger.

Fault Reporting and Interrupts

These modules have separate enable/disable options for Diagnostic Reporting and Interrupts. Normally, disabling a diagnostic (such as Low/High Alarm or Over/Under range) in the configuration means that its diagnostic bit is never set. However, if interrupts are enabled for a condition and that interrupt occurs, the diagnostic bit for that condition

is also set during the I/O Interrupt block logic execution. The next PLC input scan always clears this interrupt status bit back to 0, because Diagnostic Reporting has it disabled.

10.4.8 Module Data: ALG704 and ALG708

Module receives its channel data from its configured output words, beginning at its assigned Channel Value Reference Address. Each channel occupies two words (whether the channel is used or not):

Channel Value Reference Address	Contains this Input
+0, 1	Channel 1
+2, 3	Channel 2
+4, 5	Channel 3
+6, 7	Channel 4
For Module IC695ALG708 Only:	
+8, 9	Channel 5
+10, 11	Channel 6
+12, 13	Channel 7
+14, 15	Channel 8

Depending on its configured Channel Value Format, each enabled channel output reference location is read as a 32-bit floating-point or 16-bit integer value.

In the 16-bit integer mode, low word of the 32-bit channel data area contains the 16-bit integer channel value. The high word (upper 16-bits) of the 32-bits is ignored. The full range of the 16-bit integer is a signed decimal value from +32767 to –32768.

Because the channel reference location is 32 bits, it is possible for the application program to write 32-bit signed decimal values to the output reference. However, the program logic must restrict the magnitude of the value to the range +32767 to –32768. Exceeding this range will result in misinterpretation of the sign bit, and incorrect output channel operation.

Channel Diagnostic Data: ALG704 and ALG708

In addition to the input data from field devices, Module can be configured to report channel diagnostics status data to the CPU. The CPU stores this data at the *Diagnostic Reference Address* configured for this module. Use of this feature is optional.

The diagnostics data each channel occupies 2 words (whether the channel is used or not):

Diagnostic Reference Address	Contains Diagnostics Data for:
+0, 1	Channel 1
+2, 3	Channel 2
+4, 5	Channel 3
+6, 7	Channel 4

For Module IC695ALG708 Only:

+8, 9	Channel 5
+10, 11	Channel 6
+12, 13	Channel 7
+14, 15	Channel 8

When a diagnostic bit equals 1, the alarm or fault condition is present on the channel. When a bit equals 0 the alarm or fault condition is either not present or detection is not enabled in the configuration for that channel.

For each channel, the format of this data is:

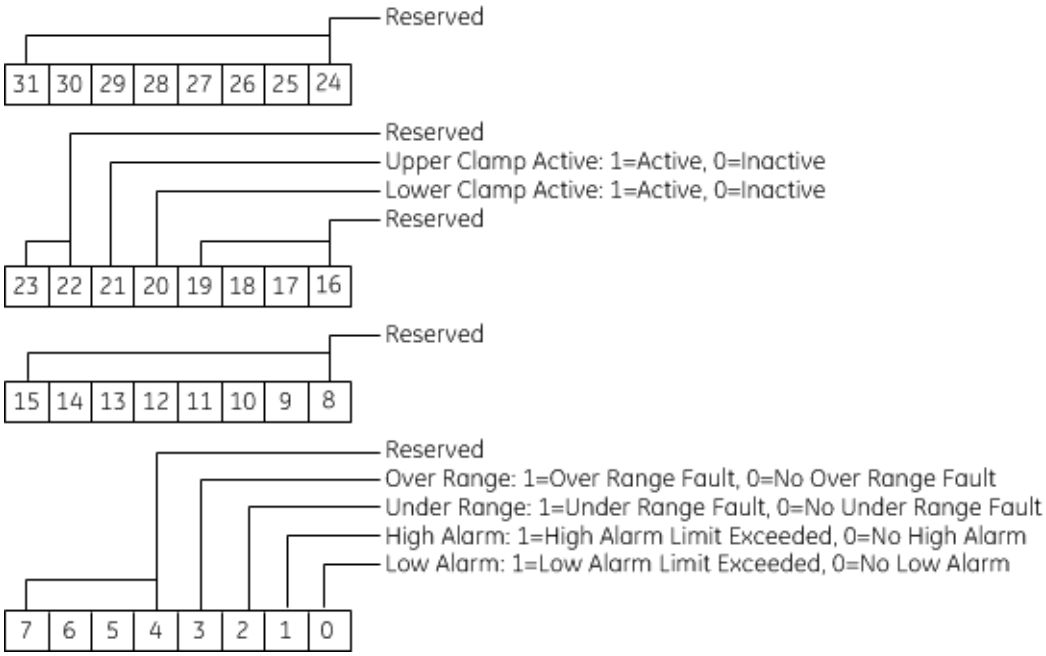

Module Status Data: ALG704 and ALG708

Module can also optionally be configured to return 4 bits of module status data to the CPU. The CPU stores this data in the 32-bit Module Status Data reference area configured for this module.

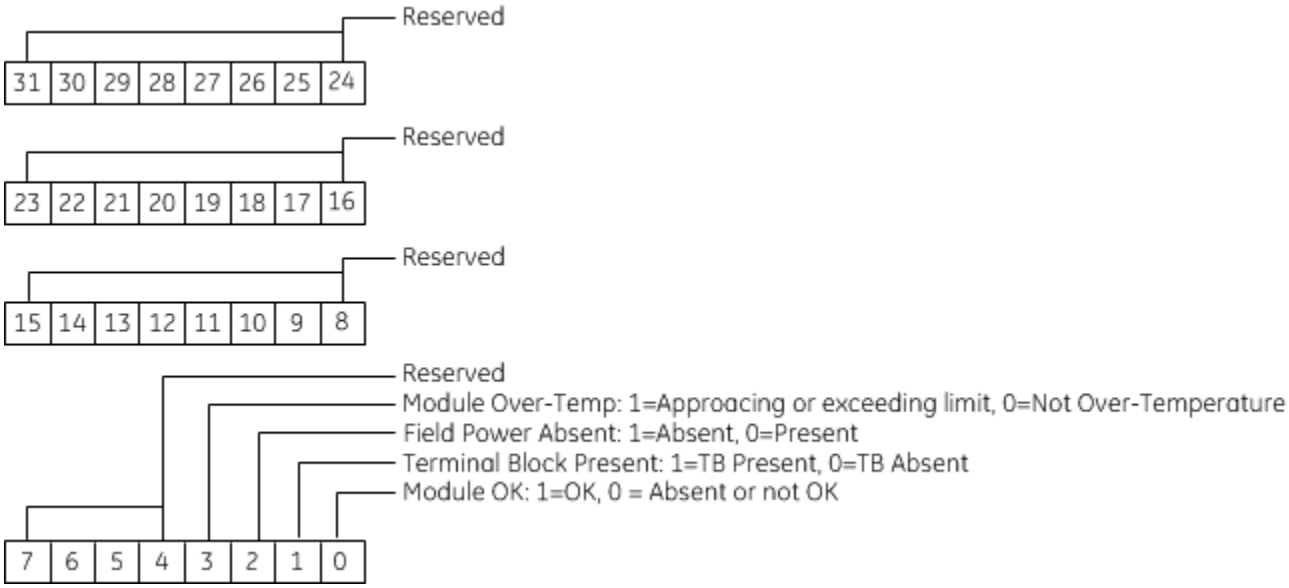

Terminal Block Detection

Module automatically checks for the presence of a Terminal Block.

The TB LED indicates the state of the terminal block of this module. It is green when the Terminal Block is present or red if it is not.

Faults are automatically logged in the CPU I/O Fault table when the terminal block is inserted or removed from a configured module in the system. The fault type is Field Fault, and the fault description indicates whether the fault is a "Loss of terminal block" or an "Addition of terminal block". If a Terminal Block is not present while a configuration is being stored, a "Loss of terminal block" fault is logged.

Bit 2 of Module Status Reference indicates the status of the terminal block. To enable Module Status reporting, Module Status Reference must be configured. During operation, the PLC must be in an I/O Enabled mode for the current Module Status to be scanned and updated in reference memory.

10.4.10 Field Wiring: ALG704 and ALG708

The following table lists wiring connections for the Non-Isolated Analog Output Modules. There are no shield terminals. For shielding, tie cable shields to the ground bar along the bottom of the backplane. M3 tapped holes are provide in the ground bar for this purpose.

Terminal	IC695ALG704	IC695ALG708	IC695ALG704	IC695ALG708	Terminal
1	Channel 2 Voltage Out		Channel 1 Voltage Out		19
2	Channel 2 Current Out		Channel 1 Current Out		20
3	Common (COM)		Common (COM)		21
4	Channel 4 Voltage Out		Channel 3 Voltage Out		22
5	Channel 4 Current Out		Channel 3 Current Out		23
6	Common (COM)		Common (COM)		24
7	No Connection	Channel 6 Voltage Out	No Connection	Channel 5 Voltage Out	25
8	No Connection	Channel 6 Current Out	No Connection	Channel 5 Current Out	26
9	Common (COM)		Common (COM)		27
10	No Connection	Channel 8 Voltage Out	No Connection	Channel 7 Voltage Out	28
11	No Connection	Channel 8 Current Out	No Connection	Channel 7 Current Out	29
12	Common (COM)		Common (COM)		30
13	Common (COM)		Common (COM)		31
14	Common (COM)		Common (COM)		32
15	Common (COM)		Common (COM)		33
16	Common (COM)		Common (COM)		34
17	Common (COM)		Common (COM)		35
18	Common (COM)		External + Power Supply (+24V In)		36

Each channel can be individually configured to operate as a voltage output or a current output, not both simultaneously. All the common terminals are connected together internally, so any common terminal can be used for the negative lead of the external power supply.

Figure 321: Field Wiring ALG704 & ALG708

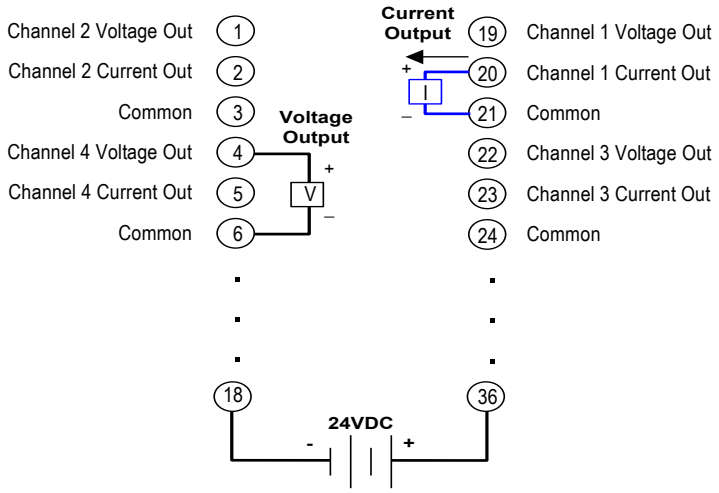
Channel 2 Voltage Out
1
Channel 2 Current Out
2
Common
3
Channel 4 Voltage Out
4
Channel 4 Current Out
5
Common
6
Voltage Output
V
+
–
Current Output
I
+
–
19
Channel 1 Voltage Out
20
Channel 1 Current Out
21
Common
22
Channel 3 Voltage Out
23
Channel 3 Current Out
24
Common
18
36
24VDC
-
+

10.6 Analog Current/Voltage Output Isolated Module 8-Channel, IC695ALG808

Figure 322: IC695ALG808

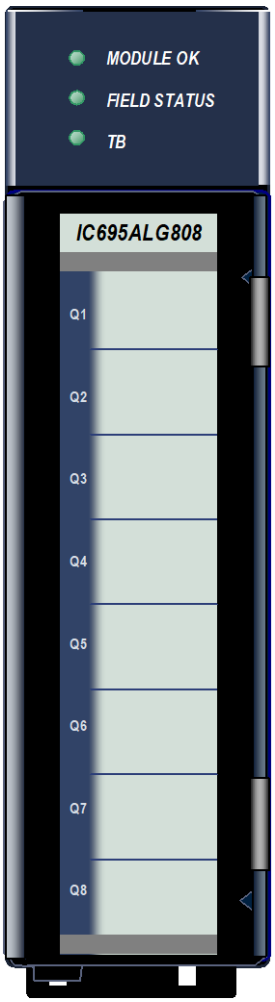

The ***Analog Current/Voltage Output Isolated*** module, IC695ALG808, provides eight configurable voltage or current output channels. Analog channels can be configured for the following output ranges:

- Current: 0 to 20 mA, 4 to 20 mA
- Voltage: ±10 Vdc, 0 to 10 Vdc

Module must be located in an RX3i Universal Backplane. These modules can be used with a Box-style (IC694TBB032), Extended Box-style (IC694TBB132), Spring-style (IC694TBS032), or Extended Spring-style (IC694TBS132) Terminal Block. Extended terminal blocks provide the extra shroud depth needed for shielded wiring. Terminal Blocks are ordered separately.

10.6.1 Isolated +24 Vdc Power

Module must receive 24 Vdc field power from an external source. The external source must be connected directly to the terminal block of this module. It cannot be connected via the TB1 connector on the RX3i Universal Backplane.

10.6.2 Features

- Completely software-configurable, no module jumpers to set
- Individually enable or disable channels
- Clamping and Alarm Limits
- Latching of Alarms
- Configurable output bias
- Rapid channel acquisition times based on filter frequency
- On-board error-checking
- Open-circuit detection for current outputs
- Short-circuit detection for voltage outputs
- Configurable scaling and offsets per channel
- High alarm, low alarm, high-high alarm, low-low alarm detection and reporting selectable per channel
- Module fault reporting
- Configurable Hold Last State or Output Defaults

Module supports insertion into and removal from an RX3i Universal Backplane which is under power. Refer to Section 2.6.4, *Hot Insertion and Removal*stat.

10.6.3 LEDs: IC695ALG808

Module **OK** LED indicates module status. The **Field Status** LED indicates whether the external +24 Vdc power supply is present and is above the minimum level and whether or not faults are present. All LEDs are powered from the backplane power bus.

LED	Indicates
Module OK	ON Green: Module OK and configured. Quick Flashing Green: Module performing power-up sequence. Slow Flashing Green or Amber: Module OK but not configured. OFF: Module is defective or no backplane power present
Field Status	ON Green No faults on any enabled channel, Terminal Block is present, and field power is present. ON Amber and TB Green: Terminal Block is installed, fault on at least one channel, or field power is not present. ON Amber and TB Red: Terminal Block not fully removed, field power detected. OFF and TB Red: Terminal block not present and no field power is detected.

TB	ON Red: Terminal block not present or not fully seated. Refer to above. ON Green: Terminal block is present. Refer to above. OFF: No backplane power to module.

10.6.5 Specifications: IC695ALG808

IC695ALG808	Specifications
Output Ranges	Current: 0 to 20 mA, 4 to 20 mA Voltage: ±10 Vdc, 0 to 10 Vdc
Backplane Power Requirements	For ALG808-FA and earlier: 450 mA maximum at 3.3 V; 25 mA maximum at 5.0 V
	For ALG808-GB and later: 250 mA maximum at 3.3 V; 17 mA maximum at 5.0 V
Power Dissipation within Module	7.25 W maximum (Vuser=24 V)
Thermal De-rating	None required
External +Power Supply	Voltage Range: 19.2 to 30 V (24 V nominal) Current: 660 mA maximum
Resolution	±10 Vdc: 15 bits, 0 to 10 Vdc: 14 bits, 0 to 20 mA: 15 bits, 4 to 20 mA: 15 bits
Output Data Format	Configurable as floating-point IEEE 32-bit or 16-bit integer in a 32-bit field
Analog Update Rate (Determined by I/O scan time, application dependent)	8 ms (approximate, all eight channels)
Output Overvoltage Protection	Current outputs only: -30 V for 60 seconds, +30 V for one hour
Calibrated Accuracy[66]	Accurate to within 0.10% of full scale at 25°C (From 0 to 0.05 mA, accuracy is ±35 µA) Accurate to within 0.25% of full scale at 0-60°C (From 0 to 0.05 mA, accuracy is ±70 µA)
Output Load Reactance	Current: 10 µH maximum, Voltage: 1 µF maximum
Maximum Output Load	Current: 1350 Ω maximum Voltage: 2 kΩ minimum
Output Gain Drift	Voltage output: 20 ppm per degree C typical Current output: 35 ppm per degree C typical
Output Settling Time	Voltage or current output: 2 ms, 0 to 95%
Isolation, Field to Backplane	2550 Vdc for one second
Isolation, Channel to Channel	250 Vac continuous 1500 Vac for one minute per channel

10.6.6 Configuration: IC695ALG808

Module Parameters

Parameter	Default	Description
Outputs Reference Address	%AQxxxxx	Starting address for the output data of this module. This defaults to the next available %AQ block.
Outputs Reference Length	16	The number of words used for the output data of this module. This parameter cannot be changed.
Output Command Feedback Reference Address	%AIxxxxx	Stating address for the command feedback data of this module. This defaults to the next available %AI address after a non-zero length is configured.
Output Command Feedback Length	0	The number of words used for the command feedback data of this module. Length defaults to 0. It can be set to 16.
Diagnostic Reference Address	%Ixxxxx	Starting address for the channel diagnostics status data. This defaults to the next available %I block.
Diagnostic Reference Length	0	Read Only. The number of bit reference bits required for the Channel Diagnostics data. Default is 0, which means mapping of Channel Diagnostics is disabled. Change this to a non-zero value to enable Channel Diagnostics mapping. Maximum length is 256 bits for module IC695ALG808.
Module Status Reference Address	%Ixxxxx	Starting address for the status data of this module. This defaults to the next available %I block.
Module Status Reference Length	0	Read Only. The number of bits (0 or 32) required for Module Status data. Default is 0, which means mapping of Module Status data is disabled. Change this to a non-zero value to enable Module Status data mapping.

Analog Output Commanded Feedback

Module returns a copy of the analog output data received from the CPU in its corresponding channel analog input shared memory. Output Feedback can be monitored to check the values being sent to the channels. The data is in the same scaled format as the output data for each channel. During normal operation, this feedback data should match the actual output data after one or more PLC scans of module inputs. During faults, ramping, over-range, and clamping conditions, the analog output data may differ from the commanded output.

Over-Temperature

If Over-Temperature is enabled, Module generates an Over-Temperature alarm if the internal temperature of this module is too great for the number of outputs that are on at the same time. In addition to the configurable options for Over-Temperature fault reporting and interrupts, an over temperature condition is also indicated by the Over-Temperature bit in the Status Reference data of this module. Detection of the Over-Temperature status bit is always enabled.

Module Parameters (Continued)

Parameter	Default	Description
I/O Scan Set	1	Assigns Module I/O status data to a scan set defined in the CPU configuration. Determines how often the RX3i polls the data
Channel Faults w/o Terminal Block	Disabled	Enabled / Disabled: Controls whether channel faults and configured alarm responses will be generated after a Terminal Block removal. The default setting of Disabled means channel faults and alarms are suppressed when the Terminal Block is removed. This parameter does not affect module faults including the Terminal Block loss/add fault generation.
Module Fault Reporting Enabled	Enabled	Enabled / Disabled. Controls whether Module will report faults resulting from either loss of field power or over-temperature conditions.
Field Power Removed Enabled	Enabled	Enabled / Disabled. With Module Fault Reporting enabled, this parameter controls reporting of Field Power Removed module faults.
Over Temp Enabled	Enabled	Enabled / Disabled. With Module Fault Reporting enabled, this parameter controls reporting of Over-temperature module faults.
Module Interrupt Reporting Enabled	Disabled	Enabled / Disabled.
Field Power Removed Enabled	Disabled	Enabled / Disabled. With Module Interrupt Reporting enabled, this parameter controls interrupts for Field Power Removed module faults.
Over Temp Enabled	Disabled	Enabled / Disabled. With Module Interrupt Reporting enabled, this parameter controls interrupts for Over-temperature module faults.
Range Type	Disabled Current	Sets up the type of output to be used for each channel. Choices are: Disabled Voltage, Disabled Current, Current/Voltage.
Range (Only for Range Type Current/Voltage)	-10 Vdc to +10 Vdc	For Current/Voltage: -10 to +10 Vdc, 0 to +10 Vdc, 4 to 20 mA, 0 to 20 mA.
Channel Value Format	32-bit Floating-point	16-bit integer or 32-bit floating-point
Outputs Default	Force to Default Value	Controls the state the output will be set to in Outputs Disabled mode (stop), if a fault occurs, if power is lost, or if the configuration is cleared. Choices are Hold Last State, or default to a specific configured default value.

Range Type

Each channel on Module that will be used should be configured for Current/Voltage. Its voltage or current range and other parameters can then be configured as needed. If the channel output will not be used and is not wired, select either “Disabled” option. If a channel is disabled, it is not necessary to configure any of its other parameters.

If the channel is wired to a current output, but is not being used, select "Disabled Current". This will set the output current of that channel to 0mA (the output voltage of that channel will be non-zero).

If the channel is wired to a voltage output, but is not being used, select "Disabled Voltage". This will set the output voltage of that channel to 0V (the output current of that channel will be non-zero).

Output Defaults

If Hold Last State is enabled, an output will hold its last commanded value when the CPU indicates Outputs Not Enabled, or if one of the fault conditions listed below occurs. If Hold Last State is disabled, the output is commanded to go to the Default Value. The Default Value must be set within the selected output range. If both Default Value and Ramp Rate are enabled, the channel will ramp to the default value. Fault conditions are:

- CPU outputs are not enabled.
- Backplane power is not ok. In that case, there is no ramping, even if ramping has been enabled.
- Loss of communications from CPU.
- Loss of I/O communications.
- Loss of field power.

Outputs Default Notes

- Hot Removal of Module in an I/O Enabled mode will cause all outputs to Hold Last State (even channels configured for Force to Default Value). If that operation is not desirable, the outputs can be forced to default by first turning off field power and removing the Terminal Block of this module before hot-removing Module.
- Resetting Module using SVC_REQ 24 causes all channels to Hold Last State even if Default Value is configured. The application program must handle output defaulting before execution of the Service Request.
- Default Ramp Rate configuration is ignored if backplane power from the power supply is lost. Channels configured for Default Value go to the default value immediately.

The first time a configuration is stored following a return of backplane power, the Default Ramp rate is not used. Any channel configured for Default Value goes to its default value immediately. If analog power was not lost and the same configuration is restored on the next power-up, the channel state is unchanged from the time the power was lost. The Default Ramp Rate is used for any subsequent reconfiguration.

Output Default Conditions and Actions

Condition	Hold Last State or Default Value	Default Ramp Rate Enabled	Outputs Enabled and Ramp Rate Enabled	Channel Output Setting (Except where indicated, field power is assumed to be present).
Outputs Enabled and No Faults	N/A	N/A	No	Output goes to its commanded value from reference memory; defaults don't apply.
	N/A	N/A	Yes	Output is ramped to the commanded output from reference memory at the Outputs Enabled ramp rate. Defaults don't apply.
Outputs Disabled, Fault Mode, or Reconfiguration	Default Value	No	N/A	Output is set to the Default Value
	Default Value	Yes	N/A	Output is ramped to the Default Value at the Default ramp rate, starting at the last commanded value before entering mode.
	Hold Last State	N/A	N/A	Output is held at the last commanded value
Loss of Backplane Power or First Configuration Store after Power-up	Default Value	N/A	N/A	Output is set to the Default Value.
	Hold Last State	N/A	N/A	Output is held at last commanded value.
Hot Removal, Reset with SVCREQ 24 or Cleared Configuration	N/A	N/A	N/A	Output is held at last commanded value.
Loss of Field Power	N/A	N/A	N/A	All outputs go to 0 V and 0 mA.

Channel Parameters

Parameter	Default	Description
High Scale Value (Eng Units)	The defaults for the four Scaling parameters depend on the configured Range Type and Range. Each Range and Range Type have a different set of defaults.	Note: Scaling is disabled if both High Scale Eng. Units equals High Scale A/D Units and Low Scale Eng. Units equals Low Scale A/D Units. Default = High A/D Limit of selected range type.
Low Scale Value (Eng Units)		Default is Low A/D Limit of selected range type. Must be lower than the high scaling value.
High Scale Value (A/D Units)		Default is High A/D Limit of selected range type. Must be greater than the low scaling value.
Low Scale Value (A/D Units)		Default is Low A/D Limit of selected range type.

Output Scaling

By default, Module converts a floating-point value from the CPU into a voltage or current output over the entire span of its configured Range. For example, if the Range of a channel is 4 to 20 mA, Module accepts channel output values from 4.000 to 20.000. By modifying one or more of the four channel scaling parameters (Low/High Scale Value parameters) from their defaults, the scaled Engineering Unit range can be changed for a specific application. Scaling is always linear and inverse scaling is possible. All alarm values apply to the scaled Engineering Units value, not to the A/D Units value.

The scaling parameters only set up the linear relationship between two sets of corresponding values. They do not have to be the limits of the output.

Example

In this example, the application should interpret 32000 counts as +10 Vdc and –32000 counts as -10 Vdc. The following channel configuration will scale a ±10 Vdc output channel to ±32000 counts.

Channel Value Format = 16-bit Integer

High Scale Value (Eng Units) = 32000.0

Low Scale Value (Eng Units) = -32000.0

High Scale Value (A/D Units) = 10.000

Low Scale Value (A/D Units) = -10.000

Figure 323: Channel Scaling Example

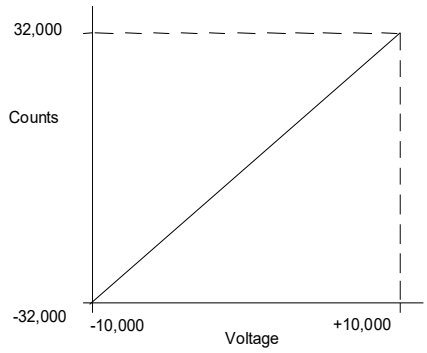

Channel Parameters (Continued)

Parameter	Default	Description
High Alarm (Eng Units)	The defaults depend on the configured Range.	All of the alarm parameters are specified in Engineering Units. When the configured value is reached or below (above), a Low (High) Alarm is triggered.
Low Alarm (Eng Units)		
Outputs Enabled Ramp Rate (Eng Units)	0.0	The rate in Engineering Units at which the output will change during normal operation.
Default Ramp Rate (Eng Units)	0.0	The rate in Engineering Units at which the output will change if a fault condition occurs or if outputs are not enabled.
Output Clamping Enabled	Disabled	Enabled / Disabled. Refer to description below.
Upper Clamp Limit (Eng Units)	The defaults depend on the configured Range.	The Upper Clamp Limit must be greater than the Lower Clamp Limit. This parameter can be used to restrict the output to a range that is narrower than its configured Range Type. For example, a channel configured for –10 Vdc to +10 Vdc could be restricted to -8V to +7.5V.
Lower Clamp Limit (Eng Units)		
Default Value (Eng Units)	0.0	If Hold Last State is disabled, the output is commanded to go to the Default Vale when the CPU is not in Outputs Enabled mode or under certain fault conditions.

User Offset (Eng Units)	0.0	A configurable value that can be used to change the base of the channel. This value is added to the scaled value of the channel before alarm-checking.

Lower, Upper Clamp and Alarms

Alarms can be used to indicate when Module has been commanded to meet or exceed the configured high or low limits for each channel. These are set at six configurable alarm trigger points:

- High Alarm and Low Alarm
- Upper Clamp and Lower Clamp
- Over-range and Under-range Alarm

Each alarm is individually configurable per channel to generate diagnostics bit status, fault alarms, or interrupt alarms.

If a channel is commanded higher than the Upper Clamp value, the output is set to the Upper Clamp value and an Upper Clamp condition is indicated. If a channel is commanded lower than the Lower Clamp value, the output is set to the Lower Clamp value and a Lower Clamp condition is indicated.

The High and Low Alarm checks are performed on the engineering units output value after possibly being adjusted by ramping, clamping, and fault conditions.

Channel Parameters (Continued)

Parameter	Default	Description
Diagnostic Reporting Enable If Diagnostic Reporting is enabled, the additional parameters listed below can be used to enable specific types of alarms.	Disabled	Diagnostic Reporting Enable options are used to enable reference memory reporting of alarms into the Diagnostic Reference area. Fault Reporting Enable options enable fault logging of alarms into the I/O Fault Table. These parameters enable or disable the individual diagnostics features of a channel. When any of these parameters is enabled, Module uses associated parameters to perform the enabled feature. For example, if Over Range is enabled in the *Diagnostic Reporting Enable* menu, Module will set the Over Range bit in the Diagnostic Reference for the channel. If any of these parameters is disabled, Module does not react to the associated alarm conditions. For example, if Low Alarm Enable is set to Disabled in the *Fault Reporting Enable* menu, the Low Alarm fault is not logged in the I/O Fault Table when Low Alarm is detected on the channel.
Fault Reporting Enable If Fault Reporting is enabled, the additional parameters listed below can be used to enable specific types of Faults.	Disabled	
Interrupts Enable	Disabled	
Low Alarm Enable	Disabled	
High Alarm Enable	Disabled	
Under Range Enable	Disabled	
Over Range Enable	Disabled	
Open Wire Enable (current mode only)	Disabled	
Lower Clamp Alarm Enable	Disabled	
Upper Clamp Alarm Enable	Disabled	
Short Circuit Enable (voltage mode only)	Disabled	

Alarming and Fault Reporting

The Diagnostic Reporting Enable, Fault Reporting Enable, and Interrupt Enable configuration parameters can be used to enable different types of responses for individual channel alarms. By default, all responses are disabled on every channel. Any combination of alarm enables can be configured for each channel.

- If Diagnostic Reporting is enabled, Module reports channel alarms in reference memory at the Diagnostic Reference address configured for that channel.
- If Fault Reporting is enabled, Module logs a fault log in the I/O Fault table for each occurrence of a channel alarm.
- If Interrupts are enabled, an alarm can trigger execution of an Interrupt Block in the application program, as explained below.

Using Interrupts

To properly configure an I/O Interrupt, the Interrupt enable bit or bits must be set in the configuration profile of this module. In addition, the program block that should be executed in response to the channel interrupt must be mapped to the reference address corresponding to that channel.

Example:

In this example, the Output Reference Address block is mapped to %AQ0001-%AQ0008. An I/O Interrupt block should be triggered if a High Alarm condition occurs on Channel 2.

- Configure the High-Alarm condition.
- Set the High-Alarm Interrupt Enable flag for Channel 2 in Module configuration.

The reference address of Channel 2 corresponds to %AQ00003 (2 Words per channel), so the interrupt program block Scheduling properties should be set for the "I/O Interrupt" Type and "%AQ0003" as the Trigger.

Fault Reporting and Interrupts

These modules have separate enable/disable options for Diagnostic Reporting and Interrupts. Normally, disabling a diagnostic (such as Low/High Alarm or Over/Under range) in the configuration means that its diagnostic bit is never set. However, if interrupts are enabled for a condition and that interrupt occurs, the diagnostic bit for that condition is also set during the I/O Interrupt block logic execution. The next PLC input scan always clears this interrupt status bit back to 0, because Diagnostic Reporting has it disabled.

10.6.7 Module Data: IC695ALG808

Module receives its channel data from its configured output words, beginning at its assigned Channel Value Reference Address. Each channel occupies two words (whether the channel is used or not):

Channel Value Reference Address	Contains this Input
+0, 1	Channel 1
+2, 3	Channel 2
+4, 5	Channel 3
+6, 7	Channel 4
+8, 9	Channel 5
+10, 11	Channel 6
+12, 13	Channel 7
+14, 15	Channel 8

Depending on its configured Channel Value Format, each enabled channel output reference location is read as a 32-bit floating-point or 16-bit integer value.

In the 16-bit integer mode, low word of the 32-bit channel data area contains the 16-bit integer channel value. The high word (upper 16-bits) of the 32-bits is ignored. The full range of the 16-bit integer is a signed decimal value from +32767 to –32768.

Because the channel reference location is 32 bits, it is possible for the application program to write 32-bit signed decimal values to the output reference. However, the program logic must restrict the magnitude of the value to the range +32767 to –32768. Exceeding this range will result in misinterpretation of the sign bit, and incorrect output channel operation.

Channel Diagnostic Data

In addition to the input data from field devices, Module can be configured to report channel diagnostics status data to the CPU. The CPU stores this data at the *Diagnostic Reference Address* configured for this module. Use of this feature is optional.

The diagnostics data for each channel occupies 2 words (whether the channel is used or not):

Diagnostic Reference Address	Contains Diagnostics Data for:
+0, 1	Channel 1
+2, 3	Channel 2
+4, 5	Channel 3
+6, 7	Channel 4
+8, 9	Channel 5
+10, 11	Channel 6
+12, 13	Channel 7
+14, 15	Channel 8

When a diagnostic bit equals 1, the alarm or fault condition is present on the channel. When a bit equals 0 the alarm or fault condition is either not present or detection is not enabled in the configuration for that channel.

For each channel, the format of this data is:

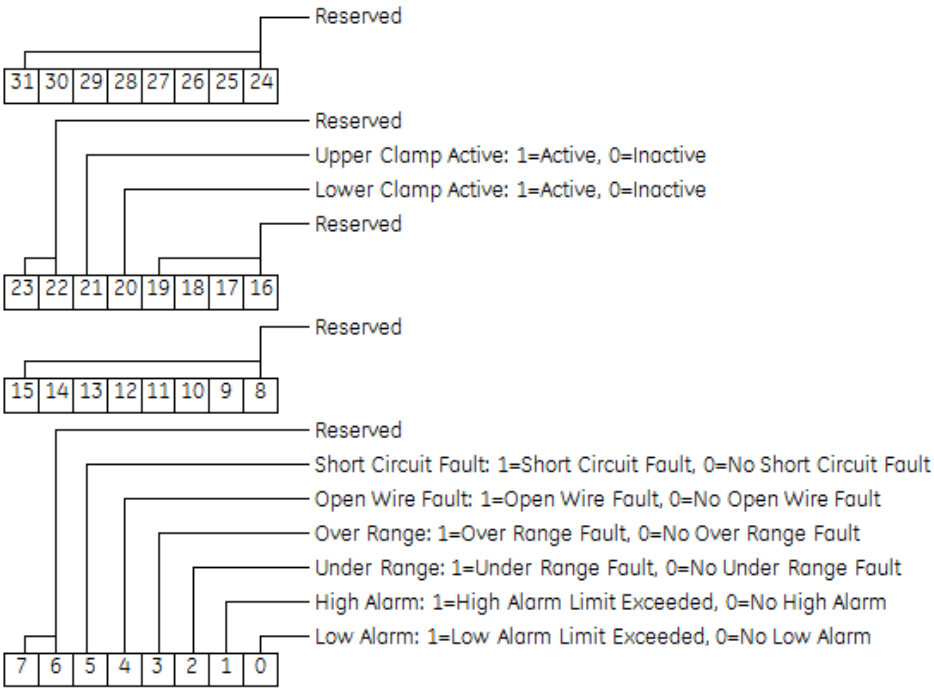

Module Status Data: ALG808

Module can also optionally be configured to return 4 bits of module status data to the CPU. The CPU stores this data in the 32-bit Module Status Data reference area configured for this module.

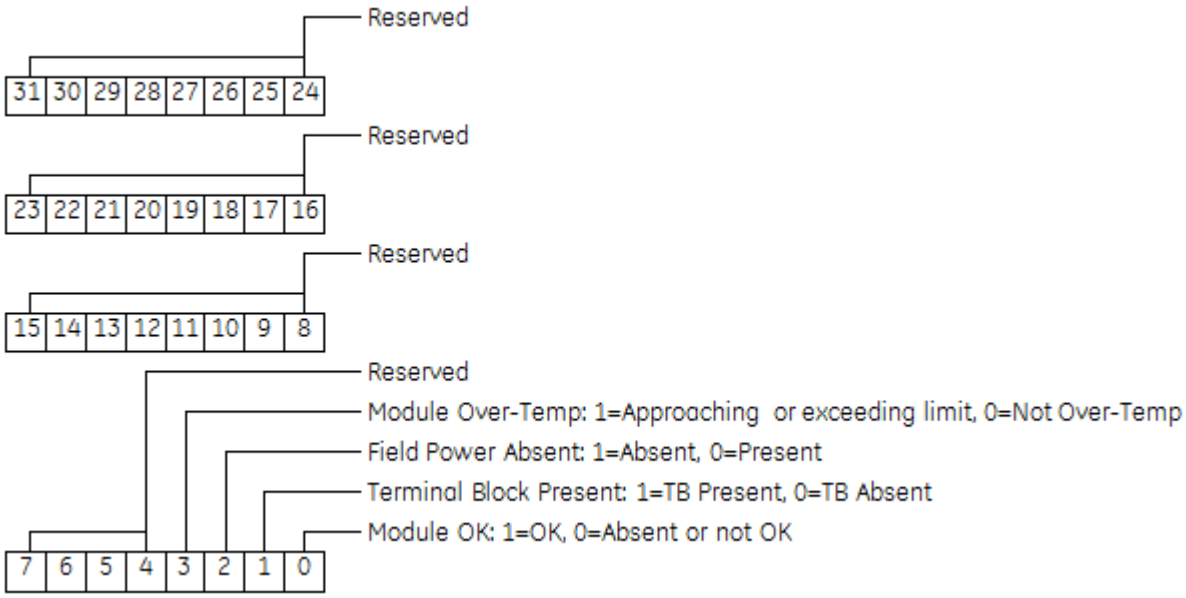

Terminal Block Detection

Module automatically checks for the presence of a Terminal Block.

The TB LED indicates the state of the terminal block of this module. It is green when the Terminal Block is present or red if it is not.

Faults are automatically logged in the CPU I/O Fault table when the terminal block is inserted or removed from a configured module in the system. The fault type is Field Fault and the fault description indicates whether the fault is a "Loss of terminal block" or an "Addition of terminal block". If a Terminal Block is not present while a configuration is being stored, a "Loss of terminal block" fault is logged.

Bit 2 of Module Status Reference indicates the status of the terminal block. To enable Module Status reporting, Module Status Reference must be configured. During operation, the PLC must be in an I/O Enabled mode for the current Module Status to be scanned and updated in reference memory.

10.6.9 Field Wiring: IC695ALG808

The following table lists wiring connections for the Isolated Analog Output Modules. There are no shield terminals.

Terminal	Assignment	Assignment	Terminal
1	No Connect	No Connect	19
2	Channel 1 Current/Voltage Output	Channel 5 Current/Voltage Output	20
3	Channel 1 Ground/Return	Channel 5 Ground/Return	21
4	No Connect	No Connect	22
5	No Connect	No Connect	23
6	Channel 2 Current/Voltage Output	Channel 6 Current/Voltage Output	24
7	Channel 2 Ground/Return	Channel 6 Ground/Return	25
8	No Connect	No Connect	26
9	No Connect	No Connect	27
10	Channel 3 Current/Voltage Output	Channel 7 Current/Voltage Output	28
11	Channel 3 Ground/Return	Channel 7 Ground/Return	29
12	No Connect	No Connect	30
13	No Connect	No Connect	31
14	Channel 4 Current/Voltage Output	Channel 8 Current/Voltage Output	32
15	Channel 4 Ground/Return	Channel 8 Ground/Return	33
16	No Connect	No Connect	34
17	External + Power Supply (+24V In)	No Connect	35
18	External - Power Supply (+24V Rtn)	No Connect	36

Each channel can be individually configured to operate as a voltage output or a current output - not both simultaneously.

Figure 324: Field Wiring: ALG808

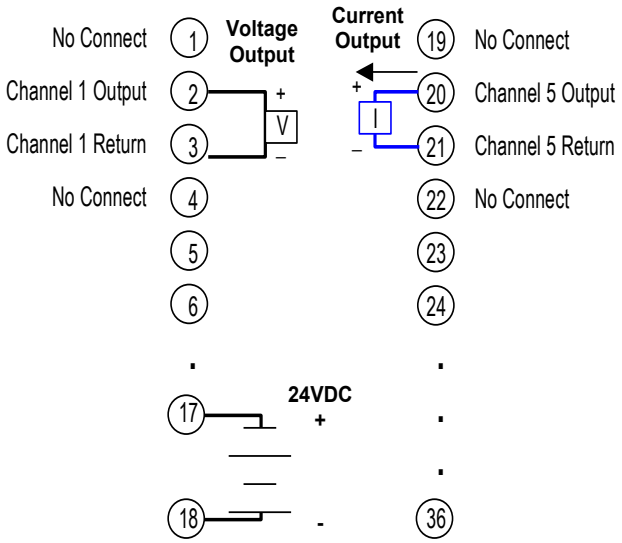
No Connect
1
Voltage Output
Current Output
19
No Connect
Channel 1 Output
2
+
V
–
+
I
–
20
Channel 5 Output
Channel 1 Return
3
21
Channel 5 Return
No Connect
4
22
No Connect
5
23
6
24
24VDC
+
17
18
-
36

Section 11: Analog Modules with HART Communications

This chapter describes Non-Isolated Analog modules that provide HART® communications and are compatible with PACSystems RX3i controllers.

- Overview of HART Communications for PACSystems RX3i (Section 11.1)
- Module Descriptions, specifications, configuration parameters, and wiring information for:
  - Analog Input Module 16-/8-Channel Current/Voltage with HART: IC695ALG626 (Section 11.1.4)
  - Analog Input Module 8-/4-Channel Current/Voltage with HART: IC695ALG628 (Section 11.1.4)
  - Analog Output Module 8-Channel Current/Voltage with HART: IC695ALG728 (Section 11.3)
- HART Reference Data (Section 11.4)
- COMMREQs for HART Modules (Section 11.5)
- HART Function Blocks for the Application Program (Section 11.6)
- Converting HART Data to / from RX3i Format (Section 11.7)

11.1 Overview of HART Communications for PACSystems RX3i

HART (Highway Addressable Remote Transducer) protocol is an open standard owned by the members of the HART Communication Foundation. HART combines simultaneous 4 to 20 mA current loop operation with digital communications using the same signal. It imposes a frequency-shifted AC signal on the normal 4 to 20mA current loop signal. Both analog and digital communications signals utilize the same

HART® is a registered trademark of the HART Communication Foundation of Austin, Texas USA. Any use of the term HART hereafter in this document, or any document referenced by this document, implies the registered trademark.

set of wires without signal disruptions. For more information about HART, refer to the HART Application Guide, published by the HART Communication Foundation (www.hartcomm.org).

For PACSystems RX3i, point-to-point HART communications are provided by the three analog modules described in this chapter. Each channel on modules IC695ALG626, ALG628, and ALG728 can utilize HART 5.0 protocol to communicate with HART field devices. The HART devices must be revision 5.0 or later; earlier HART versions use a different messaging format that is not supported by the RX3i analog HART modules.

To utilize HART communications, a channel must be configured for HART operation as described in this chapter, and for 4 to 20 mA current range. During module operation, the 4 to 20mA channel signal communicates one process variable. Additional process variables, configuration data, and device data are transferred digitally using the HART protocol. The 4 to 20 mA signal is not affected by the HART signal.

Effective with Release 8.50 of the RX3i CPU firmware, the product line also supports HART Pass Through functionality, which is described in the *PACSystems HART Pass Through User Manual*, GFK-2929.

11.1.1 RX3i HART Module Operation

HART is a master-slave communications protocol. An RX3i analog module with HART communications acts as the Primary Master for a single HART field device. It tolerates the presence of a Secondary Master, usually an optional handheld device. The RX3i Analog HART module does not support multi-drop communications (i.e., multiple field devices on a channel), nor does it support Burst Mode transmissions.

The RX3i HART module automatically issues HART commands to any HART device that is present and enabled in configuration. The response data from these commands is maintained within the internal memory of the RX3i HART module and is made available to the RX3i Controller via input scanning of HART Data, or via the Get Device Information COMMREQ (command 1).

An RX3i HART module can be configured to make HART device data available to the RX3i controller via input scanning by using the *HART Data Scan Control*. With this option, the automatic HART command response

data from each device is formatted and written to RX3i reference memory at the HART Data Reference Address. This occurs during the normal RX3i input scan. This option may be disabled.

Two modes of automatic data presentation are configurable: "*All Data*" and "*Dynamic Data*".

- *Dynamic Only* periodically executes HART command #3 and provides the resulting PV, SV, TV, and FV variables to the RX3i input reference memory. If *HART Slot Variables* are enabled, HART command #33 slot variable values are also updated automatically. *Dynamic Only* data also includes the most current Communication and Device Status.
- *All Data* option provides the same information as the Dynamic Only option, plus additional data from HART commands 0, 12, 13, 15, 16, 48, and 50.

During start-up, or after a device configuration changes (as indicated by the "configuration changed" bit on the HART device being set), the RX3i HART module executes HART commands 0, 3, 12, 13, 15, 16, 33, 48, and 50 (*All Data* mode). In addition, if HART Slot Variables are enabled (*Dynamic Data* mode), Module periodically re-issues commands #3 and #33. The repetition period at which the *Dynamic Data* commands are issued depends on the configuration for HART Pass-Through Service Options and on the number of HART devices enabled in a modem group. HART command #59 is issued each time a HART device initializes: it sets the number of preambles to 5.

In many applications, the *Dynamic Only* option should provide all of the needed HART variables. The variable data updates automatically in the input scan data of the HART module (no COMMREQ trigger is needed). If the *Dynamic Only* data is not sufficient, additional HART data may be accessed automatically using the *All Data* option. Enabling either the *Dynamic Only* or *All Data* option affects the PLC I/O sweep time because of increased input scan data from Module.

If neither scan option provides all the necessary inputs, or if additional control of HART devices is needed, COMMREQs are available that provide additional functionality or replace the automatic input scanning. Three COMMREQs are available.

- The Get Device Information COMMREQ (Command 1) returns the same data for a HART device as the *All Data* scan option; however, this COMMREQ must be reissued in logic to get updates of the variable data.
- The HART Pass-Through COMMREQ is capable of executing any HART command including manufacturer-specific commands; however, care must be used to correctly format HART command request and response

data, which must be byte-packed and “big-endian” formatted. Instructions are given in this chapter.

- The Remote Get Device Information COMMREQ returns the same data for a HART device as the *All Data* scan option; however, this COMMREQ must be reissued in logic to get updates of the variable data.

11.1.2 Using DO I/O with HART Modules

The HART modules fully support the DOIO function block provided only analog channel values and analog diagnostics are to be scanned. However, DOIO will not function under certain conditions when HART devices are enabled, and the HART Data Scan Control is set to either *All Data* or *Dynamic Only*.

Due to RX3i CPU limitations, only modules with input scan sizes of 256 bytes or less can use the DOIO function block. HART modules will function normally with DOIO except when the input scan size exceeds 256 bytes (this input size limitation may be increased or eliminated in future releases). When this input scan size is exceeded, any attempt to use DOIO for HART module inputs or outputs will fail, and the DOIO function will not pass power flow. The exact number of devices that can be enabled while DOIO continues to operate normally depends on the RX3i HART module employed.

- For ALG628 and ALG728, the number of HART devices that can be enabled with *All Data* selected is one, and the number of devices with *Dynamic Only* selected is five or fewer.
- For ALG626, the number devices enabled with *Dynamic Only* selected is three. Furthermore, DOIO will not function at all for ALG626 whenever any HART devices are enabled with *All Data* selected.

11.1.3 Using a Hand-held Calibrator with RX3i Analog HART Modules

It is often necessary to perform maintenance on field devices using a hand-held HART calibrator. The RX3i HART module behaves as a HART master and the field device is considered the slave.

When using a hand-held communicator in conjunction with the HART I/O, the calibrator is considered a secondary master.

Figure 325: Use of Hand-Held HART Calibrator

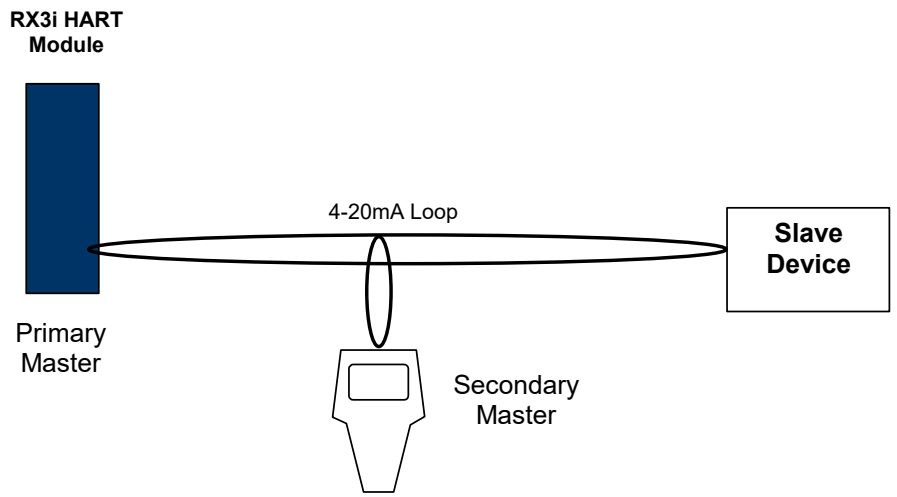

The master must initiate the communication with the field device. The device simply replies with an appropriate response.

Any given channel may have a master, a secondary master (hand-held calibrator), and a slave connected simultaneously.

11.1.4 HART Pass-Through Functionality

HART Pass Through is the term given to the bidirectional tunneling of HART commands and responses through a PLC system. The HART communications in question are between those HART devices connected to HART-capable analog I/O modules and a monitoring station. Both the I/O and the monitoring station must be connected to the same PLC. For further information, refer to the *PACSystems HART Pass Through User Manual*, GFK-2929.

Compatible PACSystems PLC CPUs support two independent and distinct HART Pass Through technologies:

- PACSystems Field Device Tool (FDT) HART Device Type Managers (DTMs) and
- the PACSystems HART Multiplexer.

Both technologies support HART devices connected to analog IO modules with HART support. The analog I/O modules may be located in one of the following:

1. an RX3i CPU rack,
2. an RX3i PROFINET Scanner rack (i.e., an I/O rack under the control of a PNS001 or PNS101 module), or
3. an RX3i PROFINET CEP remote drop, which is always controlled by a CEP001 module.

Support for the PROFINET racks requires that the supervising RX3i PROFINET IO Controller (PNC001) be located in the RX3i CPU rack. Operation with Hot Standby CPU Redundancy and PROFINET I/O is supported using a redundant IP connection.

The following RX3i analog modules support HART:

IC695ALG626

IC695ALG628[67]

IC695ALG728

[67] *If used, IC695ALG628 must be installed in the RX3i CPU Rack. At time of publication, it is not supported by PROFINET scanners IC695PNS001 or IC695CEP001. Refer to IPIs for IC695PNS001 or IC695CEP001 for future updates.*

If used for HART Pass Through, the supporting RX3i PROFINET Controller (PNC001) and PROFINET Scanner (PNS001 or CEP001) must also contain HART-compatible firmware:

IC695PNC001 Firmware Release 2.20

IC695PNS001 Firmware Release 2.30 or PNS101[68]

IC695CEP001 Firmware Release 2.30.

The primary difference between the PACSystems FDT HART DTMs and the PACSystems HART Multiplexer is that they are designed to work with different types of HART asset management applications.

- The PACSystems FDT HART DTMs are installed whenever the HART devices will be configured and monitored using an FDT Frame Application such as Device Manager Essentials or another FDT-compatible asset management application.
- The PACSystems HART Multiplexer is installed whenever the HART devices will be configured and monitored using AMS™ from Emerson Process Management™.

Both technologies require Ethernet communications between the host PC and the PLC. Note that the architecture of the PLC system is the same in either solution.

[68] *When used with HART, the PNS101 is used in place of PNS001, and would not typically be employed for Sequence of Events application.*

11.2 Analog Input Module 16-/8-Channel Current/Voltage with HART: IC695ALG626 Analog Input Module 8-/4-Channel Current/Voltage with HART: IC695ALG628

Figure 326: IC695ALG626

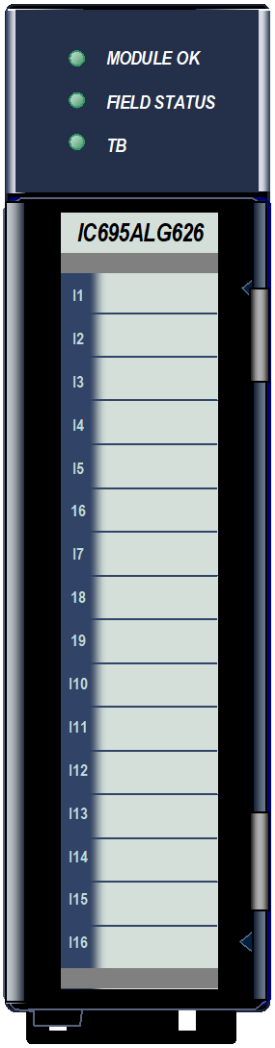

Non-Isolated Differential Analog Current/Voltage Input module, IC695ALG628, provides 8 single-ended or 4 differential input channels. Non-Isolated Differential Analog Current/Voltage Input module, IC695ALG626, provides 16 single-ended or 8 differential input channels.

Both modules feature HART version 5.0 communications capability on each channel. Module IC695ALG626 has four internal HART modems. Module IC695ALG628 has two internal HART modems. In single-ended mode, four single-ended channels are multiplexed into each HART modem. In differential mode, two differential channels are multiplexed into each HART modem.

Analog input channels can be configured for these ranges:

- Current: 0 to 20 mA, 4 to 20 mA, ±20 mA
- Voltage: ±10 Vdc, 0 to 10 Vdc, ±5 Vdc, 0 to 5 Vdc, 1 to 5 Vdc.

Channels that will use HART communications must be configured for the 4 to 20 mA range.

11.2.1 Features

- Completely software-configurable, no module jumpers to set
- Full auto-calibration
- On-board error-checking
- Open-circuit detection for all voltage and 4-20mA inputs
- Configurable scaling and offsets per channel
- High alarm, low alarm, high-high alarm, low-low alarm detection and reporting selectable per channel
- Module fault reporting
- Supports diagnostic point fault contacts in the logic program
- Flash memory for future upgrades
- Positive and negative Rate of Change Alarms
- Auto-calibration at startup
- Configurable interrupts for channel alarms and faults
- Terminal Block insertion or removal detection
- Version 5.0 HART communications
- These modules must be located in an RX3i Universal Backplane.

Modules support insertion into and removal from an RX3i Universal Backplane which is under power. Refer to Section 2.6.4, *Hot Insertion and Removal*. Modules can be used with a Box-style (IC694TBB032), Extended Box-style (IC694TBB132), Spring-style (IC694TBS032), or Extended Spring-style (IC694TBS132) Terminal Block. Extended terminal blocks provide the extra shroud depth needed for shielded wiring. Terminal Blocks are ordered separately.

11.2.2 Specifications: ALG626 and ALG628

ALG626/ALG628	**Specifications**			
Input Ranges	Current: 0 to 20mA, 4 to 20mA, ±20 mA Voltage: ±10 Vdc, 0 to 10 Vdc, ±5 Vdc, 0 to 5 Vdc, 1 to 5 Vdc			
Backplane Power Requirements	**Module**	**FB & later**	**EA & earlier**	**Specification**
	ALG626	400 200	600 625	mA maximum at 5.0 V +5% / - 2.5% mA maximum at 3.3 V +5% / - 3%
	ALG628	260 200	450 625	mA maximum at 5.0 V +5% / - 2.5% mA maximum at 3.3 V +5% / - 3%
Power Dissipation within Module	**Module**	**FB & later**	**EA & earlier**	**Specification**
	ALG626	4.50	7.35	Watts maximum
	ALG628	2.83	5.55	Watts maximum
Thermal De-rating	Module IC695ALG628 has no thermal derating. Module IC695ALG626 has no thermal derating in voltage mode. Thermal derating for IC695ALG626 in current mode is shown in Figure 327.			
Resolution	Refer to *Resolution and Range* Type table below.			
Input Data Format	Configurable as floating-point IEEE 32-bit or 16-bit integer in a 32-bit field.			
Filter Options	8 Hz, 12 Hz, 16 Hz, 40 Hz, 200 Hz, 500 Hz			
Analog Module Scan Time (ms)	Module scan can consist of up to four acquisition cycles. Each cycle includes a specific set of channels, as described in the *Channel Scanning* section below. Total Scan Time depends on the number of acquisition cycles in the scan, the configured filter option, and whether the channels are analog or HART.			

Configured Filter	***Number of Acquisition Cycles in the Scan***							
	1		2		3		4	
	Analog	HART	Analog	HART	Analog	HART	Analog	HART
8 Hz filter	121	128	241	254	362	380	482	506
12 Hz filter	81	88	161	174	242	260	322	346
16 Hz filter	61	68	121	134	182	200	242	266
40 Hz filter	21	28	41	54	62	80	82	106
200 Hz filter	5	12	9	22	14	32	18	42
500 Hz filter	3	N/A	5	N/A	7	N/A	9	N/A
500 Hz filter with rate detection enabled	N/A	N/A	6	N/A	9	N/A	12	N/A

ALG626/ALG628	Specifications		
HART Data Scan Time (in seconds)	The HART data scan can consist of up to four acquisition cycles (similar but asynchronous to the analog scan time). Each cycle includes a specific set of channels: For ALG626 single ended: channels 1-4, 5-8, 9-12, 13-16 are separate channel groups For ALG626 differential: channels 1-2, 3-4, 5-6, 7-8 are separate channel groups. For ALG628 single ended: channels 1-4, 5-8 are separate channel groups. For ALG628 differential: channels 1-2, 3-4 are separate channel groups. Note: If you have only four Hart Devices on an ALG626 module, to minimize update times it is best to connect them to channels 1, 5, 9, and 13 so you only have one Hart-enabled channel per channel group. Total HART scan time depends on the number of acquisition cycles in the scan, number of retries, enabling/disabling of slot variables, and use of Pass-Through commands. If slot variables are enabled, update times are doubled.		
	# Channels in Group Enabled for HART:	***Each HART Data Channel updates every:***	
	1	0.7 second (typical)	
	2	1.9 seconds (typical)	
	3	3.0 seconds (typical)	
	4	4.0 seconds (typical)	
Input Impedance	>100 kΩ voltage inputs		
Current Input Resistance	249 Ω ±1%		
Open Circuit Detection time	1 second maximum		
Overvoltage	±60 Vdc continuous, maximum		
Overcurrent	±28 mA continuous, maximum		
Normal Mode Noise Rejection in dB		*At 50 Hz*	*At 60 Hz*
	8 Hz filter	85	85
	12 Hz filter	85	85
	16 Hz filter	35	62
	40 Hz filter	3	6
	200 Hz filter	0	0
	500 Hz	0	0
Common Mode Noise Rejection	120 dB minimum at 50/60 Hz with 8 Hz filter 110 dB minimum at 50/60 Hz with 12 Hz filter		
Channel-Channel DC Crosstalk	-80 dB minimum (single ended mode) -80 dB minimum (differential mode, grounded common) -60 dB minimum (differential mode, floating common)		
Calibrated Accuracy[69] at 13°C – 33°C with	±5 Vdc, ±10 Vdc, ±20 mA		0.05% of range
	0 to 10 Vdc, 0 to 5 Vdc, 1 to 5 Vdc, 0 to 20 mA		0.1% of range

[69] *In the presence of severe RF interference (IC 801-3, 10V/m), accuracy may be degraded to ±1% FS.*

ALG626/ALG628	Specifications	
8 Hz, 12 Hz and 16 Hz filter	4 to 20 mA	0.125% of range
Calibrated Accuracy[69] at 0°C – 60°C with 8 Hz, 12 Hz and 16 Hz filter	0 to 10 Vdc, 0 to 5 Vdc, 1 to 5 Vdc	0.2% of range
	0 to 20 mA	0.25% of range
	4 to 20 mA	0.3125% of range
	±5 Vdc, ±10 Vdc	0.1% of range
	±20 mA	0.125% of range
Calibration Viability	Factory calibration is valid for 12 months for all ranges and operating conditions.	
Isolation Voltage terminal block to backplane/chassis	Opto-isolated, transformer isolated 250 Vac continuous/1500 Vdc for 1 minute	

For product standards and general specifications, refer to Appendix A:.

Thermal Derating: ALG626 Current Mode

For module IC695ALG626 in current mode, the number of inputs that can be on at the same time depends on the ambient temperature as displayed in Figure 327.

Figure 327: Thermal Derating ALG626 Current Mode

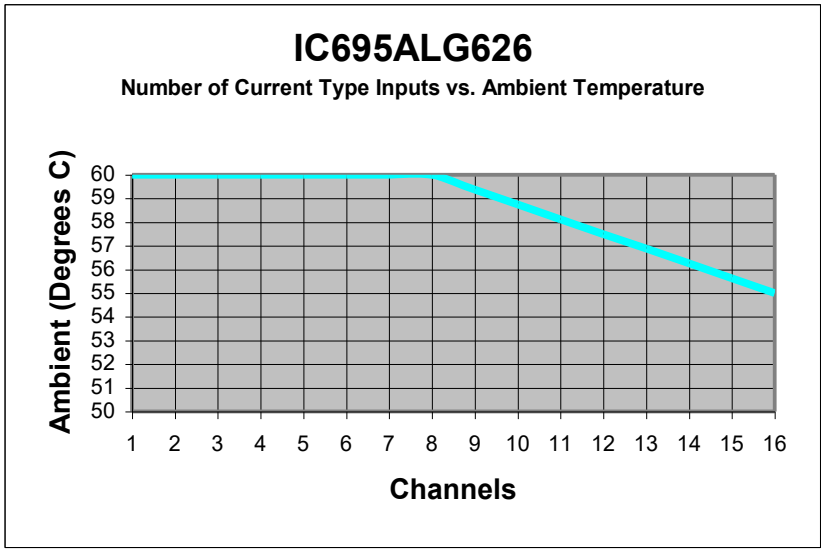

LEDs

Module **OK** LED indicates module status. The **Field Status** LED indicates the presence of a fault on at least one channel or a terminal block error. The TB (Terminal Block) LED indicates the presence or absence of the terminal block. LEDs are powered from the backplane power bus.

LED	State	Indicates
Module OK	ON Green	Module OK and configured
	Green or Amber, blinking slowly	Error
	Green, blinking rapidly	Module OK but not configured
	OFF	Module is defective or no backplane power present
Field Status	ON Green	No faults on any enabled channel, and Terminal Block is present
	ON Yellow	Fault on at least one channel
	OFF	Terminal block not present or not fully seated
TB	ON Red	Terminal block not present or not fully seated
	ON Green	Terminal block is present
	OFF	No backplane power to module

11.2.3 Configuration: ALG626 and ALG628

Module Parameters

Parameter	Default	Description
Channel Value Reference Address	%AIxxxxx	Starting address for the input data of this module. This defaults to the next available %AI block. The format of this data is shown in Section 11.2.4, *Channel Value Reference Data: ALG626 and ALG628*.
Channel Value Reference Length	ALG628: 16 ALG626: 32	The number of words used for the input data of this module. This parameter cannot be changed.
Diagnostic Reference Address	%Ixxxxx	Starting address for the channel diagnostics status data. The format of this data is shown in Section 11.2.4*, Input Channel Diagnostic Reference Data: ALG626 and ALG628*.
Diagnostic Reference Length	0	The number of bit reference bits required for the Channel Diagnostics data. When set to 0, Channel Diagnostics is disabled. To enable Channel Diagnostics mapping, change this to a non-zero value.
Module Status Reference Address	%Ixxxxx	Starting address for the status data of this module. The format of this data is shown in Section 11.2.4, *Module Status Reference Data: ALG626 and ALG628.*
Module Status Reference Length	0	The number of bits (0 to 32) required for Module Status data. When set to 0, mapping of Module Status data is disabled. To enable Module Status data mapping, change this to a non-zero value.
HART Data Scan Control	No data	Selects whether the CPU will automatically scan from the HART module: no data, changed data only, or all data for each HART-enabled channel. Refer to the below for details of memory usage. Dynamic Data Only: the first 18 words or 288 bits of HART data per input device. All Data: all of the HART data (88 words or 1408 bits for each HART input device.
HART Pass-Through Service Options	Once per two channel scans	Selects whether Module will automatically service a HART pass-through command in each 1, 2, or 4 channel scans or only upon change of the HART device configuration or if data hasn't been read for 10 seconds (Pass-Through Only). If Pass-Through Only is selected, scan data is not automatically available to the application program. However, it can be read using COMMREQ 1.
HART Status Reference Address		Starting address for the HART Status data. The format of this data is shown on in Section 11.5.1.
HART Status Reference Length		Length of the HART Status data; 4 words or 64 bits.

Parameter	Default	Description	
HART Data Reference Address		Starting address for the HART data for Module in %I, %Q, %AI, %AQ, %R, %W, %G, %M, or %T memory. The format of this data is shown in Section 11.4.1.	
HART Data Reference Length	0	Length of the HART data. If Data Scan Control is set to no data, the length is 0. The length is automatically set according to the selection made for HART Data Scan Control	
		HART Data Scan Control	HART Data Reference Length
		No Data	0
		Dynamic Data Only	Highest HART-enabled Channel Number X (18 words or 288 bits)
		All Data	Highest HART-enabled Channel Number X (88 words or 1408 bits)
I/O Scan Set	1	Assigns Module I/O status data to a scan set defined in the CPU configuration. Determines how often the RX3i polls the data	
Inputs Default	Force Off	In the event of module failure or removal, this parameter specifies the state of all Channel Value References for Module. Force Off = Channel Values clear to 0. Hold Last State = Channel Values hold their last state.	
Inputs Default w/o Terminal Block	Enabled	Enabled / Disabled: Controls whether inputs will be set to their defaults if the Terminal Block is removed.	
Channel Faults w/o Terminal Block	Disabled	Enabled / Disabled: Controls whether channel faults and configured alarm responses will be generated after a Terminal Block removal. The default setting of Disabled means channel faults and alarms are suppressed when the Terminal Block is removed. This parameter does not affect module faults including the Terminal Block loss/add fault generation.	
Analog Input Mode	Single-ended Input Mode	Single-ended / Differential: This selection must match the input wiring to Module.	
A/D Filter Frequency	40 Hz	Low pass A/D hardware filter setting for all inputs on Module: 8, 12, 16, 40, 200, or 500 Hz. Default is 40 Hz. Frequencies below the filter setting are not filtered by hardware.	

Channel Parameters

Parameter	Default	Description
Range Type	Disabled	Current/Voltage, Disabled
Range (Not for Range Type Disabled)	-10 to +10 Vdc	For Current/Voltage: -10 to +10 Vdc, 0 to +10 Vdc, 0 to +5 Vdc, 1 to +5 Vdc, -5 to +5 Vdc, -20 to +20 mA, 4 to 20 mA, 0 to 20 mA
Channel Value Format	32-bit Floating-point	16-bit integer or 32-bit floating-point
High Scale Value (Eng Units)	The defaults for the four Scaling parameters depend on the configured Range Type and Range. Each Range and Range Type have a different set of defaults.	Note: Scaling is disabled if both High Scale Eng. Units equals High Scale A/D Units and Low Scale Eng. Units equals Low Scale A/D Units. Default is High A/D Limit of selected range type.
Low Scale Value (Eng Units)		Default is Low A/D Limit of selected range type. Must be lower than the high scaling value.
High Scale Value (A/D Units)		Default is High A/D Limit of selected range type. Must be greater than the low scaling value.
Low Scale Value (A/D Units)		Default is Low A/D Limit of selected range type.

Input Scaling: ALG626 and ALG628

By default, Module converts a voltage or current input over the entire span of its configured Range into a floating-point value for the CPU. For example, if the Range of a channel is 4 to 20 mA, Module reports channel input values from 4.000 to 20.000. By modifying one or more of the four channel scaling parameters (Low/High Scale Value parameters) from their defaults, the scaled Engineering Unit range can be changed for a specific application. Scaling can provide inputs to the PLC that are already converted to their physical meaning or convert input values into a range that is easier for the application to interpret. Scaling is always linear and inverse scaling is possible. All alarm values apply to the scaled Engineering Units value, not to the A/D input value.

The scaling parameters only set up the linear relationship between two sets of corresponding values. They do not have to be the limits of the input.

Example 1

For a voltage input, 6.0 V represents a speed of 20 fos, and 1.0 V represents 0 fps. The relationship in this range is linear. For this example, the input values should represent speed rather than volts. The following channel configuration sets up this scaling:

High Scale Value (Eng Units) = 20.000

Low Scale Value (Eng Units) = 0.000

High Scale Value (A/D Units) = 6.000

Low Scale Value (A/D Units) = 1.000

For this example, 1.0 to 6.0 Vdc is the normal voltage range, but Module will attempt to scale the inputs for a voltage that lies outside the range. If a voltage of 10.0 V were input to the channel, Module would return a scaled channel value of 36.000. The application should use alarms or take other precautions for scaled inputs that are outside the acceptable range or invalid.

Figure 328: Scaling Example ALG626/ALG628

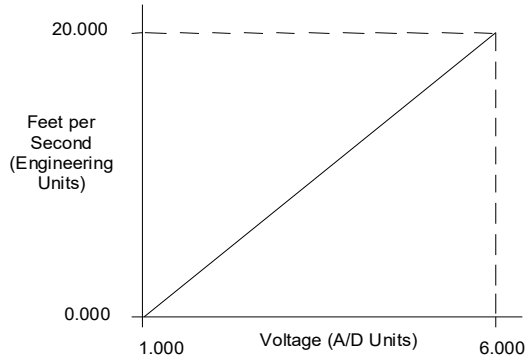

Example 2

An existing application uses traditional analog to digital (A/D) count integer values. With scaling and the optional 16-bit integer input option, a channel can be configured to report integer count values. In this example, the application should interpret +10 Vdc as 32000 counts and -10 Vdc as -32000 counts. The following channel configuration will scale a ±10 Vdc input channel to ±32000 counts.

Channel Value Format = 16-bit Integer

High Scale Value (Eng Units) = 32000.0

Low Scale Value (Eng Units) = -32000.0

High Scale Value (A/D Units) = 10.000

Low Scale Value (A/D Units) = -10.000

Figure 329: Scaling Example ALG626/ALG628

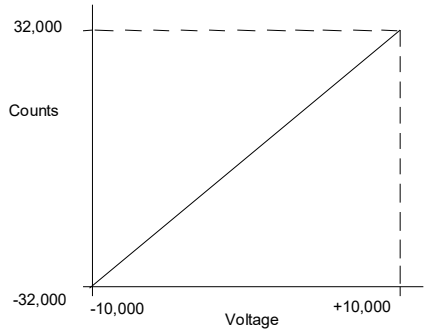
32,000
Counts
-32,000
-10,000
Voltage
+10,000

Channel Parameters (Continued)

Parameter	Default	Description
Positive Rate of Change Limit (Eng Units)	0.0	Rate of change in Engineering Units per Second that will trigger a Positive Rate of Change alarm. Default is disabled. Used with “Rate of Change Sampling Rate” parameter.
Negative Rate of Change Limit (Eng Units)	0.0	Rate of change in Engineering Units per Second that will trigger a Negative Rate of Change alarm. Default is disabled. Used with “Rate of Change Sampling Rate” parameter.
Rate of Change Sampling Rate	0.0	Time to wait between comparisons (from 0 to 300 seconds). Default of 0.0 is to check after every input sample.

Rate of Change Alarms: ALG626 and ALG628

These modules can detect both Negative Rate of Change and Positive Rate of Change in Engineering Units per Second. When either Rate of Change parameter is configured to be non-zero, Module takes the difference in Engineering Units between the previous rate of change sample and the current sample, then divides by the elapsed time between samples.

If the Engineering Units change from the previous sample to current sample is negative, Module compares the rate change with the Negative Rate of Change parameter.

If the Engineering Units change between samples is positive, Module compares the results in comparing the rate change with the Positive Rate of Change parameter value.

In either case, if the rate of change is greater than the configured rate, a rate of change alarm occurs. The actions taken by Module following the alarm depend on the enabled rate of change actions that have been set up in the "Diagnostic Reporting Enable", "Fault Reporting Enable", and "Interrupts Enabled" parameters.

The Rate of Change Sampling Rate parameter determines how frequently Module compares the Rate of Change. If the Rate of Change Sampling Rate is 0 or any time period less than the channel update rate, Module compares the Rate of Change for every input sample of the channel.

Channel Parameters (Continued)

Parameter	Default	Description
High-High Alarm (Eng Units)	The defaults for the High-High, High, Low, and Low-Low parameters depend on the configured Range Type and Range. Each Range and Range Type has a different set of default values.	Alarms and Deadbands All of the alarm parameters are specified in Engineering Units. To use alarming, the A/D Alarm Mode must also be configured as enabled. *High-High Alarm and Low-Low Alarm:* When the configured value is reached or passed, a Low-Low Alarm or High-High Alarm is triggered. The configured values must be lower than/higher than the corresponding low/high alarm limits. *High Alarm and Low Alarm:* When the configured value is reached or below (above), a Low (High) Alarm is triggered. High and Low Alarm Deadbands: A range in Engineering Units above the alarm condition (low deadband) or below the alarm condition (high deadband) where the alarm status bit can remain set even after the alarm condition goes away. For the alarm status to clear, the channel input must fall outside the deadband range. Alarm Deadbands should not cause the alarm clear condition to be outside the Engineering Unit User Limits range. For example, if the engineering unit range for a channel is -1000.0 to +1000.0 and a High Alarm is set at +100.0, the High Alarm Deadband value range is 0.0 to less than 1100.0. A deadband of 1100.0 or more would put the High Alarm clear condition below –1000.0 units making the alarm impossible to clear within the limits.
High Alarm (Eng Units)		
Low Alarm (Eng Units)		
Low-Low Alarm (Eng Units)		
High-High Alarm Deadband (Eng Units)		
High Alarm Deadband (Eng Units)		
Low Alarm Deadband (Eng Units)		
Low-Low Alarm Deadband (Eng Units)		
User Offset	0.0	Engineering Units offset to change the base of the input channel. This value is added to the scaled value on the channel prior to alarm checking.
Software Filtering	Disabled	Disabled / Enabled. Controls whether software filtering will be performed on the inputs.
Integration Time (ms)	0	Specifies the amount of time in milliseconds for the software filter to reach 63.2% of the input value. A value of 0 indicates software filter is disabled. A value of 100 indicates data will achieve 63.2% of its value in 100 ms. Default is 0.

Using Alarming: ALG626 and ALG628

The Diagnostic Reporting Enable, Fault Reporting Enable, and Interrupt Enable configuration parameters can be used to enable different types of responses for individual channel alarms. By default, all responses are disabled on every channel. Any combination of alarm enables can be configured for each channel.

- If Diagnostic Reporting is enabled, Module reports channel alarms in reference memory at the Diagnostic Reference address configured for that channel.
- If Fault Reporting is enabled, Module logs a fault log in the I/O Fault table for each occurrence of a channel alarm.
- If Interrupts are enabled, an alarm can trigger execution of an Interrupt Block in the application program, as explained below.

Using Interrupts

To properly configure an I/O Interrupt, the Interrupt enable bit or bits must be set in the configuration profile of this module. In addition, the program block that should be executed in response to the channel interrupt must be mapped to the reference address corresponding to that channel.

Example:
In this example, the Channel Values Reference Address block is mapped to %AI0001-%AI0020. An I/O Interrupt block should be triggered if a High Alarm condition occurs on channel 2.

- Configure the High-Alarm condition.
- Set the High-Alarm Interrupt Enable flag for Channel 2 in Module configuration.

The reference address for Channel 2 corresponds to %AI00003 (2 Words per channel), so the interrupt program block Scheduling properties should be set for the "I/O Interrupt" Type and "%AI0003" as the Trigger.

Fault Reporting and Interrupts

These modules have separate enable/disable options for Diagnostic Reporting and Interrupts. Normally, disabling a diagnostic (such as Low/High Alarm or Over/Under range) in the configuration means that its diagnostic bit is never set. However, if interrupts are enabled for a condition and that interrupt occurs, the diagnostic bit for that condition is also set during the I/O Interrupt block logic execution. The next PLC

input scan always clears this interrupt status bit back to 0, because Diagnostic Reporting has it disabled.

Channel Parameters (Continued)

Parameter	Default	Description
HART Communications	Disabled	Enabled/disabled. Set this to *enabled* if the channel will use HART communications. Enabling HART communications on a channel forces the channel to 4 to 20 mA operation.
HART Slot Variables	Disabled	Enabled/disabled. If HART Slot Variables is enabled, Module will periodically send HART command #33 to request data. Channel variables will be read and placed in the HART scan block channel data. For each slot, the variable assignment code can be set between 0 and 255.
Slot Code 0, 1, 2, 3	1	The slot transmitter variable assignment code that will be used to retrieve data from the connected HART device. This is used with HART Pass-Through command 33, byte 0. These values are used in the request data for HART command #33.

11.2.4 Input Module Data Formats: ALG626 and ALG628

This section explains how Module uses separate reference areas that can be assigned during module configuration:

- *Channel Value Reference Data*, required memory for the analog input channel values.
- *Input Channel Diagnostic Reference Data*, optional memory for channel faults and alarms.
- *Module Status Reference Data,* optional memory for general module status data.

In addition, during configuration, optional *HART Reference Data,* memory can be assigned. Refer to the section “HART Reference Data” later in this chapter for details.

Channel Value Reference Data: ALG626 and ALG628

Module reports its input channel data in its configured *Channel Value Reference* input words, beginning at its assigned Channel Value Reference Address. Each channel value occupies 2 words, whether the channel is used or not:

Channel Value Reference Address	Contains this Input
+0, 1	Channel 1
+2, 3	Channel 2
+4, 5	Channel 3
+6, 7	Channel 4
+8, 9	Channel 5
+10, 11	Channel 6
+12, 13	Channel 7
+14, 15	Channel 8
For Module IC695ALG626 Only:	
+16, 17	Channel 9
+18, 19	Channel 10
+20, 21	Channel 11
+22, 23	Channel 12
+24, 25	Channel 13
+26, 27	Channel 14
+28, 29	Channel 15
+30, 31	Channel 16

Depending on its configured Channel Value Format, each enabled channel reports a 32-bit floating-point or 16-bit integer value to the CPU.

In the 16-bit integer mode, the low word of the 32-bit channel data area contains the 16-bit integer channel value. The high word (upper 16-bits) of the 32-bit value is set with the sign extension of the 16-bit integer. This sign-extended upper word allows the 16-bit integer to be read as a 32-bit integer type in logic without losing the sign of the integer. If the 16-bit integer result is negative, the upper word in the 32-bit channel data has the value 0xFFFF. If the 16-bit integer result is positive, the upper word is 0x0000.

Resolution and Range Type

The actual resolution for each input depends on the Range Type and A/D Filter Frequency configured for that channel. At higher Filter Frequencies, input resolution decreases. The approximate resolution in bits for each Filter Frequency and Range Type are displayed in the following table.

Filter Frequency	Range Type		
	±10 Vdc	0 to 10 Vdc, ±5 Vdc, ±20 Vdc	0 to 5 Vdc, 1 to 5 Vdc, 0 to 20 mA, 4 to 20 mA
8 Hz	18	17	16
12 Hz	17	16	15
16 Hz	17	16	15
40 Hz	16	15	14
200 Hz	15	14	13
500 Hz	14	13	12

Channel Scanning

These modules use 4 A/D converters to achieve the fastest possible channel scan times. Module has up to four acquisition cycles for each module scan. The acquisition cycles and channels acquired during each cycle are:

Acquisition Cycle	Channels Acquired	
	IC695ALG628	IC695ALG626
1	1, 5	1, 5, 9, 13
2	2, 6	2, 6, 10, 14
3	3, 7	3, 7, 11, 15
4	4, 8	4, 8, 12, 16

To bypass an acquisition cycle, all channels that would be acquired during that cycle must be disabled.

For fastest scan times, always wire by acquisition cycle. For example, if only eight channels were used on the 16-channel module, IC695ALG626, channels 1, 2, 5, 6, 9, 10, 13, and 14 should be used for optimum performance.

Input Channel Diagnostic Reference Data: ALG626 and ALG628

If Module is configured to use a *Diagnostic Reference Address*, it reports channel diagnostics status data to the CPU. The CPU stores this data at the *Diagnostic Reference Address* configured for this module. Use of this feature is optional.

The diagnostics data for each channel occupies 2 words (whether the channel is used or not):

Diagnostic Reference Address	Contains Diagnostics Data for:
+0, 1	Channel 1
+2, 3	Channel 2
+4, 5	Channel 3
+6, 7	Channel 4
+8, 9	Channel 5
+10, 11	Channel 6
+12, 13	Channel 7
+14, 15	Channel 8
For Module IC695ALG626 Only:	
+16, 17	Channel 9
+18, 19	Channel 10
+20, 21	Channel 11
+22, 23	Channel 12
+24, 25	Channel 13
+26, 27	Channel 14
+28, 29	Channel 15
+30, 31	Channel 16

When a diagnostic bit equals 1, the alarm or fault condition is present on the channel. When a bit equals 0 the alarm or fault condition is either not present or detection is not enabled in the configuration for that channel. For each channel, the format of this data is:

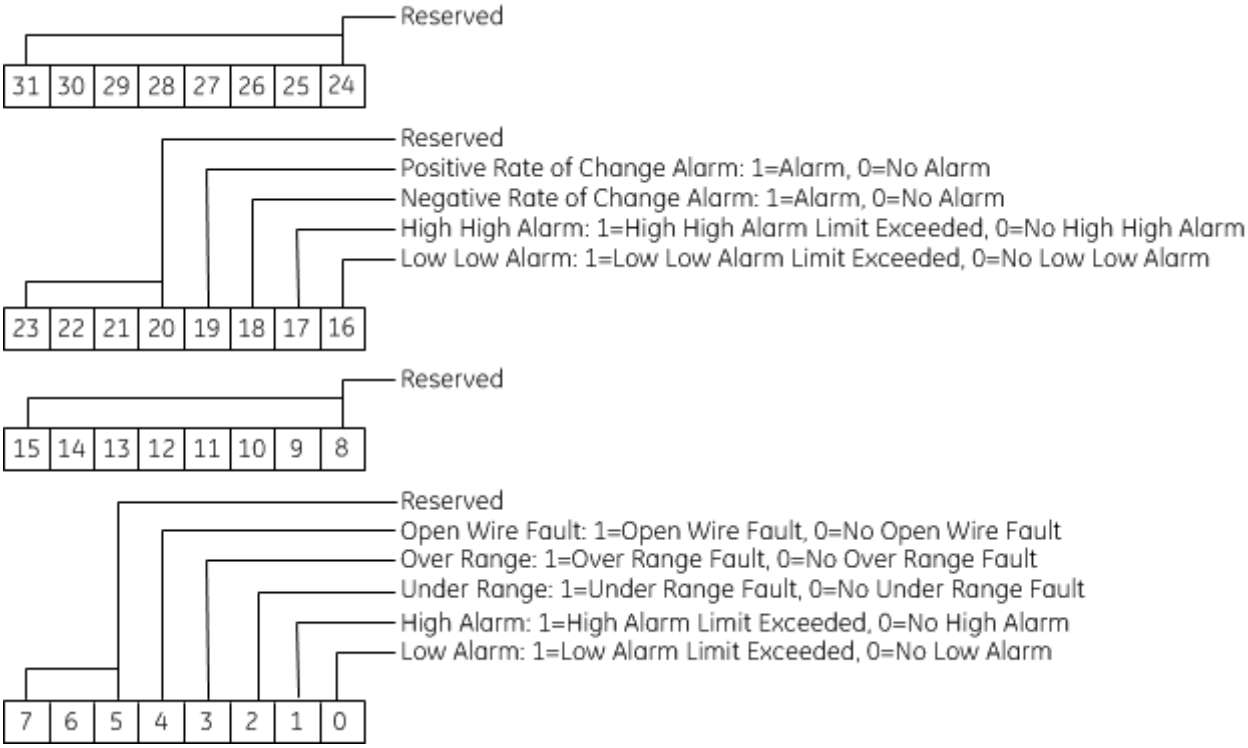

Module Status Reference Data: ALG626 and ALG628

Module can optionally be configured to return two bits of module status data to the CPU. The CPU stores this data in the 32-bit *Module Status Reference* area configured for this module.

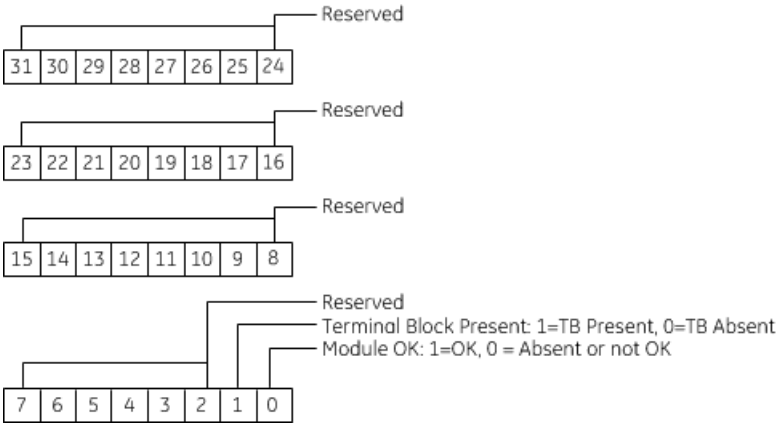

During operation, the PLC must be in an I/O Enabled mode for the current Module Status to be scanned and updated in reference memory.

Terminal Block Detection

Module automatically checks for the presence of a Terminal Block. The TB LED indicates the state of the terminal block of this module. It is green when the Terminal Block is present or red if it is not.

Faults are automatically logged in the CPU I/O Fault table when the terminal block is inserted or removed from a configured module in the system. The fault type is Field Fault and the fault description indicates whether the fault is a "Loss of terminal block" or an "Addition of terminal block." If a Terminal Block is not present while a configuration is being stored, a "Loss of terminal block" fault is logged.

Bit 2 of Module Status Reference indicates the status of the terminal block.

11.2.5 Field Wiring: IC695ALG626 and ALG628, Single-Ended Mode

The following table lists wiring connections for Single-ended mode.

Terminal	ALG628	ALG626	ALG628	ALG626	Terminal
1	Channel 1 IN+		Channel 1 Current Return (IRTN1)		19
2	Channel 2 IN+		Channel 2 Current Return (IRTN2)		20
3	Channel 3 IN+		Channel 3 Current Return (IRTN3)		21
4	Channel 4 IN+		Channel 4 Current Return (IRTN4)		22
5	Common		Common		23
6	Channel 5 IN+		Channel 5 Current Return (IRTN5)		24
7	Channel 6 IN+		Channel 6 Current Return (IRTN6)		25
8	Channel 7 IN+		Channel 7 Current Return (IRTN7)		26
9	Channel 8 IN+		Channel 8 Current Return (IRTN8)		27
10	No Connection	Channel 9 IN+	No Connection	Channel 9 Current Return (IRTN9)	28
11	No Connection	Channel 10 IN+	No Connection	Channel 10 Current Return (IRTN10)	29
12	No Connection	Channel 11 IN+	No Connection	Channel 11 Current Return (IRTN11)	30
13	No Connection	Channel 12 IN+	No Connection	Channel 12 Current Return (IRTN12)	31
14	Common		Common		32
15	No Connection	Channel 13 IN+	No Connection	Channel 13 Current Return (IRTN13)	33
16	No Connection	Channel 14 IN+	No Connection	Channel 14 Current Return (IRTN14)	34
17	No Connection	Channel 15 IN+	No Connection	Channel 15 Current Return (IRTN15)	35
18	No Connection	Channel 16 IN+	No Connection	Channel 16 Current Return (IRTN16)	36

There are no shield terminals on these modules. For shielding, tie the cable shields to the ground bar along the bottom of the backplane. M3 tapped holes are provided for this purpose.

All the common terminals are connected together internally, so any common terminal can be used for the negative lead of the external power supply.

Figure 330: Field Wiring Single-Ended ALG626 or ALG628

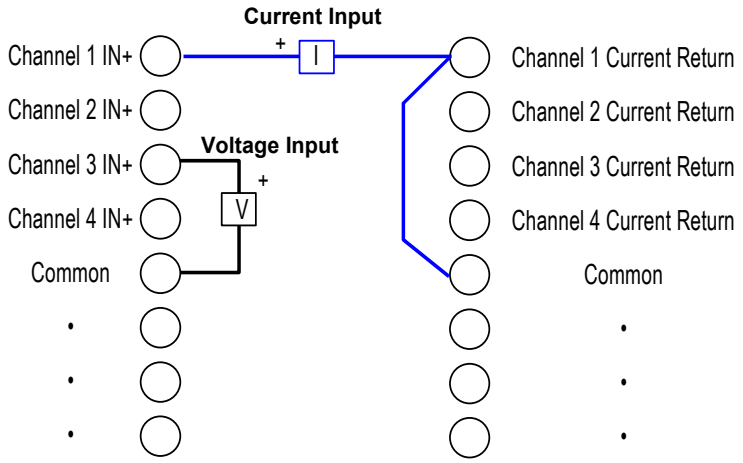

For single-ended mode, a voltage input should be connected between its Channel IN+ terminal and a Common (COM) return terminal.

A current input should be connected between its Channel IN+ terminal and its Channel Current Return Terminal. In addition, a jumper wire should be connected between the Channel Current Return terminal and a Common (COM) return.

11.2.6 Field Wiring: IC695ALG626 and ALG628, Differential Mode

The following table lists wiring connections for modules configured for Differential mode.

Terminal	ALG628	ALG626	ALG628	ALG626	Terminal
1	Channel 1 IN+		Channel 1 Current Return (IRTN1)		19
2	Channel 1 IN -		No Connection		20
3	Channel 2 IN+		Channel 2 Current Return (IRTN2)		21
4	Channel 2 IN -		No Connection		22
5	Common		Common		23
6	Channel 3 IN+		Channel 3 Current Return (IRTN3)		24
7	Channel 3 IN-		No Connection		25
8	Channel 4 IN+		Channel 4 Current Return (IRTN4)		26
9	Channel 4 IN-		No Connection		27
10	No Connection	Channel 5 IN+	No Connection	Channel 5 Current Return (IRTN5)	28
11	No Connection	Channel 5 IN-	No Connection		29
12	No Connection	Channel 6 IN+	No Connection	Channel 6 Current Return (IRTN6)	30
13	No Connection	Channel 6 IN-	No Connection		31
14	Common		Common		32
15	No Connection	Channel 7 IN+	No Connection	Channel 7 Current Return (IRTN7)	33
16	No Connection	Channel 7 IN-	No Connection		34
17	No Connection	Channel 8 IN+	No Connection	Channel 8 Current Return (IRTN8)	35
18	No Connection	Channel 8 IN-	No Connection		36

There are no shield terminals on these modules. For shielding, tie the cable shields to the ground bar along the bottom of the backplane. M3 tapped holes are provided for this purpose.

All the common terminals are connected together internally, so any common terminal can be used for the negative lead of the external power supply.

Figure 331: Field Wiring Differential Mode ALG626 or ALG628

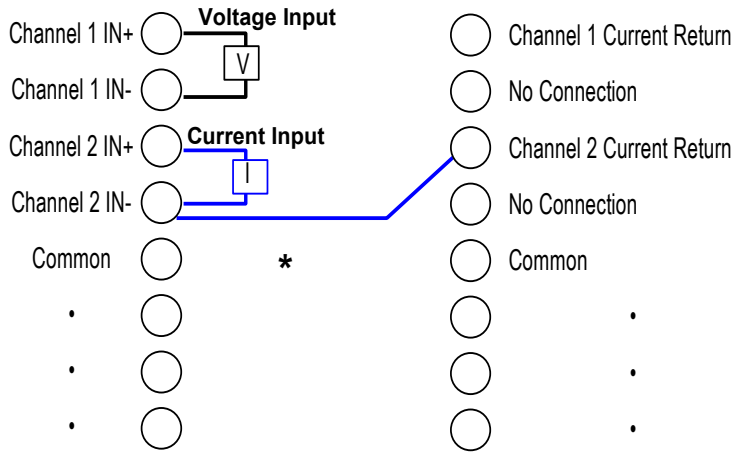

* Keep this jumper as short as possible to minimize error due to the added resistance of the wire. This resistance should be 25mΩ or less.

For differential inputs, two adjacent terminals are connected as one channel. The lower-numbered terminal acts as the high side.

A voltage input is connected between the two adjacent Channel IN terminals, as shown in Figure 331.

A current input is connected between the Channel IN+ and Current Return terminals for that channel. In addition, a jumper wire must be connected between the Channel IN - terminal and the corresponding Channel Current Return terminal.

Tie common to signal ground for improved channel-to-channel Crosstalk immunity.

Two door cards are provided with Module: one shows connections for single-ended mode and the other shows connections for differential. Insert the card that matches the wiring that will be used.

11.2.7 HART Device Connections

Example connections for 2-wire transmitters are displayed in the following figure.

Connecting Two-Wire Current Loop

Figure 332: HART 2-Wire Current Loop Connection

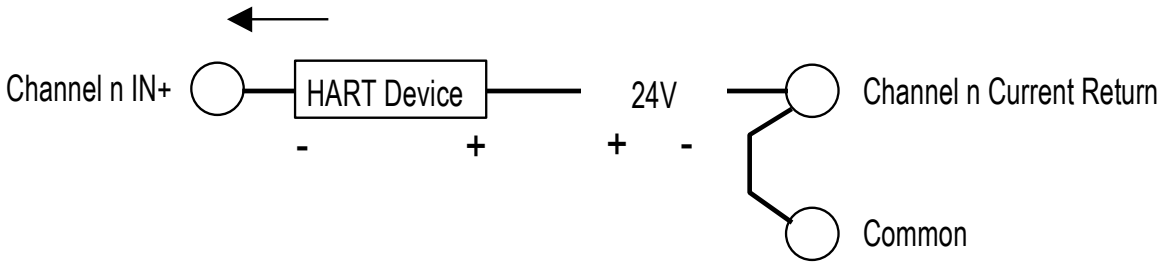

Connecting an Active-Source Device

Figure 333: HART Active Source Device Connection

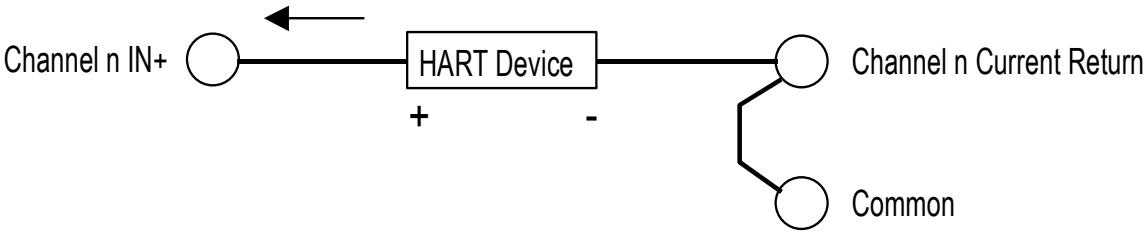

11.3 Analog Output Module 8-Channel Current/Voltage with HART: IC695ALG728

Figure 334:

IC695ALG728

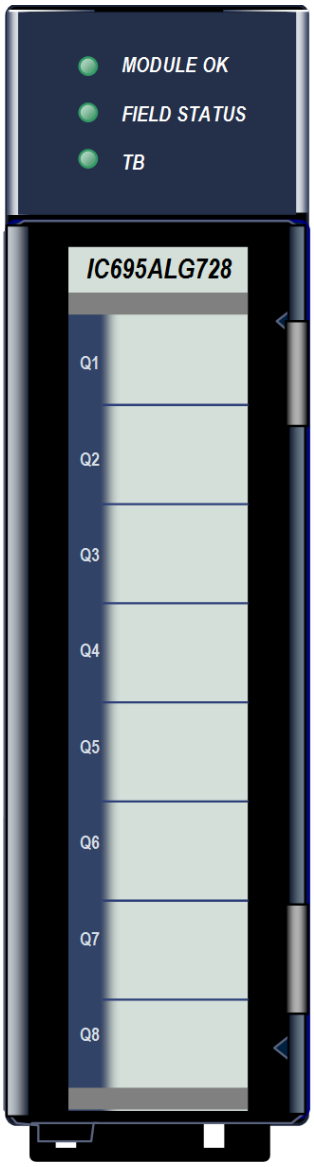

Non-Isolated Analog Current/Voltage Output module, IC695ALG728, provides eight configurable voltage or current output channels with HART version 5.0 communications capability on each channel. Module has two internal HART modems. Four single-ended channels are multiplexed with each HART modem.

Analog channels can be configured for these output ranges:

- Current: 0 to 20 mA, 4 to 20 mA
- Voltage: ±10 Vdc, 0 to 10 Vdc

Channels that will use HART communications must be configured for the 4-20mA range.

11.3.1 Features

- Completely software-configurable, no module jumpers to set
- Individually enable or disable channels
- Clamping and Alarm Limits
- Latching of Alarms
- Configurable output bias
- Rapid channel acquisition times based on filter frequency
- Full auto-calibration
- On-board error-checking
- Configurable scaling and offsets per channel
- High alarm, low alarm, high-high alarm, low-low alarm detection and reporting selectable per channel
- Module fault reporting
- Configurable Hold Last State or Output Defaults
- Version 5.0 HART communications
- Module must be located in an RX3i Universal Backplane.
- Module supports insertion into and removal from an RX3i Universal Backplane which is under power. Refer to *Hot Insertion and Removal*.
- Module supports firmware upgrades using the WinLoader software utility (if the host CPU has a serial port) or using a Web-based tool (if the host CPU has no serial port). Instructions are included with the firmware upgrade kit.[25]
- This module can be used with a Box-style (IC694TBB032), Extended Box-style (IC694TBB132), Spring-style (IC694TBS032), or Extended Spring-style (IC694TBS132) Terminal Block. Extended terminal blocks provide the extra shroud depth needed for shielded wiring. Terminal Blocks are ordered separately.

11.3.2 Isolated +24 Vdc Power

Module must receive its 24 Vdc power from an external source. The external source must be connected directly to the terminal block of this module. It cannot be connected via the TB1 connector on the RX3i Universal Backplane.

11.3.3 LEDs: ALG728

Module **OK** LED indicates module status. The **Field Status** LED indicates whether the external +24 Vdc power supply is present and is above the minimum level and whether or not faults are present. All LEDs are powered from the backplane power bus.

LED	State	Indicates
Module OK	ON Green	Module OK and configured
	Green or Amber, blinking slowly	Module OK but not configured
	Green, blinking rapidly	Module performing power-up sequence
	OFF	Module is defective or no backplane power present
Field Status	ON Green	No faults on any enabled channel, and Terminal Block is present
	ON Amber and TB Green	Terminal Block is installed, fault on at least one channel, or field power is not present
	ON Amber and TB Red	Terminal Block not fully removed, field power still detected.
	OFF and TB Red	Terminal block not present and no field power is detected.
TB	ON Red	Terminal block not present or not fully seated
	ON Green	Terminal block is present
	OFF	No backplane power to module

11.3.4 Specifications: ALG728

ALG728	Specifications
Output Ranges	Current: 0 to 20 mA, 4 to 20 mA Voltage: ±10 Vdc, 0 to 10 Vdc
Backplane Power Requirements	For ALG728-CB or earlier: 380 mA maximum at 3.3 Vdc For ALG728-DC or later: 250 mA maximum at 3.3 Vdc
Power Dissipation within Module (V_{user}=24 Vdc)	7.25 W maximum
Thermal Derating	Refer to *Thermal Derating Charts ALG728* below. Applies to Current Mode only.
External Power Supply V_{user}	Voltage Range: +19.2 to +30 Vdc Current required: 250 mA maximum
Resolution	±10 Vdc: 15.9 bits, 0 to 10 Vdc: 14.9 bits, 0 to 20 mA: 15.9 bits, 4 to 20 mA: 15.6 bits
HART Communications	Version 5.0 HART protocol
Output Data Format	Configurable as floating-point IEEE 32-bit or 16-bit integer in a 32-bit field
Analog Update Rate (Determined by I/O scan time, application dependent.)	16 ms with HART (approximate, all eight channels) 8 ms without HART (approximate, all eight channels)
HART Data Scan Time (in seconds) The HART data scan can consist of up to two acquisition cycles (similar but asynchronous to the analog scan time). Each cycle includes a specific set of channels. For ALG728: 1-4, 5-8 are separate channel groups. Total HART scan time depends on the number of acquisition cycles in the scan, number of retries, enabling/disabling of slot variables, and use of pass-through commands. If slot variables are enabled, update times are doubled.	
1 HART device in group	Each HART Data channel updates every 0.7 second (typical)
2 HART devices in group	Each HART Data channel updates every 1.9 seconds (typical)
Output Overvoltage Protection	Current outputs only: -30 V for 60 seconds, +30 V for one hour
Calibrated Accuracy[70]	Accurate to within 0.15% of full scale at 25°C Accurate to within 0.30% of full scale at 60°C
Output Load Reactance	Current: 10 µH maximum, Voltage: 1 µF maximum
Maximum Output Load	Current: 850 Ω maximum at V_{user} = 20 V Voltage: 2 kΩ minimum
Output Gain Drift	Voltage output: 20 ppm per degree C typical Current output: 35 ppm per degree C typical
Output Settling Time	Voltage Output: 2 ms, 0 to 95% Current output with HART: 70 ms, 0 to 95% Current output without HART: 23 ms, 0 to 95%
Isolation, Field to Backplane	2550 Vdc for one second
Maximum Compliance Voltage	V_{user} – 3 V (minimum) to V_{user} (maximum)

For product standards and general specifications, refer to Appendix A:.

[70] *In the presence of severe RF interference (IC 801-3, 10V/m), accuracy may be degraded to ±1% FS.*

Thermal Derating, ALG728 Current Mode

Figure 335: Thermal Derating Charts ALG728 Current Mode

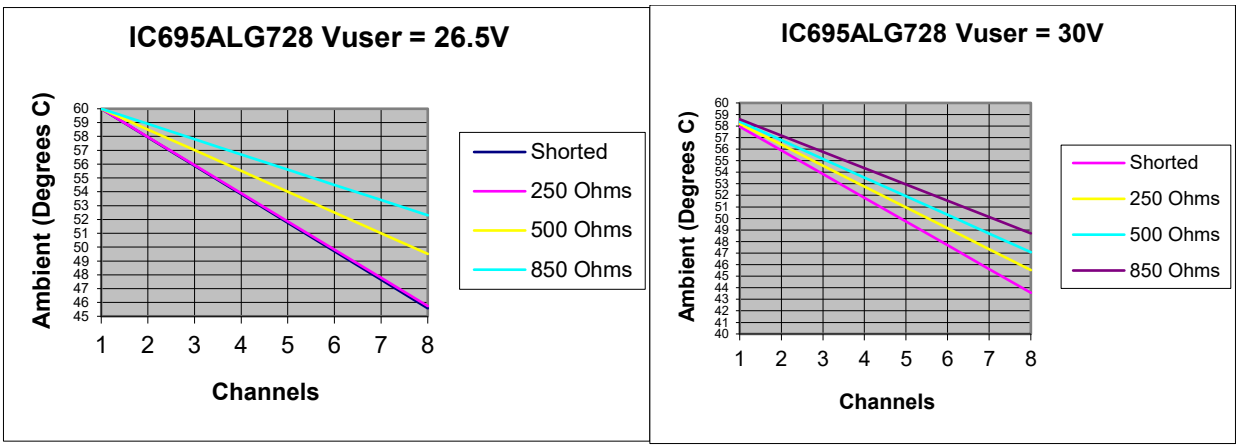

11.3.5 Configuration: ALG728

Module Parameters

Parameter	Default	Description
Outputs Reference Address	%AQxxxxx	Starting address for the output data of this module. This defaults to the next available %AQ block. The format of this data is shown on in Section 11.4.1.
Outputs Reference Length	ALG728: 16	The number of words used for the output data of this module. This parameter cannot be changed.
Output Command Feedback Reference Address	%AIxxxxx	Stating address for the command feedback data of this module. This defaults to the next available %AI address after a non-zero length is configured.
Output Command Feedback Length	0	The number of words used for the command feedback data of this module. Length defaults to 0. It can be set to 8 or 16, depending on Module type being configured.
Diagnostic Reference Address	%Ixxxxx	Starting address for the channel diagnostics status data. This defaults to the next available %I block. The format of this data is shown in Section 11.4.1, *Output Channel Diagnostic Reference Data: ALG728.*
Diagnostic Reference Length	0	Read Only. The number of bit reference bits required for the Channel Diagnostics data. Default is 0, which means mapping of Channel Diagnostics is disabled. Change this to a non-zero value to enable Channel Diagnostics mapping. Maximum length is 256 bits.
Module Status Reference Address	%Ixxxxx	Starting address for the status data of this module. This defaults to the next available %I block. The format of this data is shown in Section 11.4.1, *Module Status Data: ALG728*.
Module Status Reference Length	0	Read Only. The number of bits (0 or 32) required for Module Status data. Default is 0, which means mapping of Module Status data is disabled. Change this to a non-zero value to enable Module Status data mapping.

Analog Output Commanded Feedback

Module returns a copy of the analog output data received from CPU in its corresponding channel analog input shared memory. Output Feedback can be monitored to check the values being sent to the channels. The data is in the same scaled format as the output data for each channel. During normal operation, this feedback data should match the actual output data after one or more PLC scans of module

inputs. During faults, ramping, over-range, and clamping conditions, the analog output data may differ from the commanded output.

Over-Temperature

If Over-Temperature is enabled, Module generates an Over-Temperature alarm if the internal temperature of this module is too great for the number of outputs that are on at the same time. In addition to the configurable options for Over-Temperature fault reporting and interrupts, an over temperature condition is also indicated by the Over-Temperature bit in the Status Reference data of this module. Detection of the Over-temperature status bit is always enabled.

Module Parameters (Continued)

Parameter	Default	Description
HART Data Scan Control	No data	Selects whether the CPU will automatically scan from the HART module: no data, changed data only, or all data for each HART-enabled channel. Refer to the below for details of memory usage. Dynamic Data Only: the first 18 words or 288 bits of HART data per input device. All Data: all of the HART data (88 words or 1408 bits for each HART input device.
HART Pass-Through Service Options	Once per two channel scans	Selects whether Module will automatically service a HART pass-through command each 1, 2, or 4-channel scans or only upon change of HART device configuration, or if data hasn't been read for 10 seconds (Pass-Through Only). If Pass-Through Only is selected, scan data is not available to the application program.
HART Status Reference Address		Starting address of the HART Status data. Format of this data is shown in Section 11.5.1.
HART Status Reference Length		Length of the HART Status data; 4 words or 64 bits.
HART Data Reference Address		Starting address for the HART data of this module in %I, %Q, %AI, %AQ, %R, %W, %G, %M, or %T memory. Format of this data is shown in Section 11.4.1.
HART Data Reference Length	0	Length of the HART data. If Data Scan Control is set to no data, the length is 0. The length is automatically set according to the selection made for HART Data Scan Control:

HART Data Scan Control	HART Data Reference Length
No Data	0
Dynamic Data Only	Highest HART-enabled Channel Number X (18 words or 288 bits)
All Data	Highest HART-enabled Channel Number X (88 words or 1408 bits)

Parameter	Default	Description
I/O Scan Set	1	Assigns Module I/O status data to a scan set defined in the CPU configuration. Determines how often the RX3i polls the data
Channel Faults w/o Terminal Block	Disabled	Enabled / Disabled: Controls whether channel faults and configured alarm responses will be generated after a Terminal Block removal. The default setting of Disabled means channel faults and alarms are suppressed when the Terminal Block is removed. This parameter does not affect module faults including the Terminal Block loss/add fault generation.
Module Fault Reporting Enabled	Enabled	Enabled / Disabled. Controls whether Module will report faults resulting from either loss of field power or over-temperature conditions.
Field Power Removed Enabled	Enabled	Enabled / Disabled. With Module Fault Reporting enabled, this parameter controls reporting of Field Power Removed module faults.
Over Temp Enabled	Enabled	Enabled / Disabled. With Module Fault Reporting enabled, this parameter controls reporting of Over-temperature module faults.
Module Interrupt Reporting Enabled	Disabled	Enabled / Disabled.
Field Power Removed Enabled	Disabled	Enabled / Disabled. With Module Interrupt Reporting enabled, this parameter controls interrupts for Field Power Removed module faults.

Channel Parameters

Parameter	Default	Description
Range Type	Disabled Current	Sets up the type of output to be used for each channel. Choices are: Disabled Voltage, Disabled Current, Current/Voltage. Channels used for HART communications must have Range Type set to Current/Voltage.
Range (Only for Range Type Current/Voltage)	-10 to +10 Vdc	For Current/Voltage: -10 to +10 Vdc, 0 V to +10 Vdc, 4 to 20 mA, 0 to 20 mA. Channels used for HART communications must have Range set to 4 mA to 20 A.
Channel Value Format	32-bit Floating-point	16-bit integer or 32-bit floating-point
Outputs Default	Force to Default Value	Controls the state the output will be set to in Outputs Disabled mode (stop), if a fault occurs, if power is lost, or if the configuration is cleared. Choices are Hold Last State, or default to a specific configured default value.

Range Type

Each channel on Module that will be used should be configured for Current/Voltage. Its voltage or current range and other parameters can then be configured as needed. If the channel output will not be used and is not wired, select either “Disabled” option. If a channel is disabled, it is not necessary to configure any of its other parameters.

If the channel is wired to a current output, but is not being used, select "Disabled Current". This will set the output current for that channel to 0mA (the output voltage for that channel will be non-zero).

If the channel is wired to a voltage output, but is not being used, select "Disabled Voltage". This will set the output voltage for that channel to 0V (the output current for that channel will be non-zero).

Output Defaults

If Hold Last State is enabled, an output will hold its last commanded value when the CPU indicates Outputs Not Enabled, or if one of the fault conditions listed below occurs. If Hold Last State is disabled, the output is commanded to go to the Default Value. The Default Value must be set within the selected output range. If both Default Value and Ramp Rate are enabled, the channel will ramp to the default value. Fault conditions are:

- CPU outputs are not enabled
- Backplane power is not ok. In that case, there is no ramping, even if ramping is enabled.
- Loss of communications from CPU.
- Loss of I/O communications.
- Loss of field power.

Outputs Default Notes

- Hot Removal of Module in an I/O Enabled mode will cause all outputs to Hold Last State (even channels configured for Force to Default Value). If that operation is not desirable, the outputs can be forced to default by first turning off field power and removing the Terminal Block of this module before hot-removing Module.
- Resetting Module using SVC_REQ 24 causes all channels to Hold Last State even if Default Value is configured. The application program must handle output defaulting before execution of the Service Request.
- Default Ramp Rate configuration is ignored if backplane power from the power supply is lost. Channels configured for Default Value go to the default value immediately.
- The first time a configuration is stored following a return of backplane power, the Default Ramp rate is not used. Any channel configured for Default Value goes to its default value immediately. If analog power was not lost and the same configuration is restored on the next power-up, the channel state is unchanged from the time the power was lost. The Default Ramp Rate is used for any subsequent reconfiguration.

Output Default Conditions and Actions

Condition	Hold Last State or Default Value	Default Ramp Rate Enabled	Outputs Enabled and Ramp Rate Enabled	Channel Output Setting (Except where indicated, field power is assumed to be present).
Outputs Enabled and No Faults	N/A	N/A	No	Output goes to its commanded value from reference memory; defaults don't apply.
	N/A	N/A	Yes	Output is ramped to the commanded output from reference memory at the Outputs Enabled ramp rate. Defaults don't apply.
Outputs Disabled, Fault Mode, or Reconfiguration	Default Value	No	N/A	Output is set to the Default Value
	Default Value	Yes	N/A	Output is ramped to the Default Value at the Default ramp rate, starting at the last commanded value before entering mode.

Condition	Hold Last State or Default Value	Default Ramp Rate Enabled	Outputs Enabled and Ramp Rate Enabled	Channel Output Setting (Except where indicated, field power is assumed to be present).
	Hold Last State	N/A	N/A	Output is held at the last commanded value
Loss of Backplane Power or First Configuration Store after Power-up	Default Value	N/A	N/A	Output is set to the Default Value.
	Hold Last State	N/A	N/A	Output is held at last commanded value.
Hot Removal, Reset with SVCREQ 24 or Cleared Configuration	N/A	N/A	N/A	Output is held at last commanded value.
Loss of Field Power	N/A	N/A	N/A	All outputs go to 0V and 0mA.

Channel Parameters (Continued)

Parameter	Default	Description
High Scale Value (Eng Units)	The defaults for the four Scaling parameters depend on the configured Range Type and Range. Each Range and Range Type have a different set of defaults.	Note: Scaling is disabled if both High Scale Eng. Units equals High Scale A/D Units and Low Scale Eng. Units equals Low Scale A/D Units. Default = High A/D Limit of selected range type.
Low Scale Value (Eng Units)		Default is Low A/D Limit of selected range type. Must be lower than the high scaling value.
High Scale Value (A/D Units)		Default is High A/D Limit of selected range type. Must be greater than the low scaling value.
Low Scale Value (A/D Units)		Default is Low A/D Limit of selected range type.

Output Scaling: ALG728

By default, Module converts a floating-point value from the CPU into a voltage or current output over the entire span of its configured Range. For example, if the Range of a channel is 4 to 20 mA, Module accepts channel output values from 4.000 to 20.000. By modifying one or more of the four channel scaling parameters (Low/High Scale Value parameters) from their defaults, the scaled Engineering Unit range can be changed for a specific application. Scaling is always linear and inverse scaling is possible. All alarm values apply to the scaled Engineering Units value, not to the A/D units value.

The scaling parameters only set up the linear relationship between two sets of corresponding values. They do not have to be the limits of the output.

11.4 Example

In this example, the application should interpret 32000 counts as +10 Vdc and –32000 counts as -10 Vdc. The following channel configuration will scale a ±10 Vdc output channel to ±32000 counts.

Channel Value Format = 16-bit Integer

High Scale Value (Eng Units) = 32000.0

Low Scale Value (Eng Units) = -32000.0

High Scale Value (A/D Units) = 10.000

Low Scale Value (A/D Units) = -10.000

Figure 336: Scaling Example ALG728

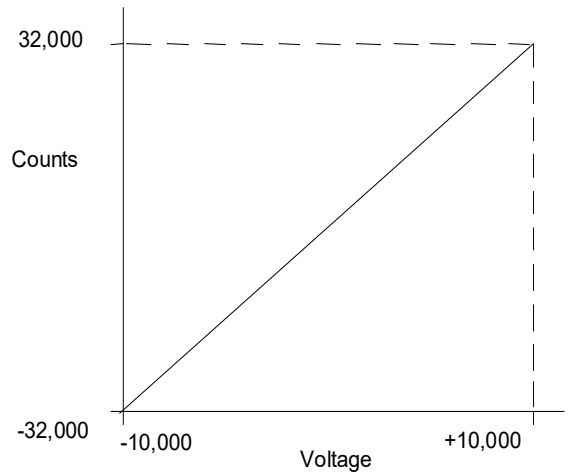

Channel Parameters (Continued)

Parameter	Default	Description
High Alarm (Eng Units)	The defaults depend on the configured Range.	All of the alarm parameters are specified in Engineering Units. When the configured value is reached or below (above), a Low (High) Alarm is triggered.
Low Alarm (Eng Units)		
Outputs Enabled Ramp Rate (Eng Units)	0.0	The rate in Engineering Units at which the output will change during normal operation.
Default Ramp Rate (Eng Units)	0.0	The rate in Engineering Units at which the output will change if a fault condition occurs or if outputs are not enabled.
Output Clamping Enabled	Disabled	Enabled / Disabled. Refer to description below.
Upper Clamp Limit (Eng Units)	The defaults depend on the configured Range.	The Upper Clamp Limit must be greater than the Lower Clamp Limit. This parameter can be used to restrict the output to a range that is narrower than its configured Range Type. For example, a channel configured for –10 to +10 Vdc could be restricted to -8 to +7.5 Vdc.
Lower Clamp Limit (Eng Units)		

Default Value (Eng Units)	0.0	If Hold Last State is disabled, the output is commanded to go to the Default Vale when the CPU is not in Outputs Enabled mode or under certain fault conditions.
User Offset (Eng Units)	0.0	A configurable value that can be used to change the base of the channel. This value is added to the scaled value of the channel before alarm-checking.

Lower, Upper Clamp and Alarms: ALG728

Alarms can be used to indicate when Module has been commanded to meet or exceed the configured high or low limits for each channel. These are set at six configurable alarm trigger points:

- High Alarm and Low Alarm
- Upper Clamp and Lower Clamp
- Over-range and Under-range Alarm

Each alarm is individually configurable per channel to generate diagnostics bit status, fault alarms, or interrupt alarms.

If a channel is commanded higher than the Upper Clamp value, the output is set to the Upper Clamp value and an Upper Clamp condition is indicated. If a channel is commanded lower than the Lower Clamp value, the output is set to the Lower Clamp value and a Lower Clamp condition is indicated.

The High and Low Alarm checks are performed on the engineering units output value after possibly being adjusted by ramping, clamping, and fault conditions.

Channel Parameters (Continued)

Parameter	Default	Description
Diagnostic Reporting Enable If Diagnostic Reporting is enabled, the additional parameters listed below can be used to enable specific types of alarms.	Disabled	Diagnostic Reporting Enable options are used to enable reference memory reporting of alarms into the Diagnostic Reference area. Fault Reporting Enable options enable fault logging of alarms into the I/O Fault Table. These parameters enable or disable the individual diagnostics features of a channel. When any of these parameters is enabled, Module uses associated parameters to perform the enabled feature. For example, if Over Range is enabled in the "Diagnostic Reporting Enable" menu, Module will set the Over Range bit in the Diagnostic Reference for the channel. If any of these parameters is disabled, Module does not react to the associated alarm conditions. For example, if Low Alarm Enable is set to Disabled in the "Fault Reporting Enable" menu, the Low Alarm fault is not logged in the I/O Fault Table when Low Alarm is detected on the channel.
Fault Reporting Enable If Fault Reporting is enabled, the additional parameters listed below can be used to enable specific types of Faults.	Disabled	
Interrupts Enable	Disabled	
Low Alarm Enable	Disabled	
High Alarm Enable	Disabled	
Under Range Enable	Disabled	
Over Range Enable	Disabled	
Lower Clamp Alarm Enable	Disabled	
Upper Clamp Alarm Enable	Disabled	

Alarming and Fault Reporting: ALG728

The Diagnostic Reporting Enable, Fault Reporting Enable, and Interrupt Enable configuration parameters can be used to enable different types of responses for individual channel alarms. By default, all responses are disabled on every channel. Any combination of alarm enables can be configured for each channel.

- If Diagnostic Reporting is enabled, Module reports channel alarms in reference memory at the Diagnostic Reference address configured for that channel.
- If Fault Reporting is enabled, Module logs a fault log in the I/O Fault table for each occurrence of a channel alarm.
- If Interrupts are enabled, an alarm can trigger execution of an Interrupt Block in the application program, as explained below.

Using Interrupts

To properly configure an I/O Interrupt, the Interrupt enable bit or bits must be set in the configuration profile of this module. In addition, the program block that should be executed in response to the channel

interrupt must be mapped to the reference address corresponding to that channel.

Example:

In this example, the Outputs Reference Address block is mapped to %AQ0001-%AQ0008. An I/O Interrupt block should be triggered if a High Alarm condition occurs on channel 2.

- Configure the High-Alarm condition.
- Set the High-Alarm Interrupt Enable flag for Channel 2 in Module configuration.

The reference address for Channel 2 corresponds to %AQ00003 (2 Words per channel), so the interrupt program block Scheduling properties should be set for the *I/O Interrupt* Type and *%AQ0003* as the Trigger.

Fault Reporting and Interrupts

These modules have separate enable/disable options for Diagnostic Reporting and Interrupts. Normally, disabling a diagnostic (such as Low/High Alarm or Over/Under range) in the configuration means that its diagnostic bit is never set. However, if interrupts are enabled for a condition and that interrupt occurs, the diagnostic bit for that condition is also set during the I/O Interrupt block logic execution. The next PLC input scan always clears this interrupt status bit back to 0, because Diagnostic Reporting has it disabled.

Channel Parameters (Continued)

Parameter	Default	Description
HART Communications	Disabled	Enabled/disabled. Set HART Communications to *enabled* if the channel will use HART communications. Enabling HART communications forces the channel to 4-20mA operation.
HART Slot Variables	Disabled	Enabled/disabled. If HART Slot Variables is enabled, Module will periodically send HART command #33 to request data. Channel variables will be read and placed in the HART scan block channel data. For each slot, the variable assignment code can be set between 0 and 255.
Slot Code 0, 1, 2, 3	1	The slot transmitter variable assignment code that will be used to retrieve data from the connected HART device. These values are used in the request data for HART command #33.

11.4.1 Output Module Data Formats: ALG728

This section explains how Module uses separate reference areas that can be assigned during module configuration:

- *Output Value Reference Data*, required memory for the analog output channel values.
- *Output Channel Diagnostic Reference Data*, optional memory for channel faults and alarms.
- *Module Status Reference Data,* optional memory for general module status data.

In addition, during configuration, optional *HART Reference Data,* memory can be assigned. Refer to the section “HART Reference Data” later in this chapter for details.

Output Value Reference Data: ALG728

Module receives its channel data from its configured output words, beginning at its assigned *Outputs Reference Address*. Each channel occupies 2 words, whether the channel is used or not:

Outputs Reference Address	Contains Data for:
+0, 1	Channel 1
+2, 3	Channel 2
+4, 5	Channel 3
+6, 7	Channel 4
+8, 9	Channel 5
+10, 11	Channel 6
+12, 13	Channel 7
+14, 15	Channel 8

Depending on its configured Channel Value Format, each enabled channel output reference location is read as a 32-bit floating-point or 16-bit integer value.

In the 16-bit integer mode, low word of the 32-bit channel data area contains the 16-bit integer channel value. The high word (upper 16-bits) of the 32-bits is ignored. The full range of the 16-bit integer is a signed decimal value from +32767 to –32768.

Because the channel reference location is 32 bits, it is possible for the application program to write 32-bit signed decimal values to the output reference. However, the program logic must restrict the magnitude of the value to the range +32767 to –32768. Exceeding this range will result in misinterpretation of the sign bit, and incorrect output channel operation.

Output Channel Diagnostic Reference Data: ALG728

Module can optionally be configured to report channel diagnostics status data to the CPU. The CPU stores this data at the *Diagnostic Reference Address* configured for this module. Use of this feature is optional.

The diagnostics data each channel occupies 2 words (whether the channel is used or not):

Diagnostic Reference Address	Contains Diagnostics Data for:
+0, 1	Channel 1
+2, 3	Channel 2
+4, 5	Channel 3
+6, 7	Channel 4
+8, 9	Channel 5
+10, 11	Channel 6
+12, 13	Channel 7
+14, 15	Channel 8

When a diagnostic bit equals 1, the alarm or fault condition is present on the channel. When a bit equals 0 the alarm or fault condition is either not present or detection is not enabled in the configuration for that channel.

For each channel, the format of this data is:

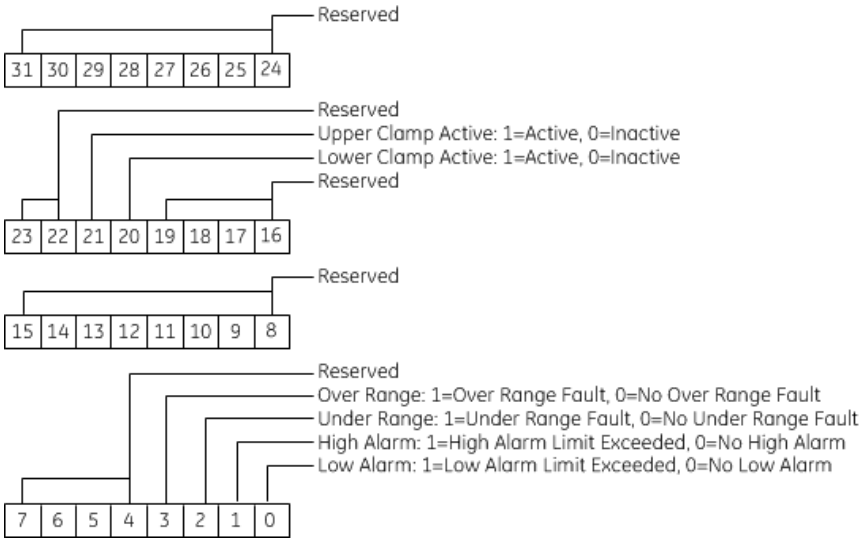

Module Status Data: ALG728

Module can also optionally be configured to return 4 bits of module status data to the CPU. The CPU stores this data in the 32-bit *Module Status Data reference* area configured for this module.

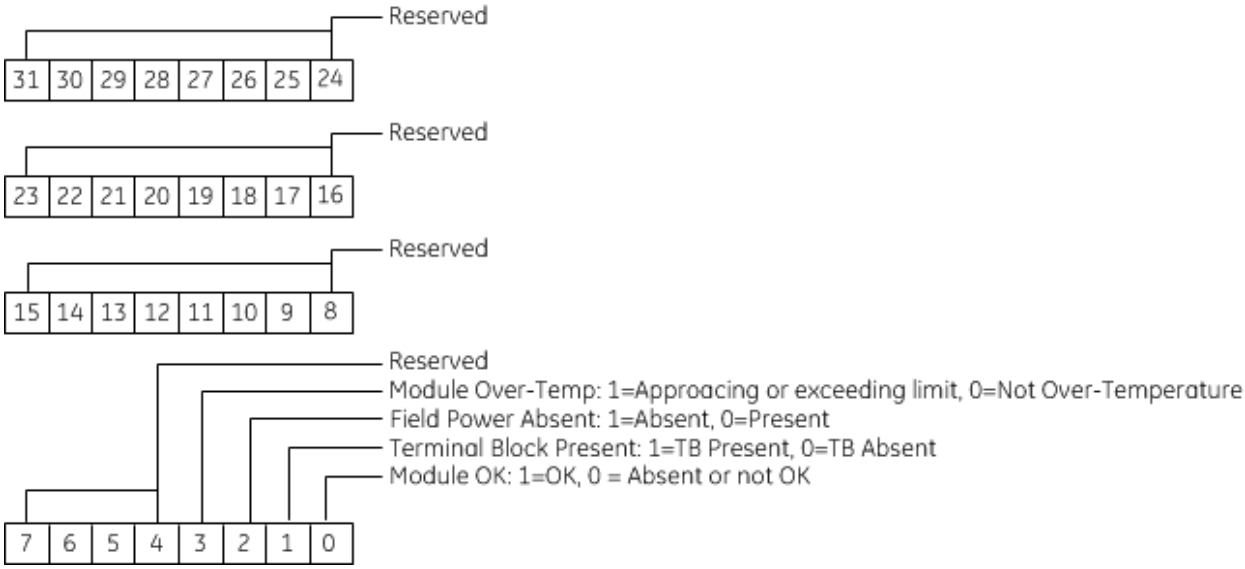

Terminal Block Detection

Module automatically checks for the presence of a Terminal Block. The TB LED indicates the state of the terminal block of this module. It is green when the Terminal Block is present or red if it is not.

Faults are automatically logged in the CPU I/O Fault table when the terminal block is inserted or removed from a configured module in the system. The fault type is Field Fault and the fault description indicates whether the fault is a "Loss of terminal block" or an "Addition of terminal block". If a Terminal Block is not present while a configuration is being stored, a "Loss of terminal block" fault is logged.

Bit 2 of Module Status Reference indicates the status of the terminal block. To enable Module Status reporting, Module Status Reference must be configured. During operation, the PLC must be in an I/O Enabled mode for the current Module Status to be scanned and updated in reference memory.

11.4.2 Field Wiring: ALG728

The following table lists wiring connections for Module. There are no shield terminals. For shielding, tie cable shields to the ground bar along the bottom of the backplane. M3 tapped holes are provide in the ground bar for this purpose.

Terminal	Assignment
1	Channel 2 Voltage Out
2	Channel 2 Current Out
3	Common (COM)
4	Channel 4 Voltage Out
5	Channel 4 Current Out
6	Common (COM)
7	Channel 6 Voltage Out
8	Channel 6 Current Out
9	Common (COM)
10	Channel 8 Voltage Out
11	Channel 8 Current Out
12	Common (COM)
13	Common (COM)
14	Common (COM)
15	Common (COM)
16	Common (COM)
17	Common (COM)
18	Common (COM)

Figure 337: Field Wiring ALG728

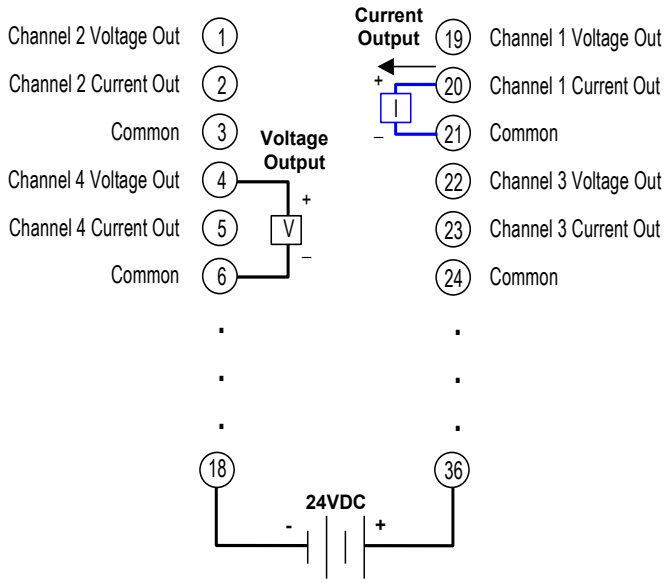

Assignment	Terminal
Channel 1 Voltage Out	19
Channel 1 Current Out	20
Common (COM)	21
Channel 3 Voltage Out	22
Channel 3 Current Out	23
Common (COM)	24
Channel 5 Voltage Out	25
Channel 5 Current Out	26
Common (COM)	27
Channel 7 Voltage Out	28
Channel 7 Current Out	29
Common (COM)	30
Common (COM)	31
Common (COM)	32
Common (COM)	33
Common (COM)	34
Common (COM)	35
+24V In	36

Each channel can be individually configured to operate as a voltage output or a current output, not both simultaneously. All the common terminals are connected together internally. Therefore, any common terminal can be used for the negative lead of the external power supply.

11.4.3 HART Device Connections

Example connections for 2-wire transmitters are displayed in the following figure.

Connecting a HART Output Device

Figure 338: Attaching HART 2-Wire Output Device

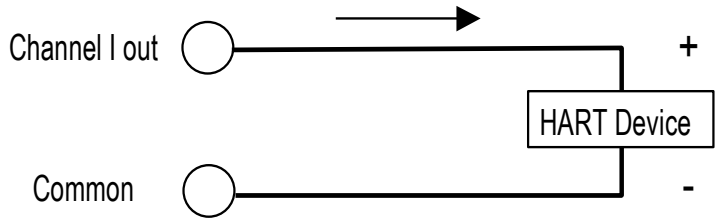

Connecting a HART Input Transmitter to an Output Channel

In this type of application, the HART output module, IC695ALG728, cannot read the analog current level from the HART device. However, Module can communicate with the HART signal. There is no analog input to Module.

Figure 339: HART Input Transmitter attached to Analog Output Channel

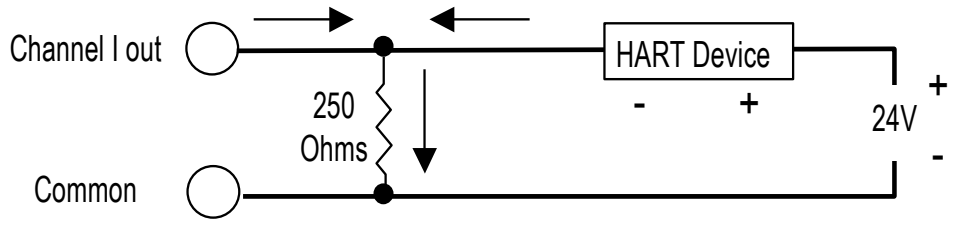

11.5 HART Reference Data

If *HART Data Scan Control* is configured as “Dynamic Data Only” or “All Data”, the CPU automatically scans the HART data listed on the next page into the *HART Data Reference Addres*s configured for this module. The data length depends on whether All Data or Dynamic Data is selected.

This data includes response data associated with several HART Pass-Through Commands. Module stores this data, and then passes it to the CPU either in the automatic HART data scan described above, or in response to function blocks in the application program.

Note that invalid or uninitialized REAL (floating-point) data will be set to NaN (Not-A-Number).

11.5.1 HART Status Data

In addition to the HART Reference Data, Module reports the status of HART communications in its configured HART Status Reference Address. The length of this data is 4 words / 64 bits:

Hart Status Data	Definition
Word 1	Device Present, one bit per channel. Channel 1 in lowest bit. For 8-channel module, bits 9-16 are not used.
Word 2	Device Initializing, one bit per channel. Channel 1 in lowest bit. For 8-channel module, bits 9-16 are not used.
Words 3 and 4	Not used

11.5.2 HART Data Format

		Byte Offset		Field Description	Type
		Begin	**End**		
All HART Data	Dynamic HART Data Only	0x0000	0x0003	HART Primary Variable, CMD#3, Bytes 5-8	REAL
		0x0004	0x0007	HART Secondary Variable CMD#3, Bytes 10-13	REAL
		0x0008	0x000b	HART Tertiary Variable CMD#3, Bytes 15-18	REAL
		0x000c	0x000f	HART Fourth Variable CMD#3, Bytes 20-23	REAL
		0x0010	0x0013	Slot 0 value. CMD#33, Bytes 2-5	REAL
		0x0014	0x0017	Slot 1 value CMD#33, Bytes 8-11	REAL
		0x0018	0x001b	Slot 2 value CMD#33, Bytes 14-17	REAL
		0x001c	0x001f	Slot 3 value CMD#33, Bytes 20-23	REAL
		0x0020		HART communication status byte from the last HART command response.	BYTE
		0x0021		HART device status byte from the last HART command response.	BYTE
		0x0022		Spare for alignment.	BYTE*2
		0x0024		HART device Manufacturer ID. CMD#0, Byte 1	BYTE
		0x0025		HART device type code. CMD#0, Byte 2	BYTE
		0x0026		Minimum number of preambles device requires. CMD#0, Byte 3	BYTE
		0x0027		HART Universal command code. CMD#0, Byte 4	BYTE
		0x0028		HART Transmitter specific revision. CMD#0, Byte 5	BYTE
		0x0029		HART device software revision number. CMD#0, Byte 6	BYTE
		0x002A		HART device hardware revision number. CMD#0, Byte 7	BYTE
		0x002B		HART flags. CMD#0, Byte 8	BYTE
		0x002C	0x002F	HART device ID number. CMD#0, Byte 9-11	BYTE*4
		0x0030	0x0037	8-character device tag. CMD#13, Bytes 0-5 in unpacked ASCII.	BYTE*8
		0x0038	0x0047	Device Descriptor. CMD#13, Bytes 6-17 in unpacked ASCII	BYTE*16
		0x0048		HART Primary Variable Units. CMD#3, Byte 4	BYTE
		0x0049		HART Secondary Variable Units. CMD#3, Byte 9, 0 if not present.	BYTE
		0x004a		HART Tertiary Variable Units. CMD#3, Byte 14, 0 if not present.	BYTE
		0x004b		HART Fourth Variable Units. CMD#3, Byte 19, 0 if not present.	BYTE
		0x004c		HART Primary Variable Code. CMD#50, Byte 0	BYTE
		0x004d		HART Secondary Variable Code. CMD#50, Byte 1	BYTE
		0x004e		HART Tertiary Variable Code. CMD#50, Byte 2	BYTE
		0x004f		HART Fourth Variable Code. CMD#50, Byte 3	BYTE
		0x0050		Units code for range parameter. CMD#15, Byte 2	BYTE
		0x0051	0x0053	Spare for alignment	BYTE*3
		0x0054	0x0057	Low transmitter range for analog signal in eng. units. CMD#15, Bytes 3-6	REAL
		0x0058	0x005b	High transmitter range for analog signal in eng. units. CMD#15, Bytes 7-10	REAL
		0x005c		Slot 0 units code. CMD#33, Byte 1	BYTE
		0x005d		Slot 1 units code. CMD#33, Byte 7	BYTE
		0x005e		Slot 2 units code. CMD#33, Byte 13	BYTE
		0x005f		Slot 3 units code. CMD#33, Byte 19	BYTE
		0x0060		Slot 0 variable code. CMD#33, Byte 0	BYTE
		0x0061		Slot 1 variable code. CMD#33, Byte 6	BYTE
		0x0062		Slot 2 variable code. CMD#33, Byte 12	BYTE
		0x0063		Slot 3 variable code. CMD#33, Byte 18	BYTE
		0x0064	0x0083	32-character message. CMD#12, Bytes 0-23 unpacked ASCII.	BYTE*32
		0x0084	0x0087	Stored date in the field device. CMD#13, Bytes 18-20.	BYTE*4
		0x0088	0x008b	The final assembly number is used for identifying the material and electronics that comprise the field device. CMD#16, Bytes 0-2	BYTE*4
		0x008c	0x00a4	The extended status returned by HART command 48.	BYTE*25
		0x00a5	0x00af	Spare	BYTE*11

11.6 COMMREQs for HART Modules

Three Communication Request (COMMREQ) functions can be used in the application program to communicate with RX3i HART modules.

COMMREQ 1, Get HART Device Information, reads (local rack)

- The TaskID must be set to 1.

Remote Get HART Device Information, reads (remote rack)

- The TaskID must be set to:
  - Rack mounted PNC, Hex 85 or decimal 133
  - Embedded PNC, Hex 20085 or decimal 131205

Note that a UDFB that automates the COMMREQ control logic is available for download from the Emerson support website. (Search Article ID: 000052451). A link is provided at the end of this document.

COMMREQ 2, Send HART Pass-Through Command

- The TaskID must be set to 1.

11.6.1 Get HART Device Information, COMMREQ 1 Command Block

Word Offset	Value Dec (Hex)	Definition		
Word 1	8 (0008)	Length of command Data Block in words beginning at Word 7.		
Word 2	0 (0000)	Always 0 (no-wait mode request)		
Word 3		Memory type of COMMREQ status word. (Words 3 and 4 specify the starting address where the status word will be written.) It can be:		
		Memory Type	**Memory Type**	**Decimal code**
		%I	Discrete input table (Bit mode)	70
		%Q	Discrete output table (Bit mode)	72
		%I	Discrete input table (Byte mode)	16
		%Q	Discrete output table (Byte mode)	18
		%R	Register memory	8
		%W	Word memory	196
		%AI	Analog input table	10
		%AQ	Analog output table	12
Word 4	0-based offset	COMMREQ status word address minus 1. Example: if Words 3 and 4 contain values of 8 and 9 respectively, the status word will be written to %R10.		
Word 5, 6	0 (0000)	Reserved		
Word 7	1 (0001)	Command code for the COMMREQ to be executed. Get HART Device Information = 1.		
Word 8	1 (0001)	Number of Response Reference areas that follow (does not include COMMREQ status word). Always 1.		
Word 9		Memory type for the reply data. (Words 9—12 specify the starting address where the response will be written.)		
		Memory Type	**Memory Type**	**Decimal code**
		%I	Discrete input table (Byte mode)	16
		%Q	Discrete output table (Byte mode)	18
		%W	Word memory	196
		%R	Register memory	8
		%AI	Analog input table	10
		%AQ	Analog output table	12
		%T	Discrete temporary memory (Byte)	20
		%M	Discrete internal memory (Byte)	22
Word 10	0 (0000)	Bit Offset (must be 0 for all requests).		

Word Offset	Value Dec (Hex)	Definition
Word 11	0-based offset (low word).	Starting address to which the response will be written. The value entered is the 0-based offset from the beginning of PLC memory for the memory type specified in Word 9. This offset is in bytes or words depending on the memory type specified. Valid ranges of values depend on the memory ranges of the host PLC. Example: If Words 9 and 11 contain values of 8 and 250 respectively, the response will be written to %R251.
Word 12	0-based offset (high word)	High word of offset. Value = 0 for most memory types. High word is non-zero only on if %W memory is used.
Word 13	Words: 90 (005A) Bytes: 180 (00B4)	Maximum size of response area. Must be 90 if word memory type is used; 180 if discrete memory type is used.
Word 14	Range 1-16.	Channel Number 1-16 (valid range depends on module channel count and single-ended versus differential mode)

11.6.2 Remote Get HART Device Information, Command Block

Word Offset	Value Dec (Hex)	Definition		
Word 1	11 (000B)	Length of command Data Block in words beginning at Word 7.		
Word 2	0 (0000)	Always 0 (no-wait mode request)		
Word 3		Memory type of COMMREQ status words[71]. (Words 3 and 4 specify the starting address where the status words will be written.) It can be:		
		Memory Type	**Memory Type**	**Decimal code**
		%I	Discrete input table (Bit mode)	70
		%Q	Discrete output table (Bit mode)	72
		%I	Discrete input table (Byte mode)	16
		%Q	Discrete output table (Byte mode)	18
		%R	Register memory	8
		%W	Word memory	196
		%AI	Analog input table	10
		%AQ	Analog output table	12

[71] *The COMMREQ status words consist of two words of memory. The lower 16-bit word provides the COMMREQ Status and the upper 16-bit word provides the Command Status.*

Word Offset	Value Dec (Hex)	Definition
Word 4	0-based offset	COMMREQ status words address minus 1. Example: if Words 3 and 4 contain values of 8 and 9 respectively, the status words will be written to %R10 and %R11.
Word 5, 6	0 (0000)	Reserved
Word 7	1 (0001)	Command code for the COMMREQ to be executed. Get HART Device Information = 1.
Word 8	1 (0001)	Number of Response Reference areas that follow (does not include COMMREQ status word). Always 1.
Word 9		Memory type for the reply data. (Words 9—12 specify the starting address where the response will be written.)

Memory Type	Memory Type	Decimal code
%I	Discrete input table (Byte mode)	16
%Q	Discrete output table (Byte mode)	18
%W	Word memory	196
%R	Register memory	8
%AI	Analog input table	10
%AQ	Analog output table	12
%T	Discrete temporary memory (Byte)	20
%M	Discrete internal memory (Byte)	22

Word 10	0 (0000)	Bit Offset (must be 0 for all requests).
Word 11	0-based offset (low word).	Starting address to which the response will be written. The value entered is the 0-based offset from the beginning of PLC memory for the memory type specified in Word 9. This offset is in bytes or words depending on the memory type specified. Valid ranges of values depend on the memory ranges of the host PLC. Example: If Words 9 and 11 contain values of 8 and 250 respectively, the response will be written to %R251.
Word 12	0-based offset (high word)	High word of offset. Value = 0 for most memory types. High word is non-zero only on if %W memory is used.
Word 13	Words: 90 (005A) Bytes: 180 (00B4)	Maximum size of response area. Must be 90 if word memory type is used; 180 if discrete memory type is used.
Word 14	Range 1-16.	Channel Number 1-16 (valid range depends on module channel count and single-ended versus differential mode)
Word 15	Device ID	ID of Remote PROFINET Scanner.
Word 16	Slot	Remote Rack Slot number of HART capable Analog module.
Word 17	SubSlot	Remote Rack SubSlot number of HART capable Analog module

Command Status Word

The Command status word for the Remote Get HART Device Information command is displayed in the following figure.

Value		Description
Dec	(Hex)	
0	(0000)	No command-specific status available.
1	(0001)	Invalid PROFINET device number.
2	(0002)	Undeclared PROFINET device (invalid name or nonexistent).
3	(0003)	Invalid slot or subslot number.
4	(0004)	Non-specific PROFINET error.
5	(0005)	Invalid channel number.
6	(0006)	Non-specific command error.

Minimum Firmware & GSDML Requirements

The Remote Get HART Device Information COMMREQ requires the following firmware revisions and GSDMLs:

- RX3i CPUs with version 8.95 or later
- IC695PNC001 RX3i PROFINET Controller version 2.26 or later
- IC695PNS001 RX3i PROFINET Scanner version 2.41 or later, or IC695PNS101
- IC695PNS001 RX3i PROFINET Scanner GSDML-V2.3-GEIP-RX3iPNS-20160602.xml

Note that the updated IC695PNS001 RX3i PROFINET Scanner GSDML-V2.3-GEIP-RX3iPNS-20160602.xml is required to enable the HART Pass Through Service Options settings for HART capable analog modules in PME. The settings are:

- Once per Channel Scan
- Once per Two Channel Scans (default)
- Once per Four Channel Scans
- Pass-Thru Only

The first three option settings set the rate at which an analog module that supports HART communications queries a HART device for its Remote Get HART Device Information data. Whereas, the Pass-Thru Only setting configures channel scanning that occurs only when the HART device configuration changes or has not been read for 10 seconds. Note that the Remote Get HART Device Information feature does not work when the “Pass-Thru Only” setting is selected.

11.6.3 COMMREQ Status Word

The COMMREQ status word for the Remote and Local Get HART Device Information command is displayed in the following figure.

Value		Description
Dec	**(Hex)**	
0	(0000)	Device has not yet processed the COMMREQ.
1	(0001)	Command Complete **Note:** This status does not necessarily mean success. Some commands have reply data that must also be checked.
2	(0002)	Command Terminated – module busy
3	(0003)	Command Terminated – invalid command
4	(0004)	Command Terminated – invalid command data
5	(0005)	Command Terminated – not enough data
6	(0006)	Not used
7	(0007)	Command Terminated – not enough memory in reply area The command did not specify sufficient PLC memory for the reply. Command will be ignored.
8	(0008)	Command Terminated – command-specific error. Local COMMREQ: Refer to Additional Code in the Status Block for more information. Remote COMMREQ; Refer to the additional codes in Section 11.6.2, *Command Status* Word for more information. Example: If the first word (lower) contains a value of 8 and the second word (upper) contains a value of 3 then the error is an “Invalid slot or subslot number.”
265	(0109)	Error, Hart device not connected
521	(0209)	Error, Channel not HART-enabled
777	(0309)	Error, Analog Output Module, No field power
1033	(0409)	Error. HART command not allowed
1289	(0509)	Error. Invalid HART command
1545	(0609)	Error. Device did not respond
1801	(0709)	Error, HART data count too large

11.6.4 Remote and Local Get HART Device Information, Reply Data Format

The response to a Remote and Local *Get HART Device Information* COMMREQ is written to the PLC memory location specified in words 9-12 of the COMMREQ.

Byte	Name	Description
1, 2	Command Code	Echo of Command code. (0x0001)
3, 4	Channel Number	Echo of Channel Number
5-8	HART Primary Variable	CMD#3, Bytes 5-8. Type: REAL
9-12	HART Secondary Variable	CMD#3, Bytes 10-13 Type: REAL
13-16	HART Tertiary Variable	CMD#3, Bytes 15-18. Type: REAL
17-20	HART Fourth Variable	CMD#3, Bytes 20-23. Type: REAL
21-24	Slot 0 value	CMD#33, Bytes 2-5. Type: BYTE
25-28	Slot 1 value	CMD#33, Bytes 8-11. Type: BYTE
29-32	Slot 2 value	CMD#33, Bytes 14-17. Type: BYTE
33-36	Slot 3 value	CMD#33, Bytes 20-23. Type: BYTE
37	HART communication status byte from the last HART command response, refer to next page	
38	HART device status byte from the last HART command response, refer to next page.	
39-40	Spare for alignment.	Type: BYTE
41	HART device Manufacturer ID. CMD#0, Byte 1	Type: BYTE
42	HART device type code. CMD#0, Byte 2	Type: BYTE
43	Minimum number of preambles device requires	CMD#0, Byte 3. Type: BYTE
44	HART Universal command code	CMD#0, Byte 4. Type: BYTE
45	HART Transmitter specific revision	CMD#0, Byte 5 Type: BYTE
46	HART device software revision number	CMD#0, Byte 6 Type: BYTE
7	HART device hardware revision number	CMD#0, Byte 7 Type: BYTE
48	HART flags	CMD#0, Byte 8 Type: BYTE
49-52	HART device ID number	CMD#0, Byte 9-11 Type: 4 BYTEs
53-60	8-character device tag.	CMD#13, Type: 8 BYTEs. Bytes 0-5 are unpacked ASCII
61-76	Device Descriptor	CMD#13, TYPE: 16 BYTEs. Bytes 6-17 are unpacked ASCII
77	HART Primary Variable Units	CMD#3, Byte 4. Type: BYTE
78	HART Secondary Variable Units	CMD#3, Byte 9, 0 if not present. Type: BYTE
79	HART Tertiary Variable Units	CMD#3, Byte 14, 0 if not present. Type: BYTE
80	HART Fourth Variable Units	CMD#3, Byte 19, 0 if not present. Type: BYTE

Byte	Name	Description
81	HART Primary Variable Code	CMD#50, Byte 0 Type: BYTE
82	HART Secondary Variable Code	CMD#50, Byte 1 Type: BYTE
83	HART Tertiary Variable Code	CMD#50, Byte 2 Type: BYTE
84	HART Fourth Variable Code	CMD#50, Byte 3 Type: BYTE
85	Units code for range parameter	CMD#15, Byte 2 Type: BYTE
86-88	Spare for alignment	3 BYTEs
89-92	Low transmitter range for analog signal in engineering units	CMD#15, Bytes 3-6 Type: REAL
93-96	High transmitter range for analog signal in engineering units	CMD#15, Bytes 7-10 Type: REAL
97	Slot 0 units code	CMD#33, Byte 1 Type: REAL
98	Slot 1 units code	CMD#33, Byte 7 Type: REAL
99	Slot 2 units code	CMD#33, Byte 13 Type: REAL
100	Slot 3 units code	CMD#33, Byte 19 Type: REAL
101	Slot 0 variable code	CMD#33, Byte 0 Type: REAL
102	Slot 1 variable code	CMD#33, Byte 6 Type: REAL
103	Slot 2 variable code	CMD#33, Byte 12 Type: REAL
104	Slot 3 variable code	CMD#33, Byte 18 Type: REAL
105-136	32-character message	CMD#12, Bytes 0-23 unpacked ASCII. Type: 32 BYTEs
137-140	Stored date in the field device	CMD#13, Bytes 18-20. Type 4 BYTEs
141-144	Number identifying the field device's material and electronics	CMD#16, Bytes 0-2. Type 4 BYTEs
145-169	The extended status returned by HART command 48.	Type: 25 BYTEs
170-180	Spare for alignment	Type: 11 BYTEs

11.6.5 Sending a HART Pass-Through Command to a HART Device

The HART module automatically uses several HART Pass-Through commands as described earlier in this chapter. In addition, the application program can use the Send HART Pass-Through Command (COMMREQ 2) to send HART Pass-Through commands to an RX3i HART module. The HART module stores the data returned by the command in its on-board memory. This data can then be scanned automatically by the CPU or read as needed from the application program.

A list of Pass-Through commands is included in this section. The RX3i HART module then passes the command to the intended HART input or output device. Responses to HART Pass-Through commands are available to the application program in the COMMREQ replies.

The Send HART Pass-Through Command COMMREQ automatically fills in the Start Character, Address, Byte Count, Status, and the checksum. The RX3i HART module waits until the data from the HART device is available before it replies to this command, so the application program does not have to query Module for the response. The application program must check the COMMREQ Status word to determine when the reply data is available. The reply is returned between 750mS and 8 seconds later. The reply time depends on the number of channels enabled, the Pass-Through rate selected, and whether other Pass-Through operations are occurring at the same time.

Only one application program Pass-Through command per channel is allowed at a time. If another request is made on a channel that has a Pass-Through in-progress, Module returns a COMMREQ Status Word = 0x0002 (module busy).

HART Pass-Through Command Block, COMMREQ 2

Word Offset	Value Dec	(Hex)	Definition		
Word 1	10+x	000A + x	Length of command Data Block in words beginning at Word 7		
Word 2	0	0000	Always 0 (no-wait mode request)		
Word 3			Memory type of COMMREQ status word. It can be:		
			Memory Type	**Memory Type**	**Decimal code**
			%I	Discrete input table (Bit mode)	70
			%Q	Discrete output table (Bit mode)	72
			%I	Discrete input table (Byte mode)	16
			%Q	Discrete output table (Byte mode)	18
			%R	Register memory	8
			%W	Word memory	196
			%AI	Analog input table	10
			%AQ	Analog output table	12
Word 4	0-based offset		COMMREQ status word address minus 1 Example: if Words 3 and 4 contain values of 8 and 9 respectively, the status word will be written to %R10.		
Word 5	0	0000	Reserved		
Word 6	0	0000	Reserved		
Word 7	2	0002	Command code for the COMMREQ to be executed. HART Pass-Through Command = 2		
Word 8	1	0001	Number of Response Reference areas that follow (does not include COMMREQ status word). Always 1		
Word 9			Memory type for the reply data. (Words 9—12 specify the starting address where the response will be written).		
			Memory Type	**Memory Type**	**Decimal code**
			%I	Discrete input table (Byte mode)	16
			%Q	Discrete output table (Byte mode)	18
			%W	Word memory	196
			%R	Register memory	8
			%AI	Analog input table	10
			%AQ	Analog output table	12
			%T	Discrete temporary memory (Byte)	20
			%M	Discrete internal memory (Byte)	22
Word 10	0	0000	Bit Offset (must be 0 for all requests)		

Word Offset	Value Dec (Hex)	Definition
Word 11	0-based offset (low word)	Starting address to which the response will be written. The value entered is the 0-based offset from the beginning of PLC memory for the memory type specified in Word 9. This offset will be in bytes or words depending on the memory type specified. Valid ranges of values depend on the memory ranges of the host PLC. Example: If Words 9 and 11 contain values of 8 and 250 respectively, the response will be written to %R251.
Word 12	0-based offset (high word)	High word of offset. Value = 0 for most memory types. Would only have a non-zero value if %W memory is used
Word 13	Response data size	Maximum size of response area. Size in bytes if discrete memory type used for response. Size in words if word type used
Word 14	Channel Number (1-16).	Channel Number 1-16 (valid range depends on module channel count and single-ended versus differential mode)
Word 15	HART command (0x0 – 0xff)	HART Pass-Through Command type. HART Pass-Through Commands that can be sent to an RX3i HART module are listed in this section.
Word 16	Command Data byte count	Size (in bytes) of command data that follows
…	…	…
Word 16+x	…	HART Command Data. Request data must be byte-packed and in big-endian format, PLC CPU format is little-endian, so some commands may require swapping of fields from little-endian to big-endian format as described in this chapter. This is usually needed for floating-point data.

HART Pass-Through Reply Data Format

The RX3i HART module returns the response data below to the CPU memory location specified by words 9-12 of the COMMREQ. Data beginning at Word 7 of the reply is byte-packed and in big-endian format. PLC CPU format is little-endian, so some commands may require swapping of fields from big-endian to little-endian format as described in this chapter. This is usually needed for floating-point data.

Word	Name	Description
1	Command Code	Echo of Command code (0x0002)
2	Channel Number	Echo of Channel Number (same as request)
3	HART command	Echo of HART Pass-Through Command type. Refer to the tables in this section.
4	HART Status	Low byte is HART Comm Status and high byte is HART Dev Status from HART device response.
5	Spare	Spare for future use. User logic should not check this value because future module revisions may make this non-zero.
6	Response Byte Count (x)	Size in bytes of the response data that follows.
7L	Data Low	First response data byte from device.
7H	Data High	Second response data byte from device.
…	…	…
7+(x-1)/2 L	Data Low	….
7+(x-1)/2 H	Data High	Last response data byte from device.

COMMREQ Status Word

The following table defines the values that can be returned in the COMMREQ status word.

Value		Description
Dec	(Hex)	
0	(0000)	Device has not yet processed the COMMREQ.
1	(0001)	Command Complete. This status does not necessarily mean success. Some commands have reply data that must also be checked.
2	(0002)	Command Terminated – module busy
3	(0003)	Command Terminated – invalid command
4	(0004)	Command Terminated – invalid command data
5	(0005)	Command Terminated – not enough data
6	(0006)	Not used
7	(0007)	Command Terminated – not enough memory in reply area. The command did not specify sufficient PLC memory for the reply. Command will be ignored.
8	(0008)	Command Terminated – command-specific error. Refer to the additional codes in in the Status Block for more information.
265	(0109)	Error, Hart device not connected
521	(0209)	Error, Channel not HART-enabled
777	(0309)	Error, Analog Output Module, No field power
1033	(0409)	Error. HART command not allowed
1289	(0509)	Error. Invalid HART command

This status information relates to the execution of the COMMREQ function, not to the status of the HART communications. HART communications status is provided in the response data, as shown previously in this section.

11.6.6 HART Pass-Through Commands and Command Codes for RX3i Modules

Within a HART command, data can be represented as integers, floating-point numbers, ASCII text strings, or enumerated item lists. Unmarked data types are 8-, 16, or 24-bit integers (including code values)

Universal Commands		Data in Command			Data in Reply		
#	Function	Byte	Data	Type	Byte	Data	Type
0	Read unique identifier	None			0	"254" (expansion)	
					1	Manufacturer identification code	
					2	Manufacturer device type code	
					3	Number of preambles required	
					4	Universal command revision	
					5	Device-specific command revision	
					6	Software revision	
					7	Hardware revision	Integer
					8	Device function flags: bit 0 = multisensor device, bit 1 = protocol bridge device	Bit
					9-11	Device ID number	
1	Read primary variable	None			0	PV units code	
					1-4	Primary variable (PV)	Floating pt.
2	Read current and percent of range	None			0-3	Current (mA)	Floating pt.
3	Read current and four predefined dynamic variables	None			0-3	Current (mA)	Floating pt.
					4	PV units code	
					5-8	Primary variable (PV)	Floating pt.
					9	SV units code	
					10-13	Secondary variable (SV)	Floating pt.
					14	TV units code	
					15-18	Third variable (VT)	Floating pt.
					19	FV units code	
					20-23	Fourth variable (FV)	Floating pt.
6	Write polling address	0	Polling address		same as command		

Universal Commands		Data in Command			Data in Reply		
#	**Function**	**Byte**	**Data**	**Type**	**Byte**	**Data**	**Type**
11	Read unique identifier associated with tag	0-5	Tag	ASCII	0-11	Same as command #0, refer to above	
12	Read message	None			0-23	Message (32 characters)	ASCII
13	Read tag, descriptor, date	None			0-5	Tag (8 characters)	ASCII
					6-17	Descriptor (16 characters)	ASCII
					18-20	Date	Date
14	Read Primary Variable sensor information	None			0-2	Sensor serial number	
					3	Units code for sensor limits and min. span	
					4-7	Upper sensor limit	Floating pt.
					8-11	Lower sensor limit	Floating pt.
					12-15	Minimum span	Floating pt.
15	Read output information	None			0	Alarm select code	
					1	Transfer function code	
					2	PV/range units code	
					3-6	Upper range value	Floating pt.
					7-10	Lower range value	Floating pt.
					11-14	Damping value (seconds)	Floating pt.
					15	Write-protect code	
					16	Private-label distributor code	
16	Read final assembly number	None			0-2	Final assembly number	
17	Write message	0-23	Message (32 characters)	ASCII	Same as command		
18	Write tag, descriptor, date	0-5	Tag (8 characters)	ASCII	Same as command		
		6-17	Descriptor (16 characters)	ASCII			
		18-20	Date	Date			
19	Write final assembly number	0-2	Final assembly number		Same as command		

Among the common-practice commands listed below, commands #60 and #62 through #70 are used to configure and control the multiple outputs generated by some multivariable transmitters. Such multiple outputs are numbered 1 to 4, corresponding to the HART dynamic

variables: PV (primary variable), SV (secondary variable), TV (third variable) and FV (fourth variable).

Common-Practice Commands		**Data in Command**			**Data in Reply**		
#	**Function**	**Byte**	**Data**	**Type**	**Byte**	**Data**	**Type**
33	Read transmitter variables	0	Transmitted variable code for slot 0		0	Transmitted variable code for slot 0	
		1	Transmitted variable code for slot 1		1	Units code for slot 0	
		2	Transmitted variable code for slot 2		2-5	Variable for slot 0	Floating point
		3	Transmitted variable code for slot 3		6	Transmitted variable code for slot 1	
		Truncated after last requested code			7	Units code for slot 1	
					8-11	Variable for slot 1	Floating point
					12	Transmitted variable code for slot 2	
					13	Units code for slot 2	
					14-17	Variable for slot 2	Floating point
					18	Transmitted variable code for slot 3	
					19	Units code for slot 3	
					20-23	Variable for slot 3	Floating point
					Truncated after last requested variable		
34	Write damping value	0-3	Damping value (seconds)	Floating point	Same as command		
35	Write range values	0	Range units code		Same as command		
		1-4	Upper range value	Floating point			
		5-8	Lower range value	Floating point			
36	Set upper range value (= push SPAN button)	None			none		
37	Set lower range value (= push ZERO button)	None			none		
38	Reset Configuration Changed flag	None			none		

Common-Practice Commands		Data in Command			Data in Reply		
#	**Function**	**Byte**	**Data**	**Type**	**Byte**	**Data**	**Type**
39	EEPROM control	0	EEPROM control code: (0 = write to EEPROM 1 = read EEPROM to RAM)		Same as command		
40	Enter/exit fixed current mode	0-3	Current (mA) (0 = fixed current mode)	Floating point	Same as command		
41	Perform device self-test	None			none		
42	Perform master reset	None			none		
43	Set (trim) PV zero	None			none		
44	Write PV units	0	PV units code		Same as command		
45	Trim DAC zero	0-3	Measured current (mA)	Floating point	Same as command		
46	Trim DAC gain	0-3	Measured current (mA)	Floating point	Same as command		
47	Write transfer function	0	Transfer function code		Same as command		
48	Read additional device status	None			0-5	Device-specific status	Bit
					6-7	Operational modes (1-5)	
					8-10	Analog outputs saturated[72]	Bit
					11-13	Analog outputs fixed[72]	Bit
					14-24	Device-specific status	Bit
49	Write PV sensor serial number	0-2	Sensor serial number		Same as command		
50	Read dynamic variable assignments	None			0	PV transmitter variable code	
					1	SV transmitter variable code	
					2	TV transmitter variable code	
					3	FV transmitter variable code	
51		0	PV transmitter variable code		Same as command		

[72] *24 bytes each: LSB...MSB refers to analog outputs 1 to 24. Response is truncated after last byte implemented.*

Common-Practice Commands		Data in Command			Data in Reply		
#	**Function**	**Byte**	**Data**	**Type**	**Byte**	**Data**	**Type**
	Read dynamic variable assignments	1	SV transmitter variable code				
		2	TV transmitter variable code				
		3	FV transmitter variable code				
52	Set transmitter variable zero	0	Transmitter variable code		Same as command		
53	Write transmitter variable units	0	transmitter variable code		Same as command		
		1	transmitter variable units code				
54	Read transmitter variable information	0	Transmitter variable code		0	Transmitter variable code	
					1-3	Transmitter variable sensor serial number	
					4	Transmitter variable limits units code	
					5-8	Transmitter variable upper limit	Floating point
					9-12	Transmitter variable lower limit	Floating point
					13-16	Transmitter variable damping value (sec.)	Floating point
					17-20	Transmitter variable minimum span	Floating point
55	Write transmitter variable damping value	0	transmitter variable code		Same as command		
		1-4	transmitter variable damping value (seconds)	Floating point			
56	Write transmitter variable sensor serial number	0	transmitter variable code		Same as command		
		1-3	transmitter variable sensor serial number	Floating point			
57	Read unit tag, descriptor, date	None			0-5	Unit tag (8 characters)	ASCII
					6-17	Unit descriptor (16 characters)	ASCII

Common-Practice Commands		Data in Command			Data in Reply		
#	**Function**	**Byte**	**Data**	**Type**	**Byte**	**Data**	**Type**
					18-20	Unit date (3 bytes: day, month, year)	Date
58	Write unit tag, descriptor, date	0-5	Unit tag (8 characters)	ASCII	Same as command		
		6-17	Unit descriptor (16 characters)	ASCII			
		18-20	Unit date (3 bytes: day, month, year)	Date			
59	Write number of response preambles	0	Number of response preambles		Same as command		
60	Read analog output and percent of range	0	analog output number code		0	Analog output number code	
					1	Analog output units code	
					2-5	Analog output level	Floating point
					6-9	Analog output percent of range	Floating point
61	Read dynamic variables and Primary Variable analog output	None			0	PV analog output units code	
					1-4	PV analog output level	Floating point
					5	PV units code	
					6-9	Primary variable (PV)	Floating point
					10	SV analog output units code	
					11-14	Secondary variable	Floating point
					15	TV analog output units code	
					16-19	Third variable	Floating point
					20	FV analog output units code	
					21-24	Fourth variable	Floating point
					Truncated after last supported variable		
62	Read analog outputs (5.1)	0	Analog output number code for slot 0		0	Slot 0 analog output number code	
		1	Analog output number code for slot 1		1	Slot 0 units code	
		2	Analog output number code for slot 2		2-5	Slot 0 level	Floating point
		3	Analog output number code for slot 3		6	Slot 1 analog output number code	

Common-Practice Commands		Data in Command			Data in Reply		
#	Function	Byte	Data	Type	Byte	Data	Type
		Truncated after last requested level			7	Slot 1 units code	
					8-11	Slot 1 level	Floating point
					12	Slot 2 analog output number code	
					13	Slot 2 units code	
					14-17	Slot 2 level	Floating point
					18	Slot 3 analog output number code	
					19	Slot 3 units code	
					20-23	Slot 3 level	Floating point
					Truncated after last requested level		
63	Read analog output information	0	Analog output number code		0	Analog output number code	
					1	Analog output alarm select code	
					2	Analog output transfer function code	
					3	Analog output range units code	
					4-7	Analog output upper range value	Floating point
					8-11	Analog output lower range value	Floating point
					12-15	Analog output additional damping value (seconds)	Floating point
64	Write analog output additional damping value	0	Analog output number code		Same as command		
		1-4	Analog output additional damping value	Floating point			
65	Write analog output range values	0	Analog output number code		Same as command		
		1	Analog output units code				
		2-5	Analog output upper range value	Floating point			
		6-9	Analog output lower range value	Floating point			
66		0	Analog output number code		Same as command		

Common-Practice Commands		Data in Command			Data in Reply		
#	**Function**	**Byte**	**Data**	**Type**	**Byte**	**Data**	**Type**
	Enter/exit fixed analog output mode	1	Analog output units code				
		2-5	Analog output level[73]	Floating point			
67	Trim analog output zero	0	Analog output number code		Same as command		
		1	Analog output units code				
		2-5	Externally-measured analog output level[73]	Floating point			
68	Trim analog output gain	0	Analog output number code		Same as command		
		1	Analog output units code				
		2-5	Externally-measured analog output level[73]	Floating point			
69	Write analog output transfer function	0	Analog output number code		Same as command		
		1	Analog output transfer function code				
70	Read analog output endpoint values	0	Analog output number code		0	Analog output number code	
					1	Analog output endpoint units code	
					2-5	Analog output upper endpoint value	Floating point
					6-9	Analog output lower endpoint value	Floating point
107	Write burst mode transmitter variable (for command 33)	0	Transmitter variable code for slot 0		Same as command		
		1	Transmitter variable code for slot 1				
		2	Transmitter variable code for slot 2				
		3	Transmitter variable code for slot 3				

[73] *"not a number" exits fixed output mode*

Common-Practice Commands		Data in Command			Data in Reply		
#	**Function**	**Byte**	**Data**	**Type**	**Byte**	**Data**	**Type**
108	Write burst mode command number	0	Burst mode command number		Same as command		
109	Burst mode control	0	Burst mode control code (0 = exit, 1 = enter)		Same as command		
110	Read all dynamic variables	none			0	Primary Variable units code	
					1-4	Primary Variable value	Floating point
					5	Second Variable units code	
					6-9	Second Variable value	Floating point
					10	Third Variable units code	
					11-14	Third Variable value	Floating point
					15	Fourth Variable units code	
					16-19	Fourth Variable value	Floating point

11.6.8 HART Communications Status

Each message from a field slave device includes two bytes of status information, which is also referred to as the “response code”. The format of the HART communications status data is shown in this section.

Response Data with Command Response = 1

If the Most Significant Bit of the first byte is 1 (Communications Error), an error has occurred in the outgoing HART communication. The rest of the bits individually indicate one or more error conditions:

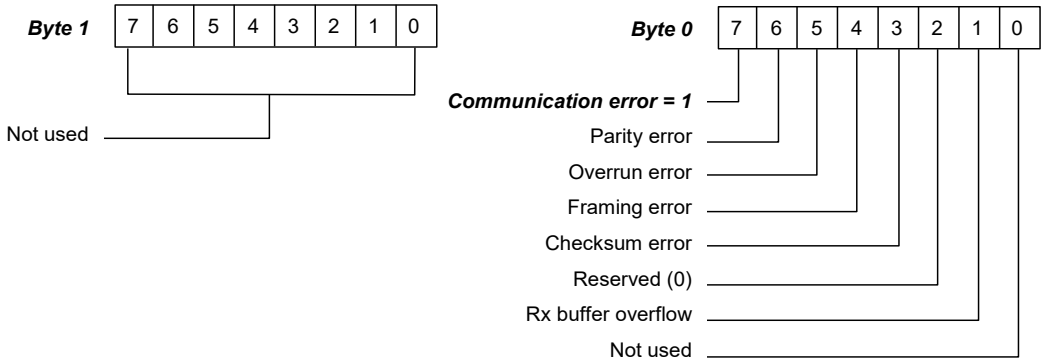

Error conditions include parity and overrun errors. In addition, a field device will report an overflow of its receive buffer. It will also report any discrepancy between the message content and the received checksum.

Response Data with Command Response = 0

If the Most Significant Bit of the first byte is 0 (Command Response), the outgoing HART communications completed normally. The first byte then contains an integer value (the Command Response code) with the command status. The second byte contains the field device status, indicating the operational state of the slave device:

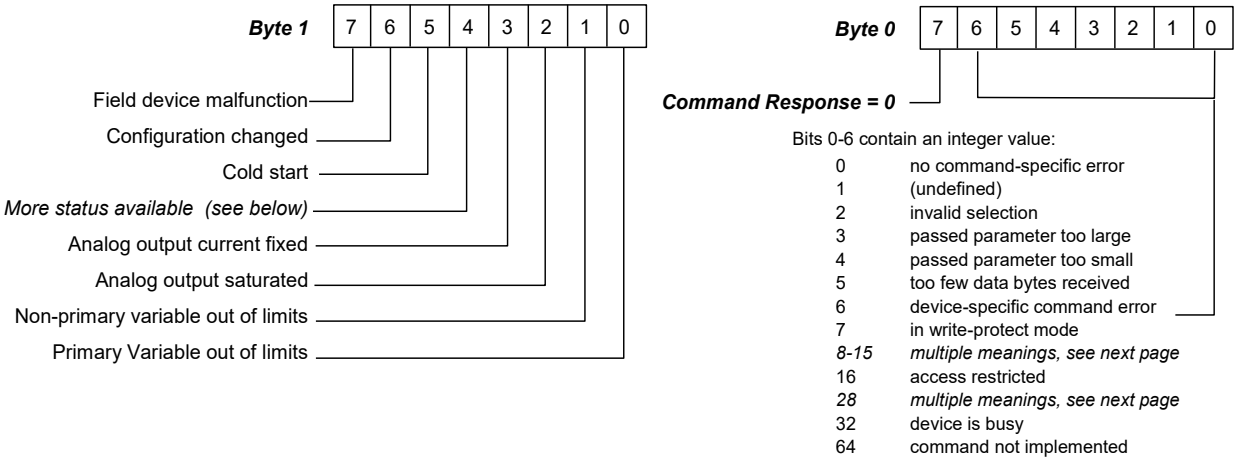

Field Device Status Codes

The Field Device Status codes in the second byte are explained below.

Field Device Status Code	Meaning
Field device malfunction	Measurements may not be correct.
Configuration changed	The configuration has been changed, so the master should check the configuration, and clear the bit by sending Command #38.
Cold start	Set for the first transaction when a field device is powered up.
More status available	The master should issue Command #48 to read more status information.
Analog output fixed	The output has been set to a fixed value for testing. This bit applies only to analog output #1. In a multi-drop output device, command #48 may return similar status information for the other outputs.
Analog output saturated	Analog output #1 is out of range.
Primary variable out of limits	The primary measurement is outside the sensor operating limits. The analog signal and the digital signal read by HART commands may be incorrect.
Non-primary variable out of limits	A non-primary measurement is outside the sensor operating limits. The analog signal and the digital signal read by HART commands may be incorrect. Command #48 may provide more information.

Command Codes with Multiple Meanings

The interpretation of Command Codes 8-15 and 28 in the first Command Response byte depends on the command that was issued.

Code in First Byte	For these Commands	Meaning of the Code
8 (warning)	1, 2, 3, 33, 60, 62, 110	Update failure
	34, 55, 64	Set to nearest possible value
	48	Update in progress
9 (error)	35, 65	Lower range value too high
	36, 37, 43, 52	Applied process too high
	45, 46, 67, 68	Not in proper current mode (fixed at 4 or 20mA)
10 (error)	6	Multi-drop not supported
	35, 65	Lower range value too low
	36, 37, 43, 52	Applied process too low
11 (error)	35, 65	Upper range value too high
	40, 45, 46, 66, 67, 68	In multi-drop mode
	53	Invalid transmitter variable code
12 (error)	35, 65	Upper range value too high
	53, 66, 67, 68	Invalid units code
13 (error)	35, 65	Both range values out of limits
	69	Invalid transfer function code
14 (warning)	35, 36, 65	Span too small
	37	Pushed upper range value over limit
15 (error)	65, 66, 67, 68, 69	Invalid analog output number code
28 (error)	65	Invalid range units code

11.7 Function Blocks to Read HART Data

PAC Machine Edition release 5.5 includes two custom HART function blocks for use in ladder logic application programs. These function blocks can be used to assign variable names to HART data inputs or on HART Get Device Information response data, beginning at word 3.

- DYN_HART_STRUCT interprets the first 36 bytes of the HART data map for a channel. This function block reads on demand the same data that would be automatically scanned if Module were configured for *HART Data Scan Control* set to “Dynamic Data”.
- ALL_HART_STRUCT interprets the entire HART data for a channel, including the data interpreted by the DYN_HART_STRUCT function block. This function block reads on demand the same data that would be automatically scanned if Module were configured for *HART Data Scan Control* set to “All Data”.

Instead of being read into an assigned CPU reference address, the data read by these Function Blocks is placed into a reference address that is defined by the Function Block.

The HART function blocks are located in the Toolchest under the folder "HART Utilities". To create an instance of one of these function blocks, drag and drop the desired function from the Toolchest folder into LD logic.

11.7.1 DYN_HART_STRUCT

The DYN_HART_STRUCT function block interprets the first 36 bytes on the data (offsets 0x0000 to 0x0023) of the HART data map for a channel. Refer to the example in this section. Use of this function block is not required. It only provides a mechanism to assign variable names to the HART data,

When the DYN_HART_STRUCT function executes (receives power flow), each of the HART variables in reference memory is assigned to DYN_HART_STRUCT instance variables. The instance variable names closely match the names listed in the table. They can be used as input to other functions, or for debugging purposes. The entire instance can be added to a Data Watch window so that HART data is easily viewed.

The instance data variables are only updated when the function block receives power flow. An instance of the function block is needed for each HART channel on which automatic assignment is desired.

Parameter types:

IN - Type = WORD, Length = 18, Pass-by = Reference

Data Obtained with the DYN_HART_STRUCT Function Block

Byte Offset		Field Description	Data Type
Begin	End		
0x0000	0x0003	HART Primary Variable, CMD#3, Bytes 5-8	REAL
0x0004	0x0007	HART Secondary Variable CMD#3, Bytes 10-13	REAL
0x0008	0x000b	HART Tertiary Variable CMD#3, Bytes 15-18	REAL
0x000c	0x000f	HART Fourth Variable CMD#3, Bytes 20-23	REAL
0x0010	0x0013	Slot 0 value. CMD#33, Bytes 2-5	REAL
0x0014	0x0017	Slot 1 value CMD#33, Bytes 8-11	REAL
0x0018	0x001b	Slot 2 value CMD#33, Bytes 14-17	REAL
0x001c	0x001f	Slot 3 value CMD#33, Bytes 20-23	REAL
0x0020		HART communication status byte from the last HART command response. Refer to Section 11.6.7.	BYTE
0x0021		HART device status byte from the last HART command response. (Dynamic Data)	BYTE
0x0022		Spare for alignment. (Dynamic Data)	BYTE*2

11.7.2 ALL_HART_STRUCT

The ALL_HART_STRUCT function block interprets the entire HART data map for a channel. This is the same data obtained by the DYN_HART_STRUCT block, plus the additional data displayed in the following figure.

Parameter types:

IN - Type = WORD, Length = 88, Pass-by = Reference

Additional Data Obtained with the ALL_HART_STRUCT Function Block

Byte Offset		Field Description	Data Type
Begin	End		
0x0024		HART device Manufacturer ID. CMD#0, Byte 1	BYTE
0x0025		HART device type code. CMD#0, Byte 2	BYTE
0x0026		Minimum number of preambles device requires. CMD#0, Byte 3	BYTE
0x0027		HART Universal command code. CMD#0, Byte 4	BYTE

Byte Offset		Field Description	Data Type
Begin	End		
0x0028		HART Transmitter specific revision. CMD#0, Byte 5	BYTE
0x0029		HART device software revision number. CMD#0, Byte 6	BYTE
0x002A		HART device hardware revision number. CMD#0, Byte 7	BYTE
0x002B		HART flags. CMD#0, Byte 8	BYTE
0x002C	0x002F	HART device ID number. CMD#0, Byte 9-11	BYTE*4
0x0030	0x0037	8-character device tag. CMD#13, Bytes 0-5 in unpacked ASCII.	BYTE*8
0x0038	0x0047	Device Descriptor. CMD#13, Bytes 6-17 in unpacked ASCII	BYTE*16
0x0048		HART Primary Variable Units. CMD#3, Byte 4	BYTE
0x0049		HART Secondary Variable Units. CMD#3, Byte 9, 0 if not present.	BYTE
0x004a		HART Tertiary Variable Units. CMD#3, Byte 14, 0 if not present.	BYTE
0x004b		HART Fourth Variable Units. CMD#3, Byte 19, 0 if not present.	BYTE
0x004c		HART Primary Variable Code. CMD#50, Byte 0	BYTE
0x004d		HART Secondary Variable Code. CMD#50, Byte 1	BYTE
0x004e		HART Tertiary Variable Code. CMD#50, Byte 2	BYTE
0x004f		HART Fourth Variable Code. CMD#50, Byte 3	BYTE
0x0050		Units code for range parameter. CMD#15, Byte 2	BYTE
0x0051	0x0053	Spare for alignment	BYTE*3
0x0054	0x0057	Low transmitter range for analog signal in engineering units. CMD#15, Bytes 3-6	REAL
0x0058	0x005b	High transmitter range for analog signal in engineering units. CMD#15, Bytes 7-10	REAL
0x005c		Slot 0 units code. CMD#33, Byte 1	BYTE
0x005d		Slot 1 units code. CMD#33, Byte 7	BYTE
0x005e		Slot 2 units code. CMD#33, Byte 13	BYTE
0x005f		Slot 3 units code. CMD#33, Byte 19	BYTE
0x0060		Slot 0 variable code. CMD#33, Byte 0	BYTE
0x0061		Slot 1 variable code. CMD#33, Byte 6	BYTE
0x0062		Slot 2 variable code. CMD#33, Byte 12	BYTE
0x0063		Slot 3 variable code. CMD#33, Byte 18	BYTE
0x0064	0x0083	32-character message. CMD#12, Bytes 0-23 unpacked ASCII.	BYTE*32
0x0084	0x0087	Stored date in the field device. CMD#13, Bytes 18-20.	BYTE*4
0x0088	0x008b	The final assembly number is used for identifying the material and electronics that comprise the field device. CMD#16, Bytes 0-2	BYTE*4
0x008c	0x00a4	The extended status returned by HART Command 48.	BYTE*25
0x00a5	0x00af	Spare	BYTE*11

Example: ALL_HART_STRUCT and DYN_HART_STRUCT

This example uses the following HART module hardware configuration parameters:

- HART Data Scan Control is set to: All Data
- HART Data Reference Address is configured as: %AI1001

The example shows ALL_HART_STRUCT for channels 1 and 2 on a HART module, and DYN_HART_STRUCT for channels 3 and 4 on the same module. The math function blocks in the example show how the structure instance variables can be used on the HART data.

When using either ALL_HART_STRUCT or DYN_HART_STRUCT, the instance data should be made global. This is done by adding ",g" to the end of the instance name when it is created (for example, "ch1,g" creates a global instance named "ch1"). If the instance data is not global, the instance can only be used in the program block where the ALL_HART_STRUCT or DYN_HART_STRUCT function block is executed.

Figure 340: Ladder Logic using ALL_HART_STRUCT & DYN_HART_STRUCT

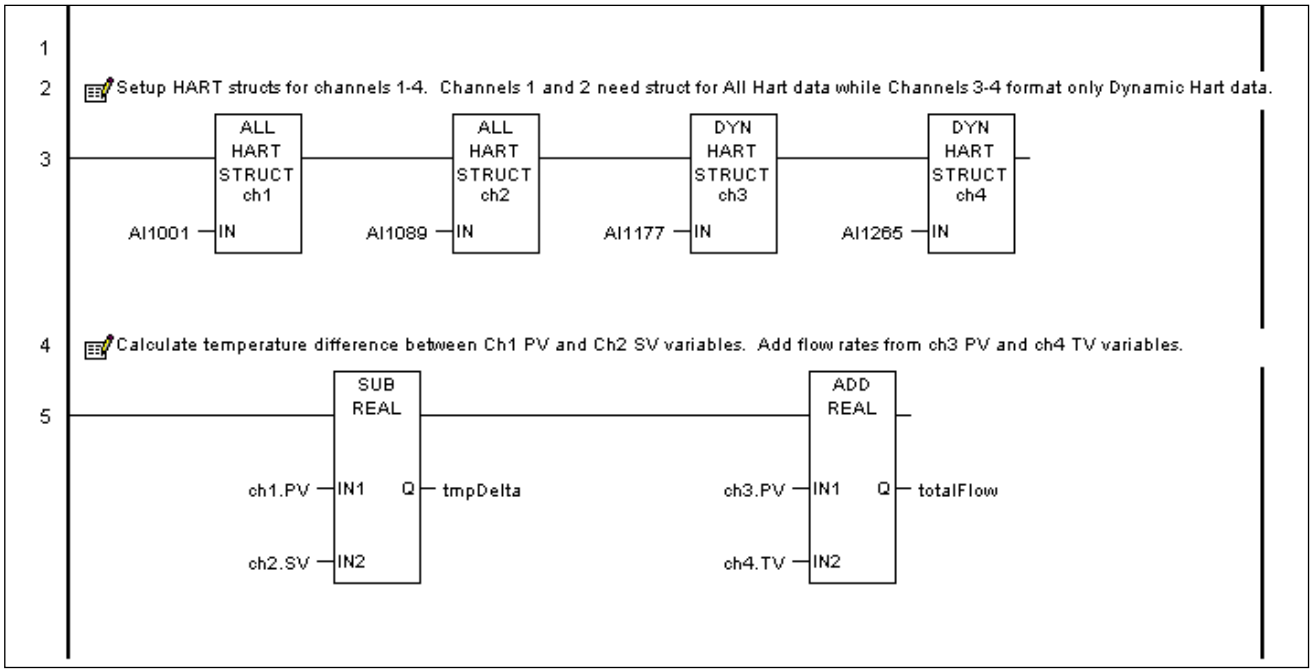

11.8 Converting HART Data to / from RX3i Format

When using HART Pass-Through COMMREQ (command 2) only, HART data must be both byte-packed and in big-endian format as defined by the HART Specification. Because PACSystems CPUs use little-endian format, floating-point values and ASCII data must be reformatted by the program logic.

Note that this conversion is not required when using COMMREQ 1 or for HART data that is automatically scanned.

Two function blocks in the PAC Machine Edition release 5.5 toolchest can be used to pack/unpack HART ASCII data:

- ASCII_PACK prepares ASCII data before sending it to a HART module.
- ASCII_UNPACK can be used to unpack ASCII characters returned by a HART device.

These are described in the next section.

11.8.1 Converting Floating-Point Data (Endian Flip)

Floating-point values that begin at word 17 of a Pass-Through Request must be converted ***to*** big-endian format. Floating-point values that begin at word 7 of the reply must be converted ***from*** big-endian format.

The basic procedure is to pass any HART float values through the SWAP_DWORD (size = 1) and SWAP_WORD (size = 2) functions, as displayed in the following figure. This swaps the words within the float DWord, and swaps the bytes within the two float words. In this example shows how to format floating-point data prior to sending HART command 34, *Write Damping Value*.

Figure 341: Ladder Logic Using Swap DWord & Swap Word

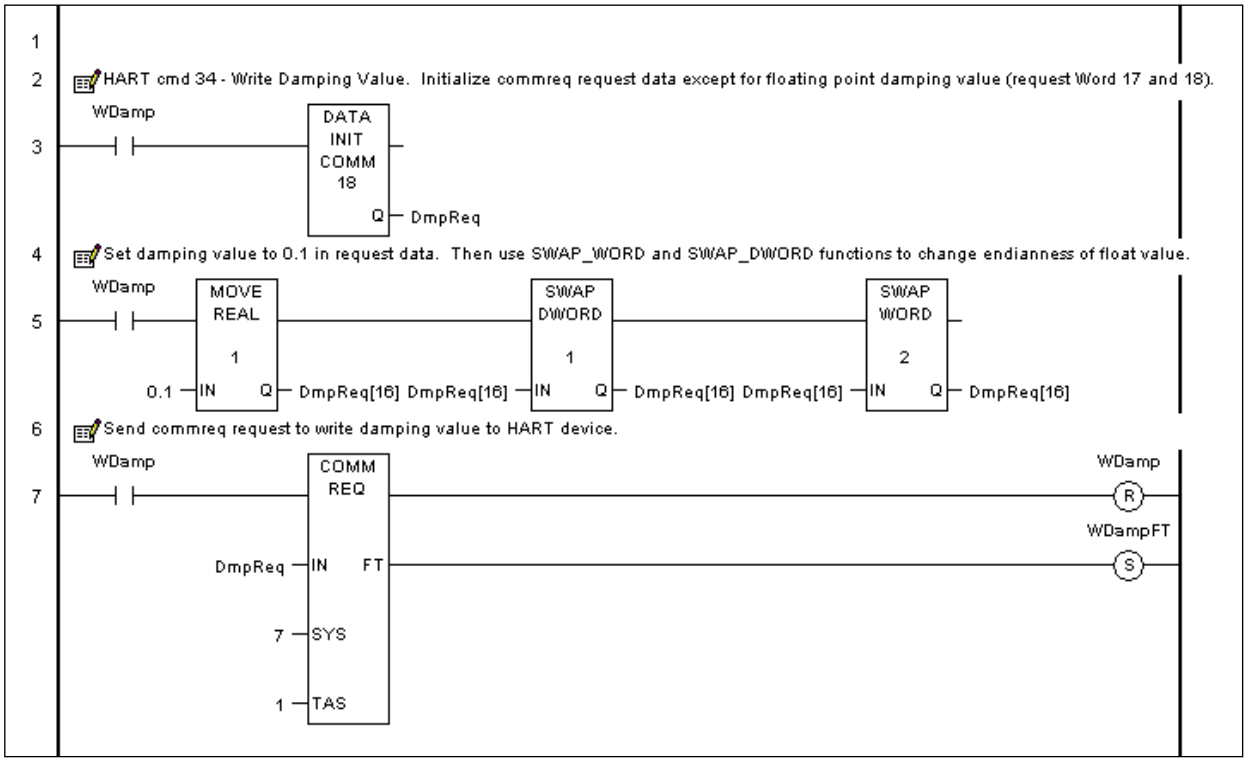

11.8.2 ASCII_PACK

ASCII_PACK prepares ASCII data before sending it to a HART module using COMMREQ2 (HART Pass-Through Request). All of the function block parameters are either Type = WORD, Pass-By = Value or word arrays of Type = WORD and Pass-by = Reference. All word-based reference memory types and symbolics can be used.

It is possible to use data of a different type for the array data (for example, using a byte array of data as input to the ASCII_PACKED and ASCII_UNPACKED blocks), although Machine Edition will issue a warning during verification. In the example mentioned, the size of the input byte array would need to be at least as large as the data size of the function block parameter word array.

Parameter types:

IN - Type = WORD, Length = 16, Pass-by = Reference

NUM - Type = WORD, Length = 1, Pass-by = Value

Q - Type = WORD, Length = 12, Pass-by = Reference

Example Function Block: ASCII_PACK

This example shows how ASCII_PACK can be used to prepare ASCII data before using a COMMREQ to send it to a HART module. First, the logic sets up the data that will be used by the COMMREQ. The ASCII_PACK function block packs the 32 ASCII characters of the message and also places that into the COMMREQ data area. After clearing the COMMREQ status to 0, the logic uses a COMMREQ to send HART command 17 "Write Message" to the device.

HART ASCII format packs data into 6 bits per character, 4 characters per 3 bytes. This chart shows the format with the most significant hex digits in the rightmost column and the lowest row.

Less significant

	0	**1**	**2**	**3**	**4**	**5**	**6**	**7**	**8**	**9**	**A**	**B**	**C**	**D**	**E**	**F**
0	at	A	B	C	D	E	F	G	H	I	J	K	L	M	N	O
1	P	Q	R	S	T	U	V	W	X	Y	Z	[	\	]	^	_
2	SP	!	“	#	$	%	&	‘	(	)	*	+	,	-	.	/
3	0	1	2	3	4	5	6	7	8	9	:	;	<	=	>	?

More significant

Figure 342: Ladder Logic for ACSII Pack

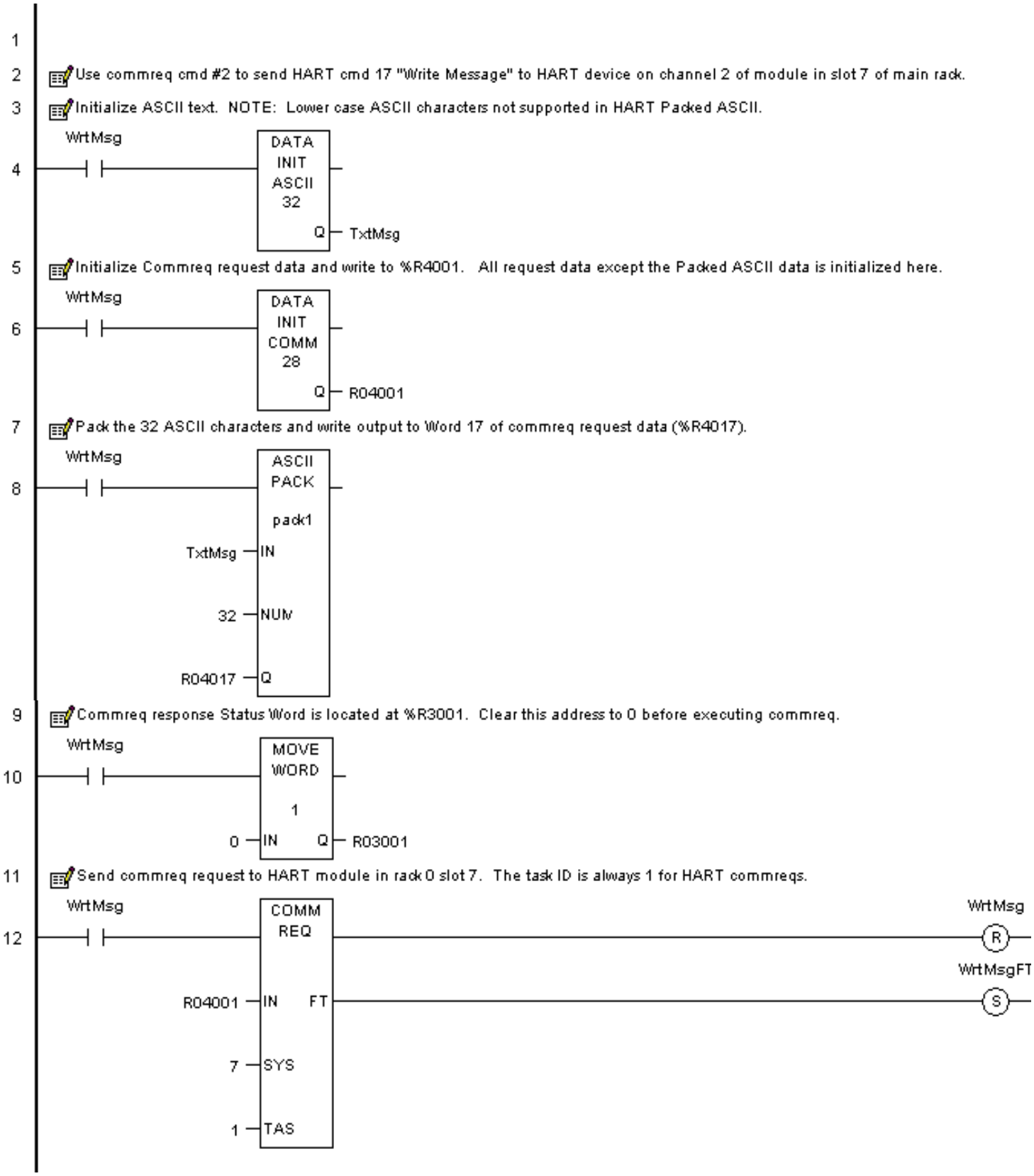
1
2 Use commreq cmd #2 to send HART cmd 17 "Write Message" to HART device on channel 2 of module in slot 7 of main rack.
3 Initialize ASCII text. NOTE: Lower case ASCII characters not supported in HART Packed ASCII.
WrtMsg
4
DATA INIT ASCII 32
Q
TxtMsg
5 Initialize Commreq request data and write to %R4001. All request data except the Packed ASCII data is initialized here.
WrtMsg
6
DATA INIT COMM 28
Q
R04001
7 Pack the 32 ASCII characters and write output to Word 17 of commreq request data (%R4017).
WrtMsg
8
ASCII PACK
pack1
TxtMsg
IN
32
NUM
R04017
Q
9 Commreq response Status Word is located at %R3001. Clear this address to 0 before executing commreq.
WrtMsg
10
MOVE WORD
1
0
IN
Q
R03001
11 Send commreq request to HART module in rack 0 slot 7. The task ID is always 1 for HART commreqs.
WrtMsg
12
COMM REQ
WrtMsg
R
WrtMsgFT
S
R04001
IN
FT
7
SYS
1
TAS

11.8.4 ASCII_UNPACK

ASCII_UNPACK can be used to unpack ASCII characters returned by a HART device in Pass-Through Reply data send in response to COMMREQ 2.

All of the function block parameters are either Type = WORD, Pass-By = Value or word arrays of Type = WORD and Pass-by = Reference. All word-based reference memory types and symbolics can be used.

Parameter types:

IN - Type = WORD, Length = 12, Pass-by = Reference

NUM - Type = WORD, Length = 1, Pass-by = Value

Q - Type = WORD, Length = 16, Pass-by = Reference

11.8.5 Example Function Block 3: ASCII_UNPACK:

In this example, after initializing the COMMREQ completion status, the ladder logic sends COMMREQ command #12, "Read Message" to the HART module in Rack 0, Slot 7. When the status = complete and the Response Byte Count =24, showing that all the data is present, the ASCII_UNPACK function block unpacks the HART ASCII data.

Figure 343: Ladder Logic for ACSII Unpack

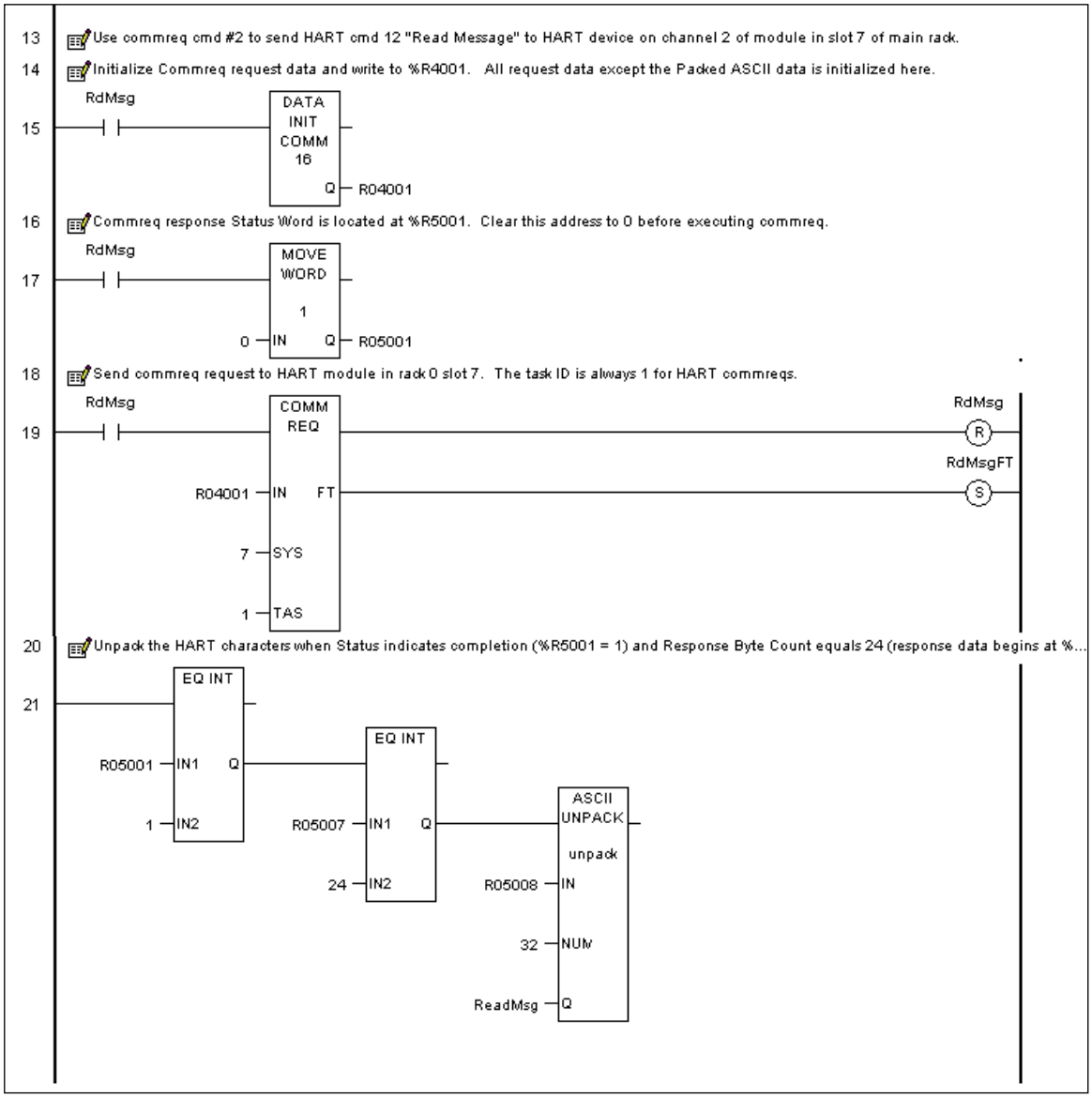

Section 12: Analog Mixed I/O Modules

This chapter describes the following Analog Mixed I/O modules for PACSystems RX3i controllers.

Analog Mixed I/O Module Description	Catalog Number	Section
Analog Module 4-Input 2-Output Current/Voltage	IC694ALG442	12.1
Analog Module 4-Input 2-Output Current/Voltage with Advanced Diagnostics	IC694ALG542	12.2

12.1 Analog Module 4-Input/2-Output Current/Voltage: IC694ALG442

Figure 344: IC694ALG442

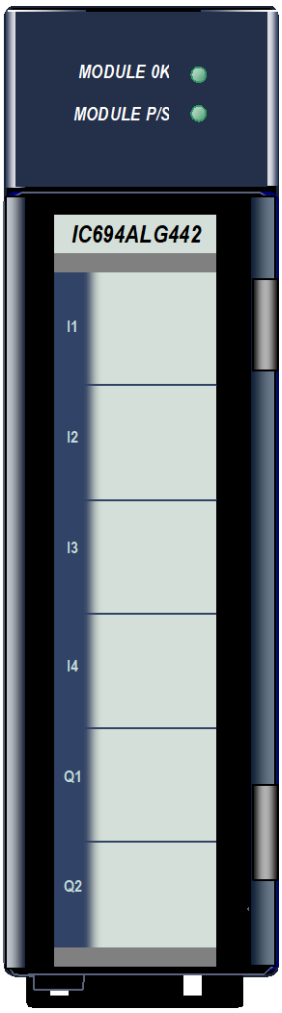

Analog Current/Voltage Input/Output module, IC694ALG442, provides four differential input channels and two single-ended output channels. Each channel can be configured with the Machine Edition software for one of the following ranges:

- 0 to +10 V (unipolar), default.
- -10 to +10 V (bipolar)
- 0 to 20 mA
- 4 to 20 mA

Input channels can also be configured for 4 - 20 mA Enhanced mode.

This module may be installed in any I/O slot in the RX3i system.

12.1.1 Features

Outputs can be configured to either Hold Last State if system power is interrupted or to reset to the low end of their range. Outputs can also be configured to operate in ramp mode on command from the application program. In ramp mode, the output channel ramps to a new value over a period of time, rather than taking the new value immediately.

High and low alarm limits can be set for all input channels and an open-wire fault (current output modes) can be reported to the CPU for each output channel.

Revision BA & later supports insertion into and removal from an RX3i Universal Backplane which is under power. Refer to *Hot Insertion and Removal*.

Module supports firmware upgrades using the WinLoader software utility (if the host CPU has a serial port) or using a Web-based tool (if the host CPU has no serial port). Instructions are included with the firmware upgrade kit.[25]

12.1.2 Isolated +24 Vdc Power

This module must receive 24 Vdc power from an external source. The external source must be connected to the terminal block of this module.

12.1.3 LEDs: ALG442

Module **OK** LED provides module status information as follows:

ON: status is OK, module configured;

OFF: no backplane power or software not running (watchdog timer timed out);

Continuous rapid blinking: configuration data not received from CPU;

Slow blinking, then OFF: failed power-up diagnostics or encountered code execution error.

The **USER SUPPLY** LED indicates that the external 24 Vdc supply is within specifications.

12.1.4 Specifications: ALG442

Power Requirements	
External Supply Voltage Range	20 to 30 Vdc (24 Vdc typical)
Power Supply Rejection Ratio	Current: 5 µA/V (typical), 10 µA/V (maximum) Voltage: 25 m V/V (typical), 50 mV/V (maximum) (Measured by varying V_{USER} from 24 to 30 Vdc)
Voltage Ripple	10%
Power Consumption	95 mA from internal +5 Vdc Supply, 150 mA from external supply
Update Rate	Update Rate: 3 ms
Isolation, Field to Backplane (optical) and to frame ground	250 Vac continuous 1500 Vac for 1 minute
Analog Outputs	Two, Single–Ended
Analog Current Output	
Output Ranges	0 to 20 mA, 4 to 20 mA
Resolution	0 to 20 mA: 0.6 µA (1 LSB = 0.6 µA) 4 to 20 mA: 0.5 µA (1 LSB = 0.5 µA)
Absolute Accuracy[74,75]	±0.1% of full scale at 25°C (77°F), typical ±0.25% of full scale at 25°C (77°F), maximum ±0.5% of full scale over operating temperature range (maximum)
Maximum Compliance Voltage	V_{USER} −3 V (minimum) to V_{USER} (maximum)
User Load	0 to 850 Ω (minimum at V_{USER} = 20 V, maximum 1350 Ω at V_{USER} = 30 V)
Output Load Capacitance	2000 pF (maximum)
Output Load Inductance	1 H (maximum)
Analog Voltage Output	
Output Ranges	-10 to +10 V (bipolar), 0 to +10 V (unipolar)
Resolution	−10 V to +10 V: 0.3125 mV (1 LSB = 0.3125 mV) 0 to +10 V: 0.3125 mV (1 LSB = 0.3125 mV)
Absolute Accuracy[76,75]	±0.25% of full scale at 25°C (77°F), typical ±0.5% of full scale at 25°C (77°F), maximum ±1.0% of full scale over operating temperature range (maximum)
Output Loading	5 mA (2 kΩ minimum resistance)
Output Load Capacitance	1 µF (maximum capacitance)
Analog Inputs	Four, differential

[74] *Analog Current output: In the presence of severe Radiated RF interference (IEC 61000-4-3, 10V/m), accuracy may be degraded to ±1% of full scale.*

[75] *Applicable for all inputs and outputs: In the presence of severe Conducted RF interference (IEC 61000-4-6, 10Vrms), accuracy may be degraded to ±2% of full scale.*

[76] *Analog Voltage output: In the presence of severe Radiated RF interference (IEC 61000-4-3, 10V/m), accuracy may be degraded to ±4% of full scale.*

Power Requirements	
Analog Current Input	
Input Ranges	0 to 20 mA, 4 to 20 mA, 4 to 20 mA Enhanced
Resolution	Versions –Dx and later: 0.625 µA (1 LSB = 0.625 µA) Earlier versions: 5 µA (1 LSB = 5 µA)
Absolute Accuracy[77]	±0.25% of full scale at25°C (77°F) ±0.5% of full scale over specified operating temperature range
Linearity	<1 LSB
Common Mode Voltage	200 Vdc (maximum)
Common Mode Rejection	>70 dB at DC; >70 dB at 60 Hz
Cross Channel Rejection	>80 dB from DC to 1 kHz
Input Impedance	250 Ω
Input Filter Response	29 Hz
Analog Voltage Input	
Input Ranges	0 to +10 V (unipolar), -10 to +10 V (bipolar)
Resolution	Versions –Dx and later, both ranges: 0.3125 mV (1 LSB = 0.3125 mV) Earlier versions: 0 to +10 V: 2.5 mV (1 LSB = 2.5 mV) –10 to +10 V: 5 mV (1 LSB = 5 mV)
Absolute Accuracy[78,75]	±0.25% of full scale at25°C (77°F); ±0.5% of full scale over specified operating temperature range
Linearity	<1 LSB
Common Mode Voltage	200 Vdc (maximum)
Common Mode Rejection	>70 dB at DC; >70 dB at 60 Hz
Cross Channel Rejection	>80 dB from DC to 1 kHz
Input Impedance	800 kΩ (typical)
Input Filter Response	38 Hz

For product standards and general specifications, refer to refer to Appendix A:.

In order to meet the IEC 1000-4-3 levels for RF Susceptibility refer to Appendix A:. When this module is present, the system must be mounted in a metal enclosure.

[77] *Analog Current Input: In the presence of severe Radiated RF interference (IEC 61000-4-3, 10V/m), accuracy may be degraded to ±2% of full scale.*

[78] *Analog Voltage Input: In the presence of severe Radiated RF interference (IEC 61000-4-3, 10V/m), accuracy may be degraded to ±1% of full scale*

12.1.5 Field Wiring: ALG442

The diagram below shows voltage and current connections for Module. Each channel can be configured independently as a voltage or a current channel, not both simultaneously.

Terminal	Signal	Definition
1	24VIN	User-supplied +24 Vdc Input
2	JMP1	Jumper terminal for connecting 250 Ω sense resistor for CH1
3	JMP2	Jumper terminal for connecting 250 Ω sense resistor for CH2
4	+CH1	Positive connection for differential analog input channel 1
5	+CH2	Positive connection for differential analog input channel 2
6	-CH1	Negative connection for differential analog input channel 1
7	-CH2	Negative connection for differential analog input channel 2
8	JMP3	Jumper terminal for connecting 250 Ω sense resistor for CH3
9	JMP4	Jumper terminal for connecting 250 Ω sense resistor for CH4
10	+CH3	Positive connection for differential analog input channel 3
11	+CH4	Positive connection for differential analog input channel 4
12	-CH3	Negative connection for differential analog input channel 3
13	-CH4	Negative connection for differential analog input channel 4
14	V_{out} CH1	Voltage output for channel 1
15	I_{out} CH1	Current output for channel 1
16	V_{out} CH2	Voltage output for channel 2
17	I_{out} CH2	Current output for channel 2
18	V COM	Common return for voltage outputs
19	I RET	Common return for User-supplied +24 V and current outputs
20	GND	Frame ground connections for cable shields

Figure 345: Field Wiring ALG442

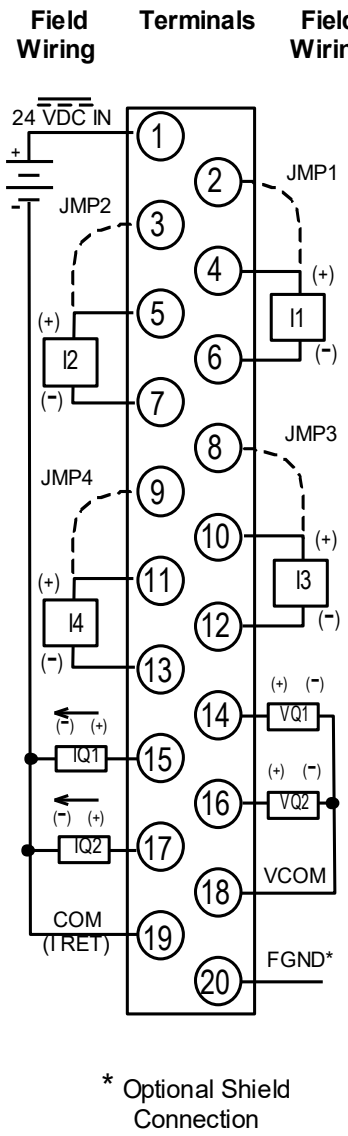

12.1.6 Input Scaling: ALG442

Resolution per bit depends on the configured input or output range as shown in the table of module specifications. Module scales each current and voltage input to a value in counts for the CPU.

Configured Range	Scaled Counts Values
0 to 10 V (default)	0 to 32767
-10 to 10 V	-32768 to 32767
4 to 20 mA	0 to 32767
0 to 20 mA	0 to 32767
0 to 20 mA Enhanced	-8000 to 32,000

In the 0 to +10 V default range, 0 V corresponds to a count of 0 and +10 V corresponds to a count of 32000. In the -10 to +10 V range, -10 V corresponds to a count of -32000 and +10 V corresponds to a count of +32000. Full 12-bit resolution is available over either range.

In the 4 to 20 mA range, 4 mA corresponds to a count of 0 and 20 mA corresponds to a count of 32000. In the 0 to 20 mA range, 0 mA corresponds to a count of 0 and 20 mA corresponds to a count of 32000. Full 12-bit resolution is available over the 0 to 20 mA range. If the value exceeds 32,000 it is truncated to 32,000.

In the 4 to 20 mA Enhanced range, 0 mA corresponds to a count of -8000, 4 mA corresponds to a count of 0 (zero) and 20 mA corresponds to a count of +32000. The Enhanced range automatically provides 4 to 20 mA range scaling. Negative digital values are provided for input current levels between 4 mA and 0 mA. This creates a low alarm limit that detects when the input current falls from 4 mA to 0 mA, providing open-wire fault detection in 4 to 20 mA applications. If the value exceeds 32,000 it is truncated to 32,000.

Figure 346: Input Voltage Scaling ALG442

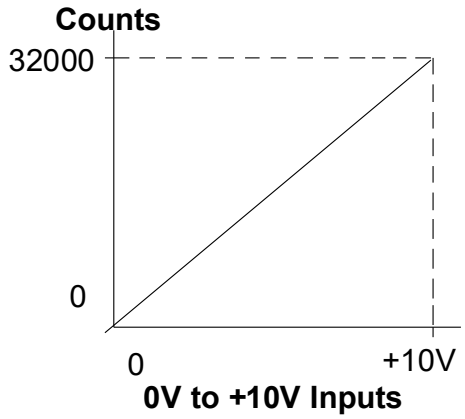

Figure 347: Input Current Scaling ALG442

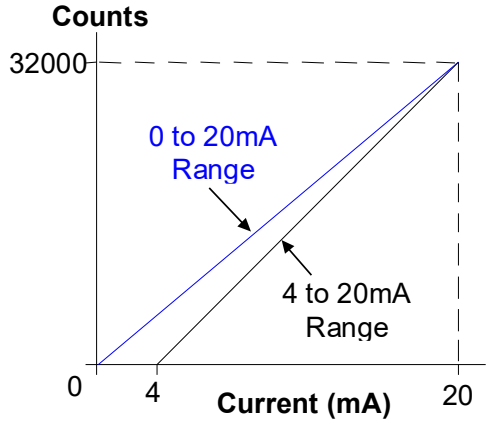

If the current source is reversed into the input, or is less than the low end of the current range, Module inputs a data word corresponding to the low end of the current range (0000H in %AI). If an input is out of range (greater than 20 mA), the A/D converter adjusts it to full scale (corresponding to 7FFFH in %AI).

12.1.7 Output Scaling: ALG442

Module scales counts data received from the CPU to a current or voltage value for each output.

Configured Range	Values Sent By CPU	Values Accepted by Module
0 to 10 V (default)	0 to 32767	0 to 32767
-10 to 10 V	-32768 to 32767	- 32768 to 32767
4 to 20 mA	0 to 32767	0 to 32000
0 to 20 mA	0 to 32767	0 to 32767

For a 0 to 10 V output, Module scales count outputs from 0 to 32000 to output voltages from 0 to +10 V. Module scales count values from 32001 to 32767 to over range voltages up to a maximum of approximately 10.24 V.

For a -10 to +10 V output, Module scales count outputs in the range ±32000 to output voltages from −10 V to +10 V. Module scales count values from -32001 to -32768 and from +32001 to +32767 to over range voltages up to a maximum of approximately ±10.24 V.

For a 4 to 20 mA output, Module scales count outputs from 0 to 32000 counts to output currents from 4 to 20 mA. If the CPU sends a value above 32000 counts, Module uses the value 32000 in the D/A converter. No error is returned.

For a 0 to 20 mA output, Module scales count outputs from 0 to 32000 to output currents from 0 to 20 mA. Module scales count values from 32001 to 32767 up to a maximum output current of approximately 20.5 mA.

Figure 348: Output Voltage Scaling ALG442

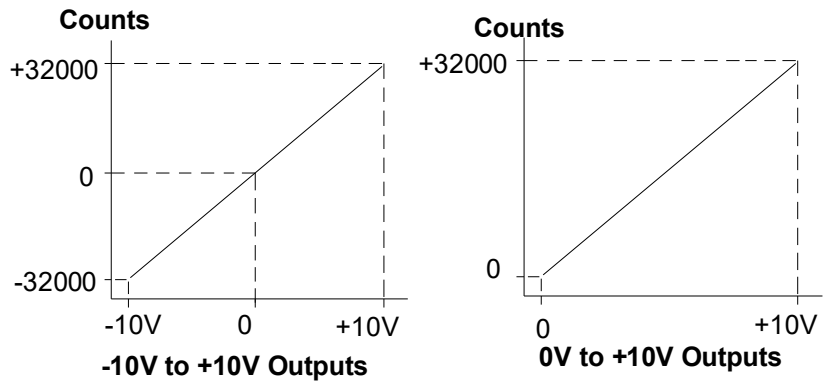

Figure 349: Output Current Scaling ALG442

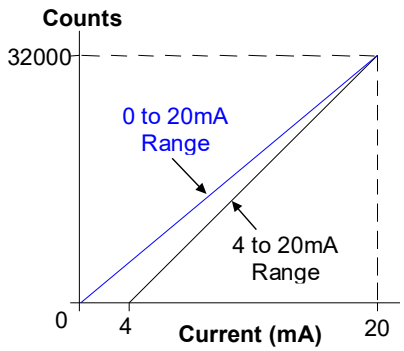

12.1.8 I/O Data: ALG442

This module uses two %AQ references and four %AI references, depending on configuration. Data in the %AI and %AQ registers is in 16–bit 2's complement format.

MSB LSB

X	11	10	9	8	7	6	5	4	3	2	1	0	X	X	X

Module also uses 8, 16 or 24 %I references for status data, depending on the alarm status configuration. Status data format is shown on the next page.

Input Data

Resolution of the converted signal is 12-bit binary (1 part in 4096). The placement of the 12 bits from the A/D converter in the %AI data word is shown above.

The bits in the %AI data table that were not used are forced to 0 (zero) by the analog input channel.

Output Data

Each output channel is capable of converting 15 to 16 bits (depending on the range selected) of binary data to an analog output.

12.1.10 Status Data: ALG442

The Analog Module can be configured to return 8, 16, or 24 status bits to the PLC CPU. Content of the status data is displayed in the following figure.

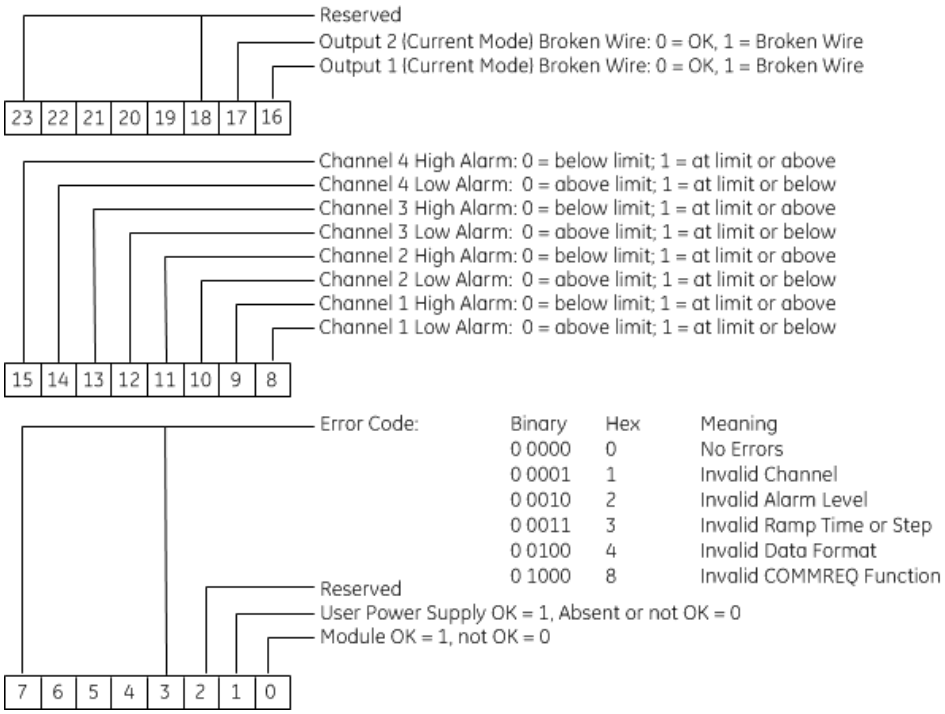

Error Code

Byte 1 of the status data contains a status/error code for COMMREQs sent to Module. Only the most recent error is reported; an existing error code will be overwritten if another error occurs. The priority of errors is:

1. Invalid COMMREQ function (highest priority)
2. Invalid channel.
3. Invalid data (ramp or alarm parameter) (lowest priority).

If multiple errors occur, the one with the highest priority is reported in the error code. Module will not stop standard operation if an error is detected; these error bits are informational only, and can be ignored.

12.1.12 Configuration: ALG442

The following module parameters can be configured using the Machine Edition software:

Module Settings

Parameter	Choices	Description
Stop Mode	Hold (default) or DeFlow	Output state when module goes from Run to Stop mode. If the configured Stop Mode is *Hold,* Module holds outputs at the last state received from the CPU. If the Stop Mode is *Default Low,* the outputs will go to their low values as follows: Current mode (4-20 mA): outputs go to 4 mA Current mode (0-20 mA): outputs go to 0 mA Voltage mode (unipolar (0 to +10 Vdc) and bipolar (+10 to -10 Vdc): outputs go to 0 V
Input Channel Value Reference Address	Valid memory type: %AI	Starting %AI address for the analog input data of this module.
Input Channel Value Reference Length	Read-only	Each input channel provides 16 bits (1 word) of analog input data to the Controller CPU.
Output Channel Value Reference Address	Valid memory type: %AQ	Starting %AQ address for the analog output data of this module.
Output Channel Value Reference Length	Read-only	Each input channel receives 16 bits (1 word) of analog input data to the Controller CPU.
Module Status Reference Address	Valid memory type: %I	Starting %I address for the status data of this module.
Module Status Reference Length	0 (Module status reporting Disabled) 8 (module and power status only) 16 (above plus input status) 24 (all above plus output status)	Number of status bits (0 to 24) that will be used for module and channel status data. When set to 0, status reporting is disabled. To enable status reporting, set this parameter to a value other than 0. For resulting data format, refer to Section 12.1.9 above.
I/O Scan Set	1 through 32	Assigns Module I/O status data to a scan set defined in the CPU configuration. Determines how often the RX3i polls the data

The choice for Stop Mode (Hold or DeFlow) determines how outputs operate when Module goes from Run to Stop mode. If the configured Stop Mode is Hold (the default), Module holds outputs at the last state received from the CPU. If the Stop Mode is DeFlow, the outputs will go to their low values. In current mode (4-20 mA), outputs go to 4 mA if configured for DeFlow. In current mode (0-20 mA), outputs go to 0 mA if

configured for DeFlow. In voltage mode unipolar (0 to +10 Vdc) and bipolar (+10 to -10 Vdc), outputs go to 0 V if configured for DeFlow.

Output Channel Configuration Parameters ALG442

Parameter	Choices	Description
Output Range	0 to +10 V, -10 to +10 V, 4 to 20 mA, 0 to 20 mA	Type of output range.

Input Channel Configuration Parameters ALG442

Parameter	Choices	Description
Input Range	0 to +10 V, -10 to +10 V, 4 to 20 mA, 0 to 20 mA, 4 to 20 mA Enhanced	Type of input range
Alarm Low Limit	-32768 to 32759	Low limit alarm value for each input. Must be less than the high alarm for the same channel.
Alarm High Limit	-32767 to 32760	High limit alarm value for each input. The Alarm Low and Alarm High parameters can be used to set up limits that cause alarms to be passed to the Controller for each channel. Values entered without a sign are assumed to be positive. These configured alarm limits are stored until changed by a new configuration. The configured high and low alarm limits can be changed temporarily by a COMMREQ command.

The Alarm Low and Alarm High parameters can be used to set up limits that cause alarm indications to be passed to the PLC for each channel. Values entered without a sign are assumed to be positive. These configured alarm limits are stored until changed by a new configuration. The configured high and low alarm limits can be changed temporarily by a COMMREQ from the application program as described later in this chapter.

12.1.13 Ramp Mode Operation: ALG442

Outputs on module ALG442 can be set up by a COMMREQ command to operate in Ramp mode. In normal operating mode, a new value entered in the %AQ reference for an output channel causes the output to change directly to the new value. In Ramp mode, the output goes to the new value over a period of time. The output channel starts a new ramp (either up or down) each time the value in its %AQ reference changes. Module performs range checking on new output values and automatically adjusts out-of-range values before making the ramp computations.

Figure 350: Ramp Mode Example ALG442

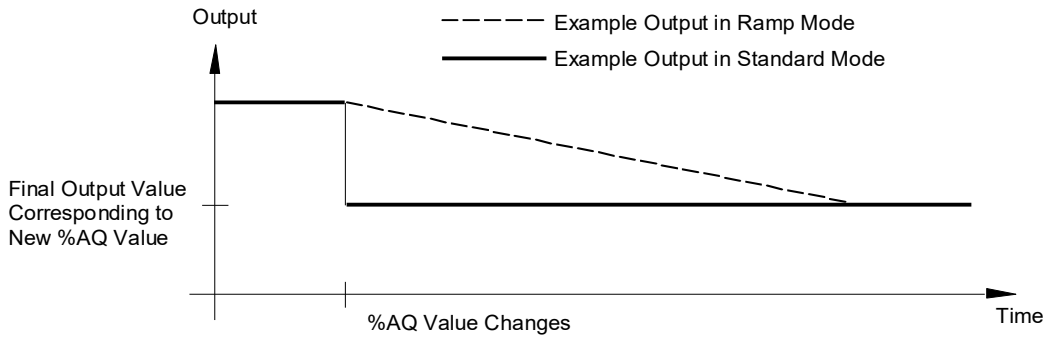

Use of Ramp mode is set up for either channel or both output channels using a COMMREQ command as explained in this chapter. The ramp slope can be set up in the COMMREQ as:

- a total ramp time from 1 millisecond to 32 seconds, or:
- a sequence of 1 to 32000 1-millisecond steps.

A channel stays in Ramp mode until Module receives a new COMMREQ either changing or canceling the ramp operation, or until power is cycled. The channel will not change modes after a hardware configuration download. Because COMMREQ settings are temporary, it will be lost after a power cycle.

If Module receives a new COMMREQ that changes ramp operation while an output is in the process of ramping, the new ramp settings take effect as follows:

- If Ramp mode is turned off during a ramp, the channel goes directly to the value in its %AQ reference.
- If a channel is set up to ramp over a period of time, but a new COMMREQ is received commanding the channel to instead ramp in a sequence of measured steps, ramp operation changes as soon as the COMMREQ is processed (assuming that the step is valid).
- If a channel is set up to ramp as a sequence of measured steps, but a new COMMREQ is received commanding the channel to instead ramp over a period of time, it immediately starts a new ramp using the present output as the starting output and the present time as the start time.

If Module receives a Ramp command for an invalid channel, step height or ramp time, Module ignores the command and returns an error code in the first byte of its %I status references. The error code can be cleared by a Clear Errors COMMREQ as described in this chapter, or by reconfiguring Module.

12.1.14 Changing Module Operation on Command: ALG442

Module ALG442 can respond directly to a specific COMMREQ command from the application program to:

- clear the %I error code for this module
- modify the Input alarm limits, and
- put one or both outputs in Ramp mode and set up the ramp characteristics

These changes to module are not retained during loss of power. If Module is power-cycled, new commands must be sent to Module to again modify the configured alarm limits, or to set up Ramp operation for the outputs.

COMMREQ Format

The Communications Request is triggered when the logic program passes power to the COMMREQ Function Block.

Figure 351: COMMREQ usage ALG442

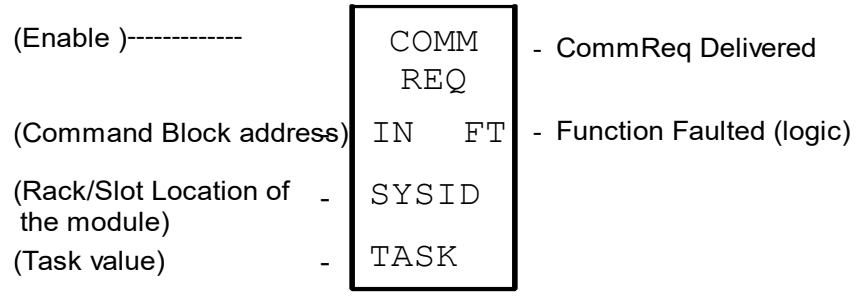

When sent to module ALG442, the parameters of the COMMREQ are:

Parameter	Description
Enable	Control logic for activating the COMMREQ Function Block.
IN	The location of the Command Block. The Command Block contains the parameters of the COMMREQ request. It can be located at any valid address within a word-oriented memory area (%R, %AI, %AQ, %P, %L, or %W) in the PACSystems PLC.
SYSID	A hexadecimal word value that gives the rack (high byte) and slot (low byte) location of the analog module.
TASK	Task must be set to zero.

FT Output	The FT output is set if the PLC CPU is unable to deliver the COMMREQ to Module. When the FT output is set, Module is unable to return a COMMREQ status word to the PLC logic application.

COMMREQ Command Block

The format of the COMMREQ for module ALG442 is displayed in the following figure. For more information about using COMMREQs, refer to the online help and the *PACSystems, RX3i and RSTi-EP CPU Reference Manual,* GFK-2222.

Word Offset	Value	Description
Word 1	Must be 0004	Length of the command block
Word 2	0000	Not used
Word 3	(Refer to below)	Memory type of COMMREQ Status Word
Word 4	0-based.	Offset of COMMREQ Status Word
Word 5	0	Reserved
Word 6	0	Reserved
Word 7	E201H (-7679 decimal)	COMMREQ command number
Word 8	0006	Byte length of Command Data (refer to below)
Word 9	(Refer to *Memory Types and Offsets* below)	Memory type in the CPU for the Command Data
Word 10	0-based	Memory offset for the Command data

Memory Types and Offsets

The COMMREQ Command Block specifies a memory type and location to receive status information about the execution of the command (word 3), and for the command data (word 9). The memory types are listed in the following table. ***For word 4 and word 10, the address offset is a zero-based number.*** For example, the offset for %R100 is 99 decimal.

Type	Value (Decimal)	Value (Hex.)	Description
%R	8	08H	Register memory (word mode)
%AI	10	0AH	Analog input memory (word mode)
%AQ	12	0CH	Analog output memory (word mode)
%I	16 70	10H 46H	Discrete input memory (byte mode) Discrete input memory (bit mode)
%Q	18 72	12H 48H	Discrete output memory (byte mode) Discrete output memory (bit mode)
%T	20 74	14H 4AH	Discrete temporary memory (byte mode) Discrete temporary memory (bit mode)
%M	22 76	16H 4CH	Discrete momentary internal memory (byte mode) Discrete momentary internal memory (bit mode)
%G	56 86	38H 56H	Discrete global data table (byte mode) Discrete global data table (bit mode)
%W	196	C4H	Word memory (word mode; limited to %W1-%W65536)

COMMREQ Command Data Format

In the COMMREQ Command Block (above) words 9 and 10 assign a CPU memory location for six bytes of command data. The program logic can use these bytes to set the parameters of the COMMREQ. This module does not use the last command data word.

word 1	command word
word 2	alarm or ramp data
word 3	Unused for module ALG442

Command to be Performed	Word 1 Contains	Word 2 Contains
Change the low alarm limit of the specified input channel to the value in word 2.	0000 (Input 1) 0001 (Input 2) 0002 (Input 3) 0003 (Input 4)	New low alarm limit for the input
Change the high alarm limit of the specified input channel to the value in word 2.	0010 (Input 1) 0011 (Input 2) 0012 (Input 3) 0013 (Input 4)	New high alarm limit for the input
Change the low alarm limit of the specified input channel by the increment in word 2.	0020 (Input 1) 0021 (Input 2) 0022 (Input 3) 0023 (Input 4)	Increment used to change the configured low alarm limit. Increment can be + or -.
Change the high alarm limit of the specified input channel by the increment in word 2.	0030 (Input 1) 0031 (Input 2) 0032 (Input 3) 0033 (Input 4)	Increment used to change the configured high alarm limit. Increment can be + or -.
Turn off Ramp operation for the specified output channel and put it in normal mode.	0040 (Output 1) 0041 (Output 2)	
Put the specified output channel in Ramp step mode. Step increment in word 2.	0050 (Output 1) 0051 (Output 2)	Step (1 to 32000 counts) to be taken each millisecond.
Put the specified output channel in Ramp time mode. Ramp total time in word 2.	0060 (Output 1) 0061 (Output 2)	Time in milliseconds: 1 to 32000 (1 ms to 32 seconds)
Clear the %I error code for this module.	00C0	

If the requested command is not valid (for example, if the changed alarm limit would be out of range) Module ignores the COMMREQ command and returns an error code in the %I status data for this module. Module does NOT stop operating; these error bits are informational only and can be ignored. The error code remains in the %I status bits until cleared by another COMMREQ (command 00C0, refer to directly above), or until Module is reconfigured.

COMMREQ Example

This example shows setting up COMMREQ data and issuing the COMMREQ to an Analog Mixed module.

The application program should verify the completion of the COMMREQ in progress before initiating another, so Module does not receive COMMREQs faster than it can process them. One way to do that is to zero the contents of the COMMREQ status (%R0001 in this example) as the COMMREQ is enabled. Since the status returned for a completed COMMREQ is never zero, a non–zero status word indicates that the COMMREQ has completed.

In this example, the COMMREQ command block starts at %R0002 and is initialized on the first scan. The 6 bytes of COMMREQ data sent to Module must have been moved into %R0101-%R0103 before the COMMREQ is enabled.

Module is located in rack 0, slot 2 so the SYSID input to the COMMREQ is 0002.

Figure 352: COMMREQ Example ALG442

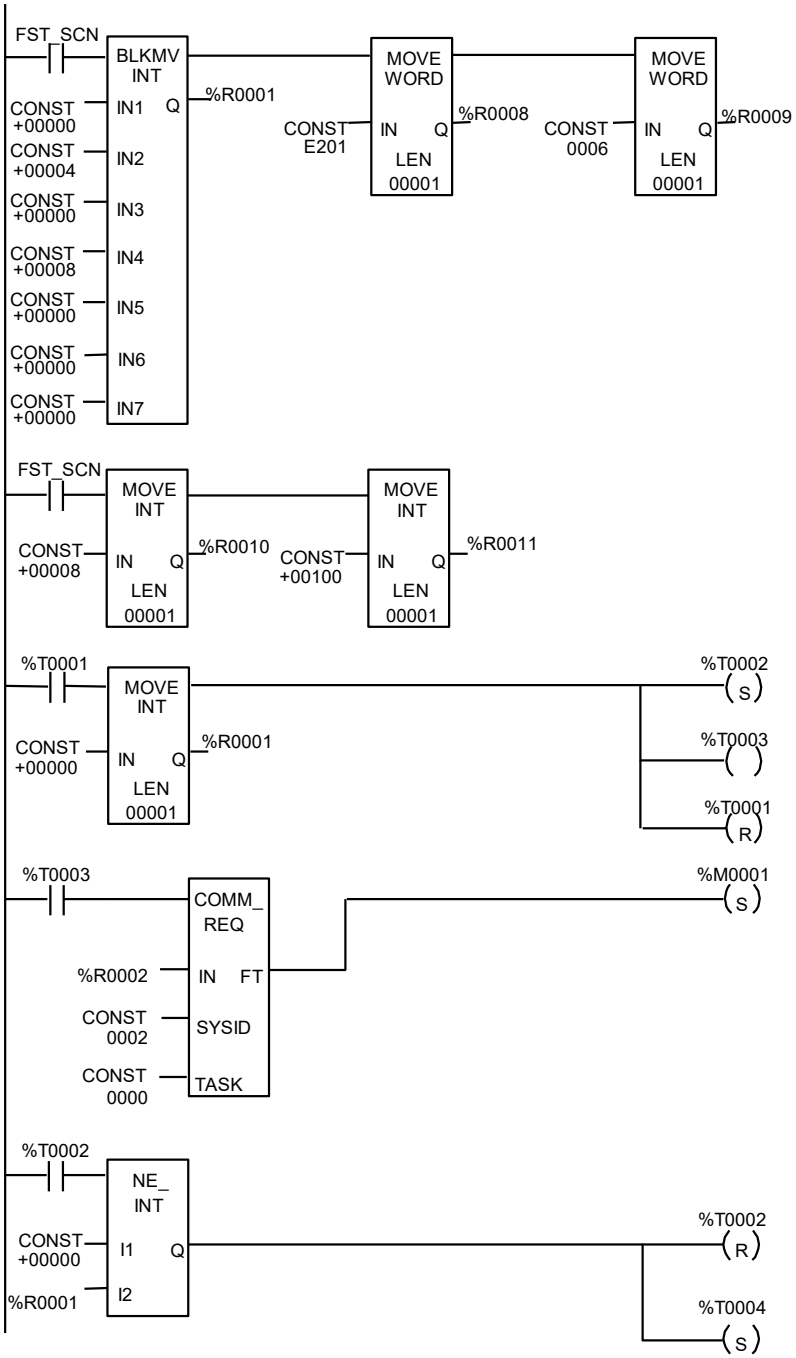

Setting %T0001 moves zero into the COMMREQ status word, enables %T0003 for one sweep to initiate the COMMREQ, and sets %T0002 to begin checking the status word. When a non–zero status word is detected, %T0002 is reset to discontinue checking and %T0004 is set to indicate that Module is ready for the next COMMREQ. Reference %M0001 is set if a COMMREQ fault occurs.

12.2 Analog Module 4-Input/2-Output Current/Voltage with Advanced Diagnostics: IC694ALG542

Advanced Diagnostics mixed I/O Analog Current/Voltage module, IC694ALG542, provides four differential input channels and two single-ended output channels. Each channel can be configured with the Machine Edition software for one of the following ranges:

- 0 to +10 V (unipolar), default.
- -10 to +10 V (bipolar)
- 0 to 20 mA
- 4 to 20 mA

Input channels can also be configured for 4–20 mA Enhanced mode. Individual outputs can be configured to either Hold Last State if system power is interrupted or to reset to the low end of their range. Outputs can also be configured to operate in ramp mode on command from the application program. In ramp mode, the output channel ramps to a new value over a period of time, rather than taking the new value immediately.

High and low alarm limits can be set for all input channels and an open wire fault (current output modes) can be reported to the CPU for each output channel.

Figure 353: IC694ALG542

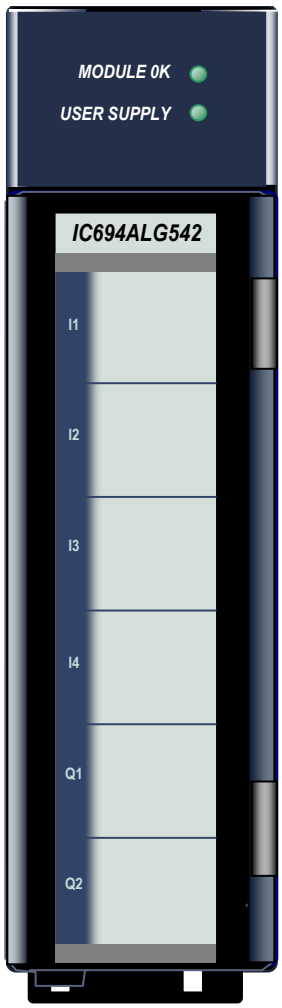

12.2.1 Features

- Open-circuit detection for all inputs in 4 to 20 mA Enhanced Range
- Configurable scaling and offsets per channel
- High alarm, low alarm, high-high alarm, low-low alarm detection and reporting selectable per channel
- Module fault reporting
- Supports diagnostic point fault contacts in the logic program
- Positive and negative Rate of Change Alarms
- Display of module serial number, revision and manufacturing date code in programming software.
- Module supports insertion into and removal from an RX3i Universal Backplane which is under power. Refer to Section 2.6.4, *Hot Insertion and Removal*.
- Module supports firmware upgrades using the WinLoader software utility (if the host CPU has a serial port) or using a Web-based tool (if the host CPU has no serial port). Instructions are included with the firmware upgrade kit.[25]

12.2.2 Isolated +24 Vdc Power

This module requires 150 mA plus loop current(s) from a user-supplied 24 Vdc external source.

12.2.4 LEDs: ALG542

Module **OK** LED provides module status information as follows:
ON: status is OK, module configured;
OFF: no backplane power or software not running (watchdog timer timed out);
Continuous rapid blinking: configuration data not received from CPU;
Slow blinking, then OFF: failed power-up diagnostics or encountered code execution error.
The **USER SUPPLY** LED indicates that the external 24 Vdc supply is within specifications.

12.2.5 Specifications: ALG542

Power Requirements	
External Supply Voltage Range	20 to 30 Vdc (24 Vdc typical)
Power Supply Rejection Ratio	Current: 5 µA/V (typical), 10 µA/V (maximum) Voltage: 25 mV/V (typical), 50 mV/V (maximum) (Measured by varying V_{USER} from 24 Vdc to 30 Vdc)
Voltage Ripple	10%
Power Consumption	95 mA from backplane +5 Vdc supply 150 mA from external +24 Vdc supply
Update Rate	Update Rate: 2 ms
Isolation Field to Backplane (optical) and to frame ground	250 Vac continuous 1500 Vac for 1 minute
Analog Outputs	Two, Single–Ended
Analog Current Output	
Output Current Ranges	0 to 20 mA, 4 to 20 mA
Resolution	0 to 20 mA: 0.625 µA (1 LSB = 0.625 µA) 4 to 20 mA: 0.5 µA (1 LSB = 0.5 µA)
Absolute Accuracy[79,80]	±0.1% of full scale at 25°C (77°F), typical ±0.25% of full scale at 25°C (77°F), maximum ±0.5% of full scale over operating temperature range (maximum)
Maximum Compliance Voltage	V_{USER} –3 V (minimum) to V_{USER} (maximum)
User Load	0 to 850 Ω (minimum at V_{USER} = 20 V, maximum 1350 Ω at V_{USER} = 30 V)
Output Load Capacitance	2000 pF (maximum)

[79] *Analog Current Output: In the presence of severe Radiated RF interference (IEC 61000-4-3, 10V/m), accuracy may be degraded to ±1% of full scale.*

[80] *Applicable for all outputs and inputs: In the presence of severe Conducted RF interference (IEC 61000-4-6, 10Vrms), accuracy may be degraded to ±2% of full scale.*

Power Requirements	
Output Load Inductance	1 H (maximum)
Analog Voltage Output	
Output Ranges	-10 to +10 V (bipolar), 0 to +10 V (unipolar)
Resolution	–10 V to +10 V: 0.3125 mV (1 LSB = 0.3125 mV) 0 to +10 V: 0.3125 mV (1 LSB = 0.3125 mV)
Absolute Accuracy[81,80]	±0.25% of full scale at 25°C (77°F), typical ±0.5% of full scale at 25°C (77°F), maximum ±1.0% of full scale over operating temperature range (maximum)
Output Loading	5 mA (2 kΩ minimum resistance)
Output Load Capacitance	1 µF (maximum capacitance)
Analog Inputs	Four, differential
Analog Current Input	
Input Ranges	0 to 20 mA, 4 to 20 mA, 4 to 20 mA Enhanced
Resolution	0–20 mA: 0.625 µA (1 LSB = 0.625 µA) 4–20 mA: 0.5 µA/bit (1 LSB = 0.5 µA) 4–20 mA Enhanced: 0.5 µA/bit (1 LSB = 0.5 µA
Absolute Accuracy at 0–20 mA[82,80]	±0.25% of full scale at25°C (77°F); ±0.5% of full scale over specified operating temperature range
Absolute Accuracy at 4–20 mA[82,80]	±0.25% of full scale at25°C (77°F); ±0.5% of full scale over specified operating temperature range
Absolute Accuracy at 4–20 mA Enhanced[82, 80]	±0.25% of full scale at25°C (77°F); ±0.5% of full scale over specified operating temperature range
Linearity	<4 LSB
Common Mode Voltage	200 Vdc (maximum)
Common Mode Rejection	>70 dB at DC; >70 dB at 60 Hz
Cross Channel Rejection	>80 dB from DC to 1 kHz
Input Impedance	250 Ω
Input Filter Response	55 Hz
Analog Voltage Input	
Input Ranges	0 to +10 V (unipolar), -10 to +10 V (bipolar)
Calibration	Factory calibrated to: 2.5 mV per count on 0 V to +10 V (unipolar) range 5 mV per count on -10 to +10 V (bipolar) range
Resolution at 0V to +10 Vdc	0 to +10 V: 0.3125 mV (1 LSB = 0.3125 mV) –10 to +10 V: 0.3125 mV (1 LSB = 0.3125 mV)
Resolution at -10 Vdc to +10 Vdc	1 LSB = 0.3125 mV

[81] *Analog Voltage Output: In the presence of severe Radiated RF interference (IEC 61000-4-3, 10V/m), accuracy may be degraded to ±4% of full scale*

[82] *Analog Current Input: In the presence of severe Radiated RF interference (IEC 61000-4-3, 10V/m), accuracy may be degraded to ±2% of full scale.*

Power Requirements	
Absolute Accuracy[83,80] over specified operating temperature range	±0.25% of full scale at25°C (77°F); ±0.5% of full scale over specified operating temperature range
Linearity	<4 LSB
Common Mode Voltage	200 Vdc (maximum)
Common Mode Rejection	>70 dB at DC; >70 dB at 60 Hz
Cross Channel Rejection	>80 dB from DC to 1 kHz
Input Impedance	800 kΩ (typical)
Input Filter Response	55 Hz

For product standards and general specifications, refer to Appendix A:.

In order to meet the IEC 1000-4-3 levels for RF Susceptibility specified in Appendix A:, when this module is present, the system must be mounted in a metal enclosure.

[83] *Analog Voltage Input: In the presence of severe Radiated RF interference (IEC 61000-4-3, 10V/m), accuracy may be degraded to ±1% of full scale.*

12.2.6 Field Wiring: ALG542

The diagram below shows voltage and current connections for Module. Each channel can be configured independently as a voltage or a current channel, not both simultaneously.

Terminal	Signal	Definition
1	24VIN	User-supplied +24 Vdc Input
2	JMP1	Jumper terminal for connecting 250 Ω sense resistor for CH1 current mode
3	JMP2	Jumper terminal for connecting 250 Ω sense resistor for CH2 current mode
4	+CH1	Positive connection for differential analog input channel 1
5	+CH2	Positive connection for differential analog input channel 2
6	-CH1	Negative connection for differential analog input channel 1
7	-CH2	Negative connection for differential analog input channel 2
8	JMP3	Jumper terminal for connecting 250 Ω sense resistor for CH3 current mode
9	JMP4	Jumper terminal for connecting 250 Ω sense resistor for CH4 current mode
10	+CH3	Positive connection for differential analog input channel 3
11	+CH4	Positive connection for differential analog input channel 4
12	-CH3	Negative connection for differential analog input channel 3
13	-CH4	Negative connection for differential analog input channel 4
14	V_{out} CH1	Voltage output for channel 1
15	I_{out} CH1	Current output for channel 1
16	V_{out} CH2	Voltage output for channel 2
17	I_{out} CH2	Current output for channel 2
18	V COM	Common return for voltage outputs
19	I RET	Common return for User-supplied +24 Vdc and current outputs
20	GND	Frame ground connections for cable shields

Figure 354: Field Wiring ALG542

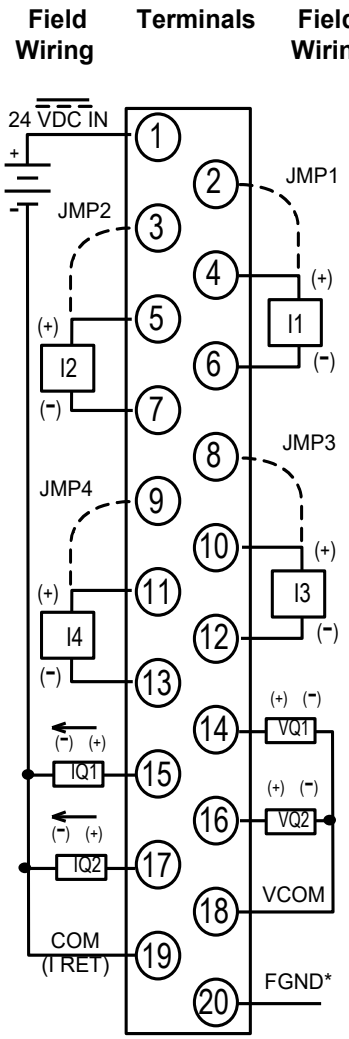

12.2.8 Input Scaling: ALG542

By default, Module converts a voltage or current input over the entire span of its configured Range. By modifying one or more of the four channel scaling parameters (Low/High Scale Value parameters), the scaled Engineering Unit range can be changed for a specific application. Scaling can provide inputs to the Controller that are already converted to their physical meaning, or convert input values into a range that is easier for the application to interpret. Scaling is always linear and inverse scaling is possible.

All alarm values apply to the scaled Engineering Units value, not to the A/D input value. The scaling parameters only set up the linear relationship between two sets of corresponding values. They do not have to be the limits of the input.

Example:

For a voltage input, 6.0 V equals a speed of 20 fps, and 1.0 V equals 0 fps. The relationship in this range is linear. For this example, the input values should represent speed rather than volts. The following channel configuration sets up this scaling:

High Scale Value (Eng Units) = 20.000
Low Scale Value (Eng Units) = 0.000
High Scale Value (A/D Units) = 6.000
Low Scale Value (A/D Units) = 1.000

For this example, 1.0 to 6.0 V is the normal voltage range, but Module will attempt to scale the inputs for a voltage that lies outside the range. If a voltage of 10.0 V were input to the channel, Module would return a scaled channel value of 36.000. The application should use alarms or other precautions for scaled inputs that are outside the acceptable range or otherwise invalid.

Figure 355: Input Scaling Example ALG542

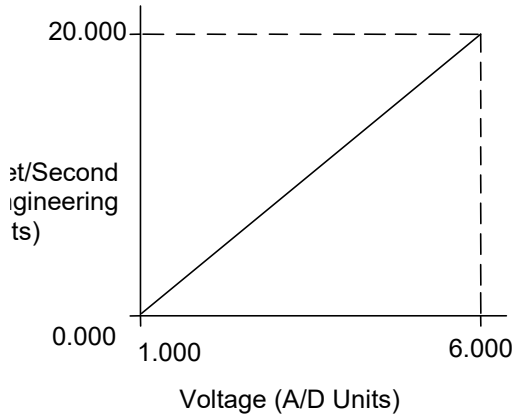

12.2.9 Output Scaling: ALG542

By default, Module converts a floating-point value from the CPU into a voltage or current output over the entire span of its configured Range. By modifying one or more of the four channel scaling parameters (Low/High Scale Value parameters), the scaled Engineering Unit range can be changed for a specific application. Scaling is always linear and inverse scaling is possible.

All alarm values apply to the scaled Engineering Units value, not to the A/D Units value. The scaling parameters only set up the linear relationship between two sets of corresponding values. They do not have to be the limits of the output.

Example:

In this example, the application should interpret 32000 counts as +10 Vdc and −32000 counts as -10 Vdc. The following channel configuration will scale a ±10 Vdc output channel to ±32000 counts.

Channel Value Format = 16-Bit Integer
High Scale Value (Eng Units) = 32000.0
Low Scale Value (Eng Units) = -32000.0
High Scale Value (A/D Units) = 10.000
Low Scale Value (A/D Units) = -10.000

Figure 356: Output Scaling Example ALG542

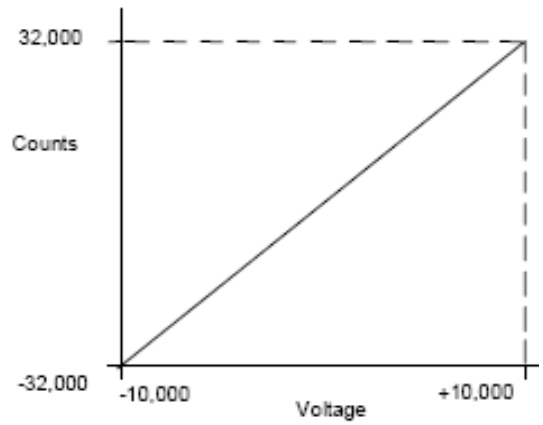

12.2.10 I/O Data: ALG542

This module uses two %AQ references and four %AI references, depending on configuration. Data in the %AI and %AQ registers is in 16-bit 2's complement format.

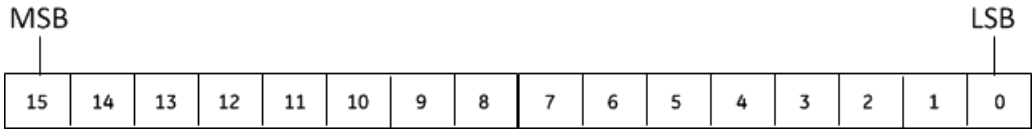
MSB
LSB
15
14
13
12
11
10
9
8
7
6
5
4
3
2
1
0

Input Data

Module reports its channel input data in its configured input words, beginning at its assigned Channel Value Reference Address. Each channel occupies 2 words, whether or not the channel is used: Depending on its configured Channel Value Format, each enabled channel reports a 32-bit floating-point or 16-bit integer value to the CPU.

In the 16-bit integer mode, the low word of the 32-bit channel data area contains the 16-bit integer channel value. The high word (upper 16-bits) of the 32-bit value is set with the sign extension of the 16-bit integer. This sign-extended upper word allows the 16-bit integer to be read as a 32-bit integer type in logic without losing the sign of the integer. If the 16-bit integer result is negative, the upper word in the 32-bit channel data has the value 0xFFFF. If the 16-bit integer result is positive, the upper word is 0x0000.

Output Data

Module drives its channel output data in its configured output words, beginning at its assigned Channel Value Reference Address. Each channel occupies 2 words, whether or not the channel is used: Depending on its configured Channel Value Format, each enabled channel drives analog voltage/current corresponding to a 32-bit floating-point or 16-bit integer value driven by CPU.

In the 16-bit integer mode, the low word of the 32-bit channel data area contains the 16-bit integer channel value. The high word (upper 16-bits) of the 32-bit value is set with the sign extension of the 16-bit integer. This sign-extended upper word allows the 16-bit integer to be driven as a 32-bit integer type in logic without losing the sign of the integer. If the 16-bit integer result is negative, the upper word in the 32-bit channel data has the value 0xFFFF. If the 16-bit integer result is positive, the upper word is 0x0000.

12.2.10.1 Channel Diagnostic Data

In addition to the input data from field devices, the module can be configured to report channel diagnostics status data to the CPU. The CPU stores this data at the module's configured Diagnostic Reference Address. Use of this feature is optional.

The diagnostics data for each channel occupies 2 words (whether the channel is used or not):

When a diagnostic bit equals 1, the alarm or fault condition is present on the channel. When a bit equals 0 the alarm or fault condition is either not present or detection is not enabled in the configuration for that channel.

For each channel, the format of this data will be as shown in below table.

Bit	Description
0	Low Alarm
1	High Alarm
2	Under-range
3	Over-range
4	Open wire fault
5 – 15	Reserved (set to 0)
16	Low-Low Alarm
17	High-High Alarm
18	Negative Rate of Change Alarm
19	Positive Rate of Change Alarm
20	Lower Clamp
21	Upper Clamp
22 – 31	Reserved (set to 0)

12.2.11 Status Data: ALG542

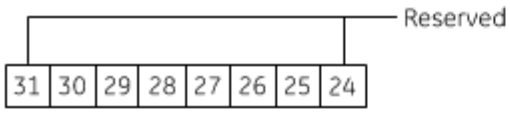

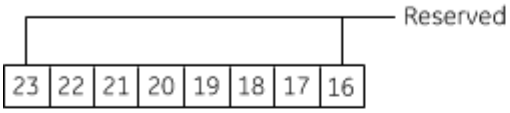

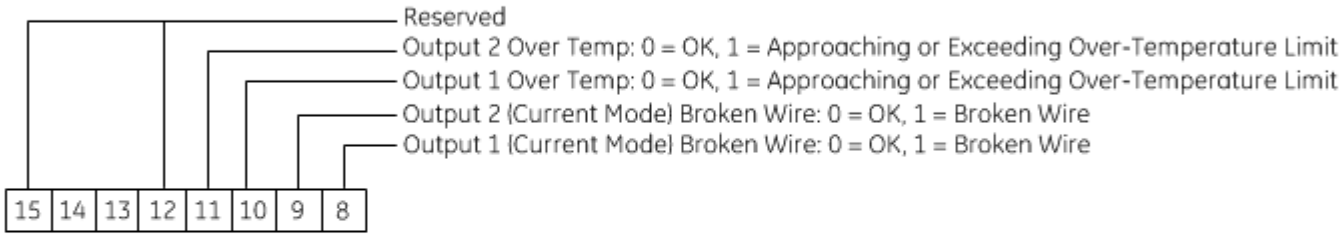

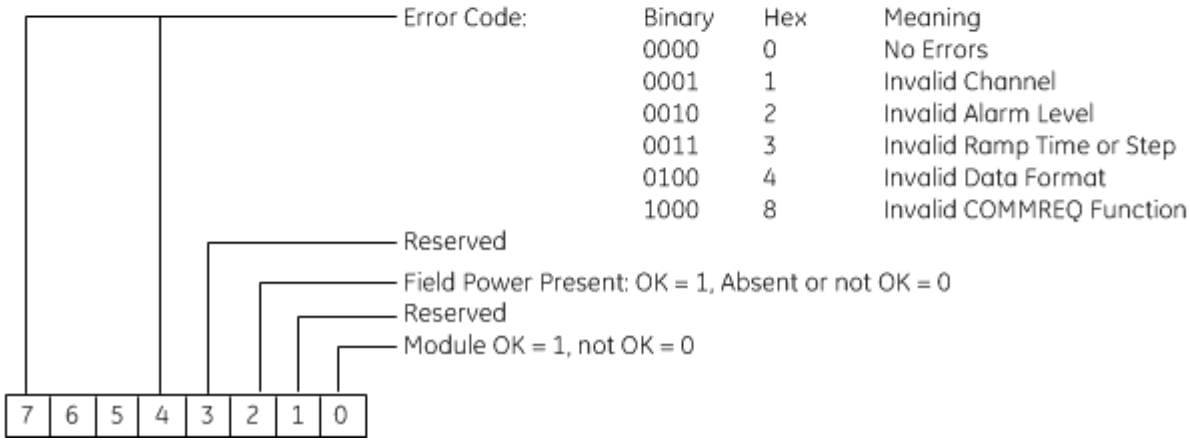

Binary	Hex	Meaning
0000	0	No Errors
0001	1	Invalid Channel
0010	2	Invalid Alarm Level
0011	3	Invalid Ramp Time or Step
0100	4	Invalid Data Format
1000	8	Invalid COMMREQ Function

12.2.12 Configuration: ALG542

The following parameters can be configured using the Machine Edition software.

Module Settings

Parameter	Choices	Description
Input Reference Address	Valid memory types: %AI (default), %AQ, %R, %W, Symbolic Memory.[84]	The starting address in memory for input data from Module.
Input Reference Length	Read-only	Each input channel provides two words of analog data to the Controller CPU.
Output Reference Address	Valid memory types: %AI (default), %AQ, %R, %W, Symbolic Memory.[84]	The starting address in memory for output data to Module.
Output Reference Length	Read-only	Each channel accepts two words of analog output data to the Controller CPU.
Diagnostic Reference Address	Valid memory types: %I (default), %Q, %G, %M, %T, Symbolic Memory.[84]	Starting address for the channel diagnostics data. Used only when Module Level Diagnostic Reporting is enabled.
Diagnostic reference Length	Read-only	The amount of memory required for the channel diagnostics data. When Module Level Diagnostic Reporting is enabled, two words (32 bits) of diagnostic data are allocated for each channel, whether or not the channel is used.
Module Status Reference Address	Valid memory types: %I (default), %Q, %G, %M, %T, Symbolic Memory.[84]	The starting address in memory for status information from Module.
Module Status Reference Length	0, 32	The number of module status bits reported to the Controller. Data format is displayed in the following figure. When set to 0, status reporting is disabled. To enable status reporting, set this parameter to a value other than 0.
I/O Scan Set	1 through 32	Assigns Module I/O status data to a scan set defined in the CPU configuration. Determines how often the RX3i polls the data
Inputs Default	Force Off (default) or Hold Last State	In the event of module failure or removal, this parameter specifies the state of all Channel Value References for Module. Force Off = Channel Values clear to 0. Hold Last State = Channels hold their last state.
Module Level Diagnostic Reporting	Disabled (default) or Enabled	If enabled, 32 bits of data are allocated for each active channel. Diagnostic Reporting and Fault Reporting can be enabled separately for each channel.

[84] *To use this feature "Variable Mode" property must be enabled in PAC Machine Edition.*

Output Channel Configuration Parameters ALG542

Parameter	Choices	Description
Range Type	Disabled (default), Voltage/Current	Enables/disables the output channel.
Range	0 to +10 V (default), -10 to +10 V, 4 to 20 mA, 0 to 20 mA	Selects the analog output type.
Channel Value Format	32-Bit Floating-point (default) 16-Bit Integer	32-Bit Floating-point: A real value, range 3.40282e+38 through 3.40282e+38 16-Bit Integer: The low word of the 32-bit channel data contains the 16-bit integer channel value. The high word is ignored. It is possible for the application program to write 32-bit signed decimal values to the output reference. However, the program logic must restrict the magnitude of the value to the range +32767 to -32768. Exceeding this range results in misinterpretation of the sign bit and incorrect output channel operation.
Outputs Default	Force to Default Value (default) Hold Last State	Determines how the output channel operates when one of the following events occurs: The CPU transitions to Stop Disabled mode. The CPU transitions to Run Disabled mode. There is a loss of backplane power fault. There is a non-recoverable module fault for this module. There is a critical CPU fault. The configuration is cleared. Force To Default Value: When an event listed above occurs, Module sets the channel output to the Default Value set for the channel. The channel output remains set to the default value until the CPU completes a successful reconfiguration of the outputs. If the Default Ramp Rate is set to a value other than 0, the channel ramps to the default value. Hold Last State: When one of the listed events occurs, Module retains the last successful configured state on its outputs until the CPU completes a successful reconfiguration of the outputs.
High Scale Value (Eng Units)	The defaults and ranges for the four scaling parameters depend on the configured Range and Channel Value Format.	Scaling is disabled if: High Scale Eng. Units = High Scale A/D Units and Low Scale Eng. Units = Low Scale A/D Units. Default is High A/D Limit of selected range type. When Channel Value Format is set to 32-Bit Floating-point, range is -3.40282e+38 through 3.40282e+38. When set to 16-Bit Integer, range -32,768 through +32,767.
Low Scale Value (Eng Units)		
High Scale Value (A/D Units)		
Low Scale Value (A/D Units)		

Parameter	Choices	Description
High Alarm (Eng Units) Low Alarm (Eng Units)	The defaults and ranges for these parameters depend on the configured Range and Channel Value Format.	The alarm parameters are specified in Engineering Units. To use alarming, Diagnostic Reporting or Fault Reporting must be enabled. High Alarm: When the channel value reaches or exceeds this value, a High Alarm is triggered. Low Alarm: When the channel value reaches or goes below this value, a Low Alarm is triggered.
Outputs Enabled Ramp Rate (Eng Units/ms)	Valid range: 0.0, or Lower Limit: (High Scale Eng Units -Low Scale Eng Units) / 60,000 through High Scale Eng Units	The maximum rate at which the output will change during normal operation (outputs are enabled and no fault conditions exist). A value of 0 disables ramping.
Default Ramp Range (Eng Units/ms)	Valid range: 0.0, or Lower Limit: (High Scale Eng Units -Low Scale Eng Units) / 60,000 through High Scale Eng Units	The maximum rate at which the output will change if the Outputs Default parameter is set to Force to Default and one or more of the events defined for Force to Default occurs. A value of 0 disables ramping.
Output Clamping Enable	Disabled (default), Enabled	Disabled: The Upper Clamp Limit is set to the same value as the High Scale Value. The Lower Clamp Limit is set to the same value as the Low Scale Value. Enabled: You can select the values for Upper Clamp Limit and Lower Clamp Limit.
Upper Clamp Limit (Eng Units)	Valid range: 0.0, or Lc+ through Heu+, where Lc+ is a value greater than the Lower Clamp Limit, and Heu+ is a calculated value slightly greater than the High Scale Value (Eng Units). Default: Heu+.	Enabled when Output Clamping is Enabled. The highest value to which the output can be set. If the commanded value exceeds the upper clamp limit, the output is set to the upper clamp limit and an Upper Clamp condition occurs: an alarm is issued if the Upper Clamp Alarm Enable parameter is set to Enabled under Diagnostic Reporting Enable and/or Fault Reporting Enable. If Output Clamping Enable is set to Disabled, the Upper Clamp Limit is set to the same value as the High Scale Value (Eng Units). Note: If you change the High Scale Value (Eng Units), the Upper Clamp Limit is not automatically updated. To update it automatically to Heu+, set the Output Clamping Enable parameter to Disabled and then set it to Enabled. This also sets the value of the Lower Clamp Limit to its default.

Parameter	Choices	Description
Lower Clamp Limit (Eng Units)	Valid range: 0.0, or Leu- through Hc-, where Leu is a calculated value slightly lower than the Low Scale Value (Eng Units), and Hc- is a value lower than the Upper Clamp Limit (Eng Units). Default: Leu-.	Enabled when Output Clamping is Enabled. The lowest value to which the output can be set. If the commanded value exceeds the lower clamp limit, the output is set to the lower clamp limit and a Lower Clamp condition occurs: an alarm is issued if the Lower Clamp Alarm Enable parameter is set to Enabled under Diagnostic Reporting Enable and/or Fault Reporting Enable. If Output Clamping Enable is set to Disabled, the Lower Clamp Limit is set to the same value as the Low Scale Value (Eng Units). Note: If you change the Low Scale Value (Eng Units), the Lower Clamp Limit is not automatically updated. To update it automatically to Leu-, set the Output Clamping Enable parameter to Disabled and then set it to Enabled. This also sets the value of the Upper Clamp Limit to its default.
Default Value (Eng Units)	Valid range: 0.000 - 10.500 Default: -10 to +10 V: 0.0 Other ranges: Lowest value of configured Range.	If the Outputs Default parameter is set to Force to Default Value the channel will be set to this value if one or more of the events defined for Force to Default Value occurs.
User Offset	16-Bit Integer range: -32768 to 32768 32-Bit Floating-point, range: -3.40282e+38 through 3.40282e+38. 0.0 (default)	Engineering Units offset to change the base of the channel. This value is added to the scaled value on the channel prior to alarm checking.
Diagnostic Reporting Enable	Disabled (default) or Enabled (Available only if Module Level Diagnostic Reporting is enabled on the Settings tab.)	If Diagnostic Reporting is enabled, Module reports channel alarms in the Diagnostic Reference memory. Channel alarms can be individually enabled.
Fault Reporting Enable		If Fault Reporting is enabled, Module logs a fault log in the I/O Fault table for each occurrence of a channel alarm. Fault reporting for channel alarms can be individually enabled.

Input Channel Configuration Parameters ALG542

Parameter	Choices	Description
Range Type	Disabled (default), Voltage/Current	Enables/disables the output channel.
Input Range	Disabled (default) 0 to +10 V, -10 to +10 V, 4 to 20 mA, 0 to 20 mA, 4 to 20 mA Enhanced	Selects the analog input type.
Channel Value Format	32-Bit Floating-point (default) 16-Bit Integer	32-Bit Floating-point: A real value, range 3.40282e+38 through 3.40282e+38 16-Bit Integer: The low word of the 32-bit channel data contains the 16-bit integer channel value. The high word is ignored. It is possible for the application program to write 32-bit signed decimal values to the output reference. However, the program logic must restrict the magnitude of the value to the range +32767 to -32768. Exceeding this range results in misinterpretation of the sign bit and incorrect output channel operation.
High Scale Value (Eng Units)	The defaults and ranges for the four scaling parameters depend on the configured Range and Channel Value Format.	Scaling is disabled if: High Scale Eng. Units = High Scale A/D Units and Low Scale Eng. Units = Low Scale A/D Units. Default is High A/D Limit of selected range type. When *Channel Value Format* is set to 32-Bit Floating-point, range is -3.40282e+38 through 3.40282e+38. When set to 16-Bit Integer, range -32,768 through +32,767.
Low Scale Value (Eng Units)		
High Scale Value (A/D Units)		
Low Scale Value (A/D Units)		
Positive Rate of Change Limit (Eng Units/Sec)	Range: 0.0 (default) through 3.40282e+38	Rate of change in Engineering Units per Second that will trigger a Positive Rate of Change alarm. If set to 0, limit is disabled. Used with “Rate of Change Sampling Rate” parameter.
Negative Rate of Change Limit (Eng Units/Sec)	Range: 0.0 (default) through 3.40282e+38	Rate of change in Engineering Units per Second that will trigger a Negative Rate of Change alarm. If set to 0, limit is disabled. Used with “Rate of Change Sampling Rate” parameter.

Parameter	Choices	Description
Rate of Change Sampling Rate (Seconds)	0.06 (default) through 300.0	Time from 0.06 through 300 seconds to wait between comparisons. If set to 0.0, Module checks after every 0.06 second input sample. ***Note:*** Module will start the Rate of Change detection 100ms after switching CPU to RUN mode or module field power is cycled. This is to ignore any glitches in the input signal.
High-High Alarm (Eng Units)	The defaults and ranges for these parameters depend on the configured Range and Channel Value Format.	Alarms and Deadbands All of the alarm parameters are specified in Engineering Units. To use alarming, Diagnostic Reporting or Fault Reporting must be enabled. High-High Alarm and Low-Low Alarm: When the configured value is reached or passed, a Low-Low Alarm or High-High Alarm is triggered. The configured values must be lower than/higher than the corresponding low/high alarm limits. High Alarm and Low Alarm: When the configured value is reached or below (above), a Low (High) Alarm is triggered. High and Low Alarm Deadbands: A range in Engineering Units above the alarm condition (low deadband) or below the alarm condition (high deadband) where the alarm status bit can remain set even after the alarm condition goes away. For the alarm status to clear, the channel input must fall outside the deadband range. Alarm Deadbands should not cause the alarm clear condition to be outside the Engineering Unit User Limits range. For example, if the engineering unit range for a channel is -1000.0 to +1000.0 and a High Alarm is set at +100.0, the High Alarm Deadband value range is 0.0 to less than 1100.0. A deadband of 1100.0 or more would put the High Alarm clear condition below –1000.0 units making the alarm impossible to clear within the limits.
High Alarm (Eng Units)		
Low Alarm (Eng Units)		
Low-Low Alarm (Eng Units)		
High-High Alarm Deadband (Eng Units)		
High Alarm Deadband (Eng Units)		
Low Alarm Deadband (Eng Units)		
Low-Low Alarm Deadband (Eng Units)		
User Offset	16-Bit Integer range: -32768 through 32768 32-Bit Floating-point range: -3.40282e+38 through 3.40282e+38. 0.0 (default)	Engineering Units offset to change the base of the input channel. This value is added to the scaled value on the channel prior to alarm checking.
Software Filtering	Disabled (default) or Enabled	Controls whether software filtering will be performed on the inputs.

Parameter	Choices	Description
Integration Time (ms)	0 (default) through 4294967295 ms	Specifies the amount of time in milliseconds for the software filter to reach 63.2% of the input value. A value of 0 indicates software filter is disabled. A value of 100 indicates data will achieve 63.2% of its value in 100ms.
Diagnostic Reporting Enable	Disabled (default) or Enabled (Available only if Module Level Diagnostic Reporting is enabled on the Settings tab.)	If Diagnostic Reporting is enabled, Module reports channel alarms in the Diagnostic Reference memory. Channel alarms can be individually enabled.
Fault Reporting Enable		If Fault Reporting is enabled, Module logs a fault log in the I/O Fault table for each occurrence of a channel alarm. Fault reporting for channel alarms can be individually enabled.

Outputs Default Notes

- Hot Removal of the module without removing the Field Terminal Block in an I/O Enabled mode will result in an undefined output. The outputs shall be forced to default by first turning off field power and removing the Terminal Block of this module before hot-removing Module.
- Resetting Module using SVC_REQ 24 causes all channels to Hold Last State even if Default Value is configured. The application program must handle output defaulting before execution of the Service Request.
- Default Ramp Rate configuration is ignored if backplane power from the power supply is lost. Channels configured for Default Value go to the default value immediately.
- The first time a configuration is stored following a return of backplane power, the Default Ramp rate is not used. Any channel configured for Default Value goes to its default value immediately. If analog power was not lost and the same configuration is restored on the next power-up, the channel state is unchanged from the time the power was lost. The Default Ramp Rate is used for any subsequent reconfiguration.
- The operation of clear command is undefined when module "*Outputs Default*" parameter is configured for "*Force To Default Value*" and CPU is in Stop Enabled mode. For the outputs to stay in Hold Last state, place the CPU in Stop D**is**abled mode before sending a clear command.

Output Default Conditions and Actions

Condition	Hold Last State or Default Value	Default Ramp Rate Enabled	Outputs Enabled and Ramp Rate Enabled	Channel Output Setting (Except where indicated, field power is assumed to be present).
Outputs Enabled and No Faults	N/A	N/A	No	Output goes to its commanded value from reference memory; defaults don't apply.
	N/A	N/A	Yes	Output is ramped to the commanded output from reference memory at the Outputs Enabled ramp rate. Defaults don't apply.
Outputs Disabled, Fault Mode, or Reconfiguration	Default Value	No	N/A	Output is set to the Default Value
	Default Value	Yes	N/A	Output is ramped to the Default Value at the Default ramp rate, starting at the last commanded value before entering mode.
	Hold Last State	N/A	N/A	Output is held at the last commanded value
Loss of Backplane Power or First Configuration Store after Power-up	Default Value	N/A	N/A	Output is set to the Default Value.
	Hold Last State	N/A	N/A	Output is held at last commanded value.
Reset with SVCREQ 24 or Cleared Configuration	N/A	N/A	N/A	Output is held at last commanded value.
Loss of Field Power	N/A	N/A	N/A	All outputs go to 0V and 0mA.

12.2.13 Rate of Change Alarms: ALG542

The ALG542 can detect both Negative Rate of Change and Positive Rate of Change in Engineering Units per Second. When either of the Rate of Change parameters is configured to be non-zero, Module takes the difference in Engineering Units between the previous sample and the current sample, then divides by the elapsed time between samples.

If the Engineering Unit change from the previous sample to current sample is negative, Module compares the rate change with the *Negative Rate of Change* parameter.

If the Engineering Unit change between samples is positive, Module compares the rate change with the *Positive Rate of Change* parameter value.

In either case, if the rate of change is greater than the configured rate, a rate of change alarm occurs. The actions taken by Module following the alarm depend on the enabled rate of change actions that have been set up in the *Diagnostic Reporting Enable* and *Fault Reporting Enable* parameters.

The Rate of Change Sampling Rate parameter determines how frequently Module compares the Rate of Change. The minimum value which can be used with this parameter is 60 ms i.e., Module can compare the rate of change after every 60 ms.

When the CPU transitions to RUN mode or Module field power is cycled, the ALG542 waits 100 ms before starting Rate of Change detection. This is to ignore any glitches in the input signal.

12.2.14 Ramp Mode Operation: ALG542

In ALG542, the output channels can be set up to operate in Ramp mode. In this mode, the output goes to the new value over a period of time, instead of changing directly to the new value (Standard Mode). The output channel starts a new ramp (either up or down) each time the value in its %AQ reference changes.

In normal operating mode, the ramp operation of any given output channel is defined by the channel configuration parameter *Outputs Enabled Ramp Rate (Eng Units / ms)*. A value of zero indicates that the ramp operation is disabled and the respective output channel operates in Standard mode.

Figure 357: Ramp Mode Example ALG542

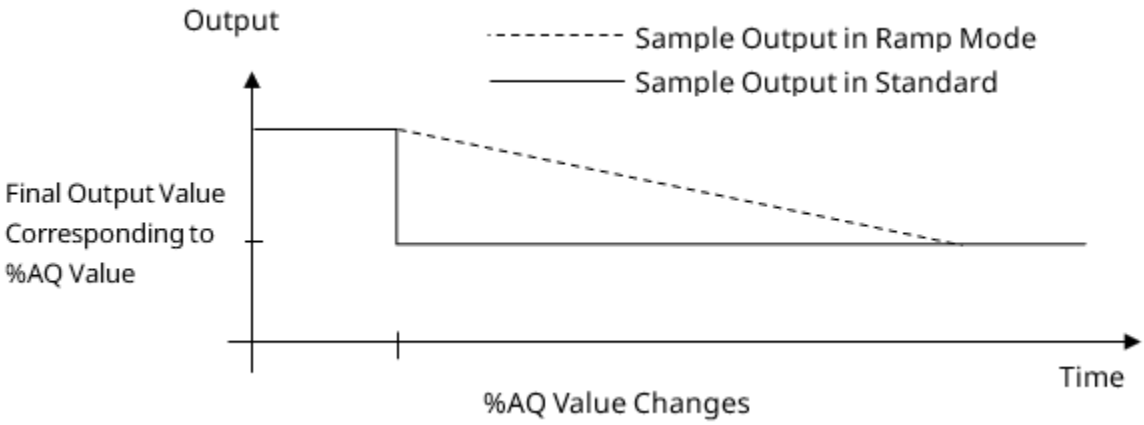

An output channel can also be set up to operate in Ramp mode using COMMREQ command. The ramp slope can be set up in the COMMREQ as:

1. Ramp Time Mode: A total ramp time from 1 millisecond to 32 seconds.

2. Ramp Step Mode: A step size of 1 to 32000 counts in every millisecond.

A channel stays in any one of the above modes until Module receives a new COMMREQ either changing or canceling the ramp operation, or until power is cycled. In this case the value of channel configuration parameter *Outputs Enabled Ramp Rate (Eng Units/ms)* is overridden by the

data sent along with the command. The output channel will not change modes even after re-loading the hardware configuration.

After canceling the ramp operation using a new COMMREQ the value of channel configuration parameter *Outputs Enabled Ramp Rate (Eng Units/ms)* is restored and the ramp operation is enabled / disabled accordingly.

If Module receives a new COMMREQ that changes ramp operation while an output is in the process of ramping, the new ramp settings take effect as follows:

1. If Ramp mode is turned off during a ramp, the channel goes directly to the value in its %AQ reference.
2. If a channel is set up to ramp over a period of time, but a new COMMREQ is received commanding the channel to instead ramp in a sequence of measured steps, ramp operation changes as soon as the COMMREQ is processed (assuming that the step is valid).
3. If a channel is set up to ramp as a sequence of measured steps, but a new COMMREQ is received commanding the channel to instead ramp over a period of time, it immediately starts a new ramp using the present output as the starting output and the present time as the start time.

If Module receives a command for an invalid channel, step height or ramp time, Module ignores the command and returns an error code in its %I status references. The error code can be cleared by a Clear Errors COMMREQ or by reconfiguring Module.

12.2.15 Clamp Mode Operation: ALG542

Output Channel Clamping Enable Upper Clamp Limit (Eng Units)

Available when Output Clamping Enable is set to Enabled. This permits the user to define the uppermost value to which the output can be set. If the commanded value exceeds the upper clamp limit, the output is set to the upper clamp limit and an Upper Clamp condition occurs: an alarm is issued if the Upper Clamp Alarm Enable parameter is set to Enabled under Diagnostic Reporting Enable and/or Fault Reporting Enable and/or Interrupts Enable.

User can use the upper clamp to restrict the maximum output to a value lower than its configured Range Type.

For example, a -10 to +10 Vdc channel can be restricted to -10 to +8.5 Vdc.

The Upper Clamp Limit also provides an output over range capability.

If Output Clamping Enable is set to Disabled, the Upper Clamp Limit is set to the same value as the High Scale Value (Eng Units).

Valid range: Lc+ through Heu+, where Lc+ is a value greater than the Lower Clamp Limit, and Heu+ is a calculated value slightly greater than the High Scale Value (Eng Units).

Default: Heu+. If you change the High Scale Value (Eng Units), the Upper Clamp Limit is not automatically updated. To update it automatically to Heu+, set the Output Clamping Enable parameter to Disabled and then set it to Enabled. This also sets the value of the Lower Clamp Limit to its default.

Output Channel Clamping Enable Lower Clamp Limit (Eng Units)

Available when Output Clamping Enable is enabled. This permits the user to define the lowest value to which the output can be driven. If the commanded value exceeds the lower clamp limit, the output is set to the lower clamp limit and a Lower Clamp condition occurs: an alarm is issued if the Lower Clamp Alarm Enable parameter is set to Enabled under Diagnostic Reporting Enable and/or Fault Reporting Enable and/or Interrupts Enable.

User can use the lower clamp to restrict the minimum output to a value higher than its configured Range Type. For example, a -10 to +10 Vdc channel can be restricted to -7.5 to +10 Vdc.

The Lower Clamp Limit also provides an output under range capability.

If Output Clamping Enable is set to Disabled, the Lower Clamp Limit is set to the same value as the Low Scale Value (Eng Units).

Valid range: Leu- through Uc-, where Leu is a calculated value slightly lower than the Low Scale Value (Eng Units), and Uc- is a value lower than the Upper Clamp Limit (Eng Units).

Default: Leu-. If you change the Low Scale Value (Eng Units), the Lower Clamp Limit is not automatically updated. To update it automatically to Leu-, set the Output Clamping Enable parameter to Disabled and then set it to Enabled. This also sets the value of the Upper Clamp Limit to its default.

12.2.16 Changing Module Operation on Command: ALG542

Module ALG542 can respond directly to a specific COMMREQ (Communication Request) command from the application program to:

1. Clear %I error code for Module.
2. Modify the Input alarm limits, and.
3. Put one or both outputs in Ramp mode and set up the ramp characteristics.

These changes to module are not retained during loss of power. If Module is power-cycled, new commands must be sent to Module to

again modify the configured alarm limits, or to set up Ramp operation for the outputs.

COMMREQ Command Block

The format of the COMMREQ for module ALG542 is displayed in the following figure. The COMMREQ Command Block specifies a memory type and location to receive status information about the execution of the command (word 3), and for the command data (word 9). For more information about using COMMREQs, refer to the online help and the *PACSystems RX3i and RSTi-EP CPU Reference Manual,* GFK-2222.

Word Offset	Value	Description
Word 1	Must be 0004	Length of the command block
Word 2	0000	Not used.
Word 3	Refer to GFK-2222.	Memory type of COMMREQ status word
Word 4	0-based	Offset of COMMREQ status word
Word 5	0	Reserved
Word 6	0	Reserved
Word 7	E201 hex (-7679 decimal)	COMMREQ command number
Word 8	0008	Byte length of command data
Word 9	Refer to GFK-2222	Memory type in the CPU for the Command Data
Word 10	0-based	Memory offset for the command data.

COMMREQ Command Data Format

In the COMMREQ Command Block (above) words 9 and 10 assign a CPU memory location for eight bytes of command data. The program logic can use these bytes to set the parameters of the COMMREQ.

1. Word 1 - Command Word
2. Word 2 - Channel Value Format (0000 - 16-Bit Integer / 0001 - 32-Bit Float).
3. Word 3 & 4 - Alarm or Ramp data.

Command to be Performed	Word 1 (hex)	Word 2	Contents of Word 3 & 4
Change the low alarm limit of the specified input / output channel to the value in words 3 & 4.	0000 (Input 1) 0001 (Input 2) 0002 (Input 3) 0003 (Input 4) 0004 (Output 1) 0005 (Output 2)	32-Bit Float / 16-Bit Integer	New low alarm limit for the input / output.
Change the high alarm limit of the specified input / output channel to the value in words 3 & 4.	0010 (Input 1) 0011 (Input 2) 0012 (Input 3) 0013 (Input 4) 0014 (Output 1) 0015 (Output 2)	32-Bit Float / 16-Bit Integer	New high alarm limit for the input / output.
Change the low-low alarm limit of the specified input channel to the value in words 3 & 4.	0100 (Input 1) 0101 (Input 2) 0102 (Input 3) 0103 (Input 4)	32-Bit Float / 16-Bit Integer	New low-low alarm limit for the input.
Change the high-high alarm limit of the specified input channel to the value in words 3 & 4.	0110 (Input 1) 0111 (Input 2) 0112 (Input 3) 0113 (Input 4)	32-Bit Float / 16-Bit Integer	New high-high alarm limit for the input.
Change the low alarm dead band limit of the specified input channel to the value in words 3 & 4.	0200 (Input 1) 0201 (Input 2) 0202 (Input 3) 0203 (Input 4)	32-Bit Float / 16-Bit Integer	New low alarm dead band limit for the input.
Change the high alarm dead band limit of the specified input channel to the value in words 3 & 4.	0210 (Input 1) 0211 (Input 2) 0212 (Input 3) 0213 (Input 4)	32-Bit Float / 16-Bit Integer	New high alarm dead band limit for the input.
Change the low-low alarm dead band limit of the specified input channel to the value in words 3 & 4.	0300 (Input 1) 0301 (Input 2) 0302 (Input 3) 0303 (Input 4)	32-Bit Float / 16-Bit Integer	New low-low alarm dead band limit for the input.

Command to be Performed	Word 1 (hex)	Word 2	Contents of Word 3 & 4
Change the high-high alarm dead band limit of the specified input channel to the value in words 3 & 4.	0310 (Input 1) 0311 (Input 2) 0312 (Input 3) 0313 (Input 4)	32-Bit Float / 16-Bit Integer	New high-high alarm dead band limit for the input.
Change the low alarm limit of the specified input/output channel by the increment in words 3 & 4.	0020 (Input 1) 0021 (Input 2) 0022 (Input 3) 0023 (Input 4) 0024 (Output 1) 0025 (Output 2)	32-Bit Float / 16-Bit Integer	Increment used to change the input/output configured low alarm limit. Increment can be + or -.
Change the high alarm limit of the specified input / output channel by the increment in words 3 & 4.	0030 (Input 1) 0031 (Input 2) 0032 (Input 3) 0033 (Input 4) 0034 (Output 1) 0035 (Output 2)	32-Bit Float / 16-Bit Integer	Increment used to change the input/output configured high alarm limit. Increment can be + or -.
Turn off Ramp operation for the specified output channel and put it in normal mode.[85]	0040 (Output 1) 0041 (Output 2)	--	
Put the specified output channel in Ramp step mode. Step increment in word 3 & 4.[85]	0050 (Output 1) 0051 (Output 2)	32-Bit Float	Step to be taken (in Eng Units / ms).
Put the specified output channel in Ramp time mode. Ramp total time in word 3 & 4.[85]	0060 (Output 1) 0061 (Output 2)	16-Bit Integer	Time in milliseconds: 1 to 32000 (1 ms to 32 seconds)
Clear Module %I error code	00C0	--	

If the requested command is not valid (for example, if the changed alarm limit would be out of range or the specified data format in word 2 does not match with the data format used by the channel configuration) Module ignores the COMMREQ command and returns an error code in the %I status data for Module. Module does ***not*** stop operating; these error bits are informational only and can be ignored. The error code remains in the %I status bits until cleared by another COMMREQ (command 00C0, refer to directly above), or until Module is reconfigured.

[85] *These commands do not modify the configuration parameter Outputs Enabled Ramp Rate of the specified output channel of ALG542.*

COMMREQ Error Code

The first byte of the ALG542 module status data contains a status/error code for COMMREQs sent to Module. Only the most recent error is reported; an existing error code will be overwritten if another error occurs. Following is the list of supported error codes:

Error Code	Description
0	No Error.
1	Invalid channel.
2	Invalid alarm level.
3	Invalid ramp time or step.
4	Invalid data format.
8	Invalid COMMREQ function.

The priority of errors is:

1. Invalid COMMREQ function (highest priority).
2. Invalid channel.
3. Invalid data format.
4. Invalid data (ramp or alarm parameter) (lowest priority).

If multiple errors occur, the one with the highest priority is reported in the error code. Module will not stop standard operation if an error is detected; these error bits are informational only, and can be ignored.

Section 13: Universal Analog Input Module

This chapter describes the following Analog module for PACSystems RX3i controllers.

Universal Analog Input Module Description	Catalog Number	Section
Universal Analog Input: Voltage, Current, Resistance, RTD, Thermocouple; 8-Channel	IC695ALG600	13.1

13.1 Universal Analog Input: Voltage, Current, Resistance, RTD, Thermocouple, 8-Channel + 2 CJC: IC695ALG600

Figure 358: IC695ALG600

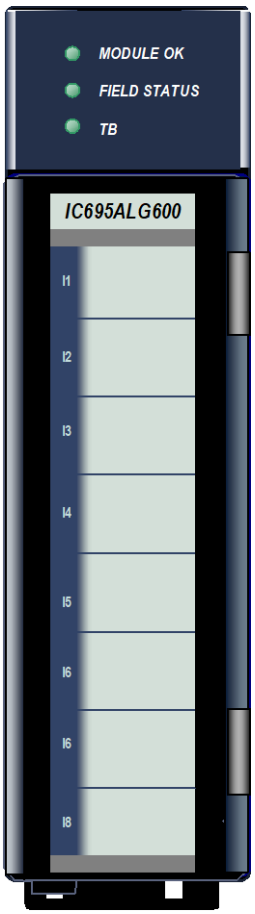

Universal Analog Input module, IC695ALG600, provides eight general purpose input channels and two Cold Junction Compensation (CJC) channels. Inputs are divided into two equal groups of four. Channels can be individually-configured using the Machine Edition software for:

- Any combination of up to 8 channels of voltage, current, thermocouple, RTD, and resistance inputs.
- Thermocouple Inputs: B, C, E, J, K, N, R, S, T
- RTD Inputs: PT 385 / 3916, N 618 / 672, NiFe 518, CU 426
- Resistance Inputs: 0 to 250/500/1000/2000/3000/4000Ω
- Current: 0–20 mA, 4–20 mA, ±20 mA
- Voltage: ±50 mV, ±150 mV, 0–5 V, 1–5 V, 0–10 Vdc, ±10 Vdc

This module must be located in an RX3i Universal Backplane. It cannot be located in an expansion or remote backplane.

13.2 Features

- Completely software-configurable, no module jumpers to set
- Six hardware analog-to-digital filter frequencies, individually-selectable by channel
- Rapid channel acquisition times based on filter frequency
- Full auto-calibration
- On-board error-checking
- Open-circuit detection for most input types
- Short-circuit detection for RTDs.
- User-defined scaling
- High alarm, low alarm, high-high alarm, low-low alarm detection and reporting
- Module fault reporting
- Supports diagnostic point fault contacts in the logic program.
- Flash memory for future upgrades
- Module Status, Field Status, and TB LEDs
- CJC compensation on terminal block
- Temperature in Celsius or Fahrenheit
- Positive and negative Rate of Change Alarms
- Configurable software filters for each input channel
- Configurable interrupts for channel alarms and faults
- Terminal Block insertion or removal detection
- Module supports insertion into and removal from an RX3i Universal Backplane which is under power. Refer to Section 2.6.4, *Hot Insertion and Removal*.

Module supports firmware upgrades using the WinLoader software utility (if the host CPU has a serial port) or using a Web-based tool (if the host CPU has no serial port). Instructions are included with the firmware upgrade kit.[25]

13.3 LEDs: ALG600

Module **OK** LED indicates module status. The **Field Status** LED indicates the presence of a fault on at least one channel or a terminal block error. The **TB** (Terminal Block) LED indicates the presence or absence of the terminal block. LEDs are powered from the backplane power bus.

LED	Indication	Meaning
Module OK	ON Green	Module OK and configured.
	Slow Blinking Green	Module OK but not configured.
	Quick Blinking Green	Module starting up, waiting for CPU-to-module communication to be established.
	Blinking Amber	Internal Module Failure. (Count the number of blinks for a two-digit blink code.)
	OFF	Module is defective or no backplane power present
Field Status	ON Green	No faults on any enabled channel, and Terminal Block is present.
	ON Yellow	Fault on at least one channel.
	OFF	Terminal block not present or not fully seated.
TB	ON Red	Terminal block not present or not fully seated.
	ON Green	Terminal block is present.
	OFF	No backplane power to module.

13.4 Specifications: ALG600

Specification	Description	
Backplane Power Requirements	For IC695ALG600-DD and earlier: 400 mA maximum at 5 Vdc; 350 mA maximum at 3.3 Vdc	
	For IC695ALG600-EE and later: 190 mA maximum at 5 Vdc; 250 mA maximum at 3.3 Vdc	
CPU Memory Usage	40 bytes (20 words) of input references for channel input data. 40 bytes for enhanced diagnostics 4 bytes for module status reporting.	
Power Dissipation within Module	5.4 W maximum	
LEDs	One bi-color green/amber LED to indicate Module status One bi-color green/yellow LED to indicate the field status One bi-color red/green LED to indicate the terminal block status	
Channel Acquisition Time	10 ms at 1000 Hz, 13 ms at 200 Hz, 27 ms at 40 Hz, 67 ms at 16 Hz, 87 ms at 12 Hz, 127 ms at 8 Hz	
Channel Update Time	The sum of the channel acquisition times for a bank of 4 channels plus one of the following, if applicable: RTD Lead resistance measurement time (= channel acquisition time) CJC acquisition time 7 ms.	
Input resolution	11 to 16 bits, depending on configured range and A/D filter frequency.	
Inputs in Ω	Resistance	0-250, 0-500, 0-1000, 0-2000, 0-3000, 0-4000
	Platinum 385	100, 200, 500,1000
	Platinum 3916	100, 200, 500,1000
	Nickel 672	120
	Nickel 618	100,200, 500,1000
	Nickel-Iron 518	604
	Copper 426	10
RTD Inputs	Copper 426	-100 to 260 °C
	Nickel 618	-100 to 260 °C
	Nickel 672	-80 to 260 °C
	Nickel-Iron 518	-100 to 200 °C
	Platinum 385	-200 to 850 °C
	Platinum 3916	-200 to 630 °C
Thermocouple Inputs	Type B	300 to 1820 °C
	Type C	0 to 2315 °C
	Type E	-270 to 1000 °C
	Type J	-210 to 1200 °C
	Type K	-270 to 1372 °C
	Type N	-210 to 1300 °C

Specification	Description	
	Type R	0 to 1768 °C
	Type S	0 to 1768 °C
	Type T	-270 to 400 °C
Voltage / Current Inputs	-10 to +10 Vdc, 0 to +10 Vdc, 0 to +5 Vdc, 1 to +5 Vdc, -50 to +50 mV, -150 to +150 mV, -20 to +20 mA, 4 to 20 mA, 0 to 20 mA	
Configurable Input Filter	8 Hz, 12 Hz, 16 Hz, 40 Hz, 200 Hz, 1000 Hz	
Scaling	Floating-point user scaling.	
Max RTD Cable Impedance	25 Ω	
RTD Wire Length	1000 ft max w/settling time of 1 ms	
Input Impedance	>1M Ω for Tc/V/RTD	
Current Input Resistance	249 Ω ±1%	
Open circuit detection time	5 seconds max. Open circuit detection is available for all configurations except ±20 mA current, 0-20 mA current, and ±10 Vdc voltage.	
Max Overvoltage	±14.5 Vdc continuous	
Max Overcurrent	28 mA continuous	
Normal Mode Noise Rejection	95 dB minimum at 50/60 Hz with 8 Hz filter 85 dB minimum at 50/60 Hz with 12 Hz filter	
Common Mode Noise Rejection	120 dB minimum at 50/60 Hz with 8 Hz filter 110 dB minimum at 50/60 Hz with 12 Hz filter	
Settling time to 5% of Full Scale (notch filter dependent)	<80 mS	
Calibration Viability	Factory calibration is valid for 12 months for all ranges and operating conditions.	
Input Offset Drift with Temperature	3.0 mΩ/°C maximum 2.0 µV/°C maximum	
Gain Drift with Temperature	50 ppm/°C typical (90 ppm/°C maximum)	
Module Scan Time (notch filter dependent)	(Assumes 2 ADCs running in parallel, no CJC or lead resistance) 10 ms per Channel * 4 Channels = 40 ms (1 KHz filter) 127 ms per Channel * 4 Channels = 508 ms (8 Hz filter) Channels that are disabled are not scanned, shortening scan time.	
Module conversion method	Sigma-delta	
Isolation Voltage channel to channel group to group terminal block to backplane/chassis	Opto-isolated, transformer isolated ±12.5 Vdc channel to channel Tc/V/I/RTD 250 Vac continuous/1500 Vac for 60 seconds 250 Vac continuous/1500 Vac for 60 seconds	

13.4.1 Typical Accuracy Specifications

Typical Error at:		**+25°C**			**0°C to +60°C**		
Configured Input Filter		***8, 12, 16 Hz***	***200 Hz***	***1000 Hz***	***8, 12, 16 Hz***	***200 Hz***	***1000 Hz***
Voltage Inputs[86]	± 10.5 V, 0.0 to +10.5 V	± 5 mV	± 5.5 mV	+/- 7 mv	± 10 mV	± 11 mV	+/-13.7 mv
	0 to +5.25 V, +1.0 to +5.25 V	± 3 mV	± 3.3 mV	+/-5 mv	± 5 mV	± 5.5 mV	+/-7 mv
	± 155 mV	± 30 µV	± 33 µV	+/-62 uV	± 110 µV	± 121 µV	+/-160 uV
	± 55 mV	± 15 µV	± 17 µV	+/-24.4 uV	± 70 µV	± 77 µV	+/-120 uV
Current Inputs[86]	± 22.5 mA, 0.0 to +22.5 mA, +3.0 to +22.5 mA	± 20 µA	± 22 µA	+/-24.5 uA	± 40 µA	± 44 µA	+-50.5 uA
Thermocouple Inputs[86]	Type J (-180°C to +1200°C)	± 0.6°C	± 0.7°C	±1.4°C	± 2.3°C	± 2.6°C	±3.1°C
	Type J (-210°C to -180°C)	± 0.8°C	± 0.9°C	±1.32°C	± 3.3°C	± 3.7°C	±4.1°C
	Type N (-160°C to +1300°C)	± 1.0°C	± 1.1°C	±1.30°C	± 4.5°C	± 5.0°C	±1.59°C
	Type N (-210°C to -160°C)	± 1.8°C	± 2.0°C	±2.35°C	± 8.0°C	± 8.8°C	±9.9°C
	Type T (-190°C to +400°C)	± 0.9°C	± 1.0°C	±1.8°C	± 4.0°C	± 4.4°C	±5°C
	Type T (-270°C to -190°C)	± 6.7°C	± 7.4°C	±8.3°C	± 18.0°C	± 19.8°C	±20.9°C
	Type K (-200°C to +1372°C)	± 1.0°C	± 1.1°C	±1.3°C	± 4.0°C	± 4.4°C	±5°C
	Type K (-270°C to -200°C)	± 9.5°C	± 10.5°C	±11.9°C	± 21.0°C	± 23.1°C	±25.5°C
	Type E (-200°C to +1000°C)	± 0.6°C	± 0.7°C	±1.4°C	± 2.5°C	± 2.8°C	±4.1°C
	Type E (-270°C to -200°C)	± 5.3°C	± 5.8°C	±6.7°C	± 14.0°C	± 15.4°C	±17.1°C
	Type S and R	± 2.8°C	± 3.1°C	±4.6°C	± 11.5°C	± 12.7°C	±13.5°C
	Type C	± 1.7°C	± 1.9°C	±2.7°C	± 7.0°C	± 7.7°C	±9°C
	Type B	± 3.3°C	± 3.7°C	±4.7°C	± 20.0°C	± 22.0°C	±24.5°C
RTD Inputs[86]	100 Ω Platinum 385	± 0.7°C	± 0.8°C	±.95°C	± 1.2°C	± 1.4°C	±1.85°C
	200 Ω Platinum 385	± 0.6°C	± 0.7°C	±.88°C	± 1.0°C	± 1.1°C	±1.3°C
	500 Ω Platinum 385	± 0.5°C	± 0.6°C	±.8°C	± 0.9°C	± 1.0°C	±.8°C
	1000 Ω Platinum 385	± 0.5°C	± 0.6°C	±.8°C	± 0.9°C	± 1.0°C	±.8°C
	100 Ω Platinum 3916	± 0.6°C	± 0.7°C	±.88°C	± 1.1°C	± 1.2°C	±.2.1°C
	200 Ω Platinum 3916	± 0.5°C	± 0.6°C	±.8°C	± 0.9°C	± 1.0°C	±2.1°C
	500 Ω Platinum 3916	± 0.4°C	± 0.5°C	±.67°C	± 0.8°C	± 0.9°C	±2.1°C
	1000 Ω Platinum 3916	± 0.4°C	± 0.5°C	±.67°C	± 0.8°C	± 0.9°C	±1.76°C
	Nickel 672	± 0.3°C	± 0.4°C	±.62°C	± 0.5°C	± 0.6°C	±.95°C
	Nickel 618	± 0.3°C	± 0.6°C	±.64°C	± 0.5°C	± 0.6°C	±1.2°C
	Nickel-Iron 518	± 0.4°C	± 0.5°C	±.64°C	± 0.7°C	± 0.8°C	±1.18°C
	Copper 426	± 1.0°C	± 1.1°C	±4.8°C	± 2.4°C	± 2.7°C	±9.25°C
Resistance Inputs[86]	250 Ω	± 0.25 Ω	± 0.28 Ω	±0.35 Ω	± 0.35 Ω	± 0.39 Ω	±0.46 Ω
	500 Ω	± 0.3 Ω	± 0.33 Ω	±0.38 Ω	± 0.45 Ω	± 0.5 Ω	±0.67 Ω
	1000 Ω	± 0.5 Ω	± 0.55 Ω	±0.64 Ω	± 0.8 Ω	± 0.88 Ω	±0.99 Ω
	2000 Ω	± 0.9 Ω	± 1.0 Ω	±0.1.4 Ω	± 1.5 Ω	± 1.65 Ω	±1.82 Ω
	3000 Ω	± 1.3 Ω	± 1.43 Ω	±1.58 Ω	± 2.2 Ω	± 2.42 Ω	±3.38 Ω
	4000 Ω	± 1.7 Ω	± 1.87 Ω	±2.0 Ω	± 2.9 Ω	± 3.19 Ω	±3.38 Ω
CJC Sensor	± 0.3°C maximum 0°C to +80°C						

[86] *Accuracy is dependent on the ADC output rate selection, data format, and input noise. In severe RF environments, accuracy may be degraded by up to ±2% of full scale.*

13.4.3 Maximum Accuracy Specifications

Maximum Error at:		**+25°C**		**0°C to +60°C**	
Configured Input Filter		***8, 12, 16 Hz***	***200 Hz***	***8, 12, 16 Hz***	***200 Hz***
Voltage Inputs[87]	± 10.5 V, 0.0 to +10.5 V	±5 mV	±5.5 mV	±10 mV	±11 mV
	0 to +5.25 V, +1.0 to +5.25 V	±3 mV	±3.3 mV	±5 mV	±5.5 mV
	± 155 mV	±50 uV	±55 uV	±130 uV	±143 uV
	± 55 mV	±20 uV	±22 uV	±95 uV	±108 uV
Current Inputs[86]	± 22.5 mA, 0.0 to +22.5 mA, +3.0 to +22.5 mA	±20 uA	±22 uA	±40 uA	±44 uA
Thermocouple Inputs[86]	Type J (-180°C to +1200°C)	±0.8°C	±0.9°C	±2.3°C	±2.6°C
	Type J (-210°C to -180°C)	±1.0°C	±1.13°C	±3.3°C	±3.7°C
	Type N (-160°C to +1300°C)	±1.0°C	±1.1°C	±4.5°C	±5.0°C
	Type N (-210°C to -160°C)	±1.8°C	±2.0°C	±8.0°C	±8.8°C
	Type T (-190°C to +400°C)	±0.9°C	±1.0°C	±4.0°C	±4.4°C
	Type T (-270°C to -190°C)	±6.7°C	±7.4°C	±18.0°C	±19.8°C
	Type K (-200°C to +1372°C)	±1.0°C	±1.1°C	±4.00°C	±4.4°C
	Type K (-270°C to -200°C)	±9.5°C	±10.5°C	±21.0°C	±23.1°C
	Type E (-200°C to +1000°C)	±0.8°C	±0.9°C	±3.0°C	3.4°C
	Type E (-270°C to -200°C)	±5.3°C	±5.8°C	±14.0°C	±15.4°C
	Type S and R	±2.8°C	±3.1°C	±11.5°C	±12.7°C
	Type C	±2.1°C	±2.3°C	±7.0°C	±7.7°C
	Type B	±3.3°C	±3.7°C	±20.0°C	±22.0°C
RTD Inputs[86]	100 Ω Platinum 385	±0.7°C	±0.8°C	±1.2°C	±1.4°C
	200 Ω Platinum 385	±0.6°C	±0.7°C	±1.0°C	±1.1°C
	500 Ω Platinum 385	±0.5°C	±0.6°C	±0.9°C	±1.0°C
	1000 Ω Platinum 385	±0.5°C	±0.6°C	±0.9°C	±1.0°C
	100 Ω Platinum 3916	±0.6°C	±0.7°C	±1.6°C	±1.9°C
	200 Ω Platinum 3916	±0.5°C	±0.6°C	±1.5°C	±1.75°C
	500 Ω Platinum 3916	±0.4°C	±0.5°C	±1.4°C	±1.6°C
	1000 Ω Platinum 3916	±0.4°C	±0.5°C	±1.4°C	±1.6°C
	Nickel 672	±0.3°C	±0.4°C	±0.6°C	±0.7°C
	Nickel 618	±0.3°C	±0.5°C	±0.8°C	±1.0°C
	Nickel-Iron 518	±0.4°C	±0.5°C	±0.7°C	±0.8°C
	Copper 426	±3.6°C	±4.0°C	±7.2°C	±8.1°C
Resistance Inputs[86]	250 Ω	±0.25 Ω	±0.28 Ω	±0.35 Ω	±0.39 Ω
	500 Ω	±0.3 Ω	±0.33 Ω	±0.45 Ω	±0.5 Ω
	1000 Ω	±0.5 Ω	±0.55 Ω	±0.8 Ω	±0.88 Ω
	2000 Ω	±0.9 Ω	±1.0 Ω	±1.5 Ω	±1.65 Ω
	3000 Ω	±1.3 Ω	±1.43 Ω	±2.9 Ω	±3.19 Ω
	4000 Ω	±1.7 Ω	±1.87 Ω	±2.9 Ω	±3.19 Ω
CJC Sensor	± 0.3°C maximum 0°C to +80°C				

[87] *Accuracy is dependent on the ADC output rate selection, data format, and input noise. In severe RF environments, accuracy may be degraded by up to ±2% of full scale.*

13.6 Field Wiring: ALG600

The following table lists wiring connections for Module. Except for RTD and resistance type inputs, channels are wired as differential inputs. There are no shield terminals. For shielding, tie cable shields to the ground bar along the bottom of the backplane. M3 tapped holes are provided in the ground bar for this purpose.

Terminal	RTD or Resistance	TC / Voltage / Current	RTD or Resistance	TC / Voltage / Current	Terminal
1		CJC1 IN+	Channel 1 EXC+		19
2		CJC1 IN-	Channel 1 IN+	Channel 1 IN+	20
3	Channel 2 EXC+			Channel 1 iRTN	21
4	Channel 2 IN+	Channel 2 IN+	Channel 1 IN-	Channel 1 IN -	22
5		Channel 2 iRTN	Channel 3 EXC+		23
6	Channel 2 IN-	Channel 2 IN -	Channel 3 IN+	Channel 3 IN+	24
7	Channel 4 EXC+			Channel 3 iRTN	25
8	Channel 4 IN+	Channel 4 IN+	Channel 3 IN-	Channel 3 IN-	26
9		Channel 4 iRTN	Channel 5 EXC+		27
10	Channel 4 IN-	Channel 4 IN -	Channel 5 IN+	Channel 5 IN+	28
11	Channel 6 EXC+			Channel 5 iRTN	29
12	Channel 6 IN+	Channel 6 IN+	Channel 5 IN-	Channel 5 IN-	30
13		Channel 6 iRTN	Channel 7 EXC+		31
14	Channel 6 IN-	Channel 6 IN-	Channel 7 IN+	Channel 7 IN+	32
15	Channel 8 EXC+			Channel 7 iRTN	33
16	Channel 8 IN+	Channel 8 IN+	Channel 7 IN-	Channel 7 IN-	34
17		Channel 8 iRTN		CJC2 IN+	35
18	Channel 8 IN-	Channel 8 IN-		CJC2 IN-	36

Figure 359: Thermocouple / Voltage / Current Field Wiring ALG600

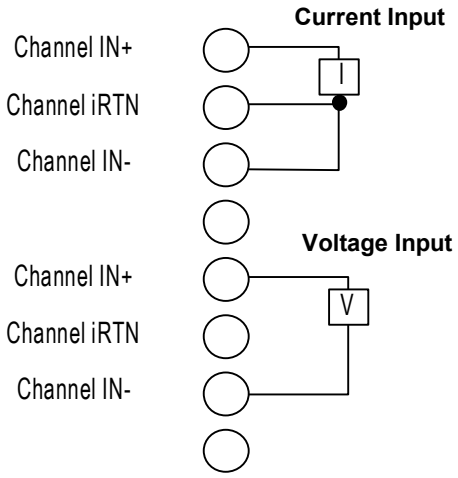

Figure 360: RTD / Resistance Field Wiring ALG600

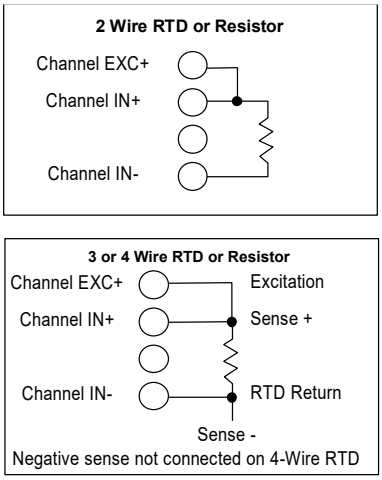

- For current inputs, tie the Return to the associated IN- pin.
- For 2 wire RTDs, tie EXC+ and IN+ together at the terminal block.
- For 4 wire RTDs, leave one of the negative sense leads unconnected.
- For 3 wire RTDs, IN+ = Sense+, IN- = RTD Return, and EXC+ = Excitation current.
- Unconnected RTD channels must have a jumper installed to assure proper operation. Failure to do so could affect the accuracy of adjacent channels.

Figure 361: Wiring Diagram for ALG600

This Module Doesn't Provide Loop Power for 2 Wire Current Transducers.

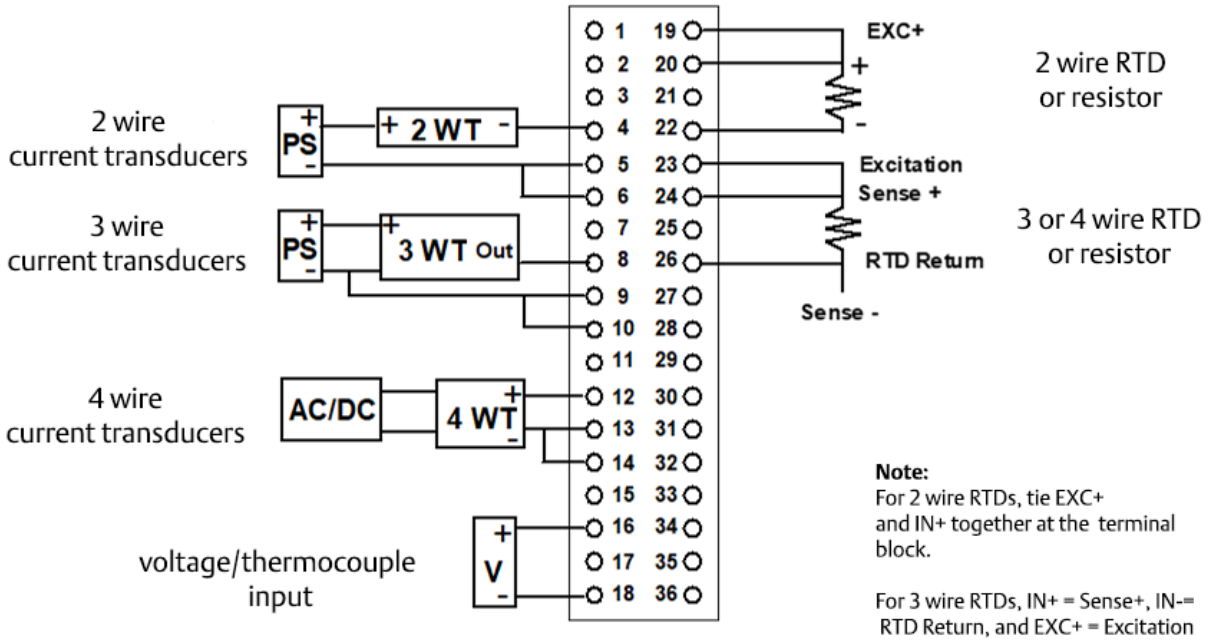

Note:
For 2 wire RTDs, tie EXC+ and IN+ together at the terminal block.

For 3 wire RTDs, IN+ = Sense+, IN-= RTD Return, and EXC+ = Excitation current.

For 4 wire RTDs, leave one of the negative sense leads off.

Note:
For current inputs, tie the Return to the associated IN-pin.

13.6.1 Installing CJC Sensors

When using thermocouple inputs on this module, the use of CJC sensors is recommended. Installing one CJC sensor will greatly improve the accuracy of thermocouple readings. Installing two CJC sensors will provide the highest thermocouple input accuracy. Refer to “CJC Scan Enable” later in this chapter for information about configuring and using CJC sensors.

A CJC sensor compensates for offset voltages introduced into the input signal where the thermocouple wires are connected to Module. A set of two CJC sensors is available as part number IC695ACC600.

The thermistor end of the CJC sensor must be installed in the CJC1 IN+ or CJC2 IN+ terminal for accurate thermocouple temperature measurements. The gold pin end of the sensor must be installed in the CJC1 IN- or the CJC2 IN- terminal.

Open the Terminal Block contacts fully before installing the CJC sensor. Insert the sensor into the Terminal Block contact, maintaining metal-to-metal contact between the thermistor and the Terminal Block contact.

For a Box-style Terminal Block, maintain pressure while screwing down the contact.

Figure 362: Installing Cold Junction Sensor

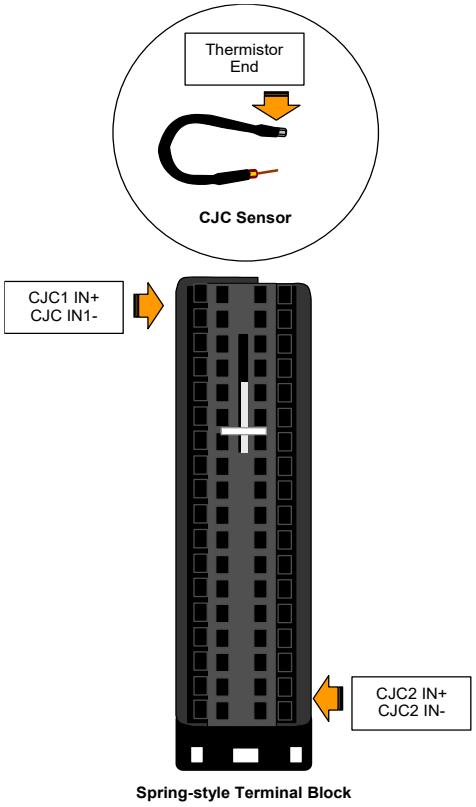

13.6.2 Connecting Channels to the Same Thermocouple Point

When connecting one or more channels from channels 1–4 and one or more channels from channels 5–8 to the same thermocouple point electrically, the point should be grounded. It can be grounded at either

the sensor or Module, by adding a jumper wire from frame ground to the low side of one thermocouple input.

13.8 Configuration: ALG600

13.8.1 Module Parameters

Parameter	Default	Description
Channel Value Reference Address	%AIxxxxx	Starting address for the input data of Module. This defaults to the next available %AI block.
Inputs Default	Force Off	In the event of module failure or removal, this parameter specifies the state of the Channel Value References. Force Off = Channel Values clear to 0. Hold Last State = Channel Values hold their last state.
Channel Value Reference Length	20	The number of words used for the input data of Module.
Diagnostic Reference Address	%Ixxxxx	Starting address for the channel diagnostics status data. This defaults to the next available %I block.
Diagnostic Reference Length	0	The number of bit reference bits (0 – 320) required for the Channel Diagnostics data. Default is 0, which means mapping of Channel Diagnostics is disabled. Change this to a non-zero value to enable Channel Diagnostics mapping.
Module Status Reference Address	%Ixxxxx	Starting address for the status data of Module. This defaults to the next available %I block.
Module Status Reference Length	0	The number of bits (0 – 32) required for Module Status data. Default is 0, which means mapping of Module Status data is disabled. Change this to a non-zero value to enable Module Status data mapping.
CJC Scan Enable	Disabled	Cold Junction Compensation can be: No Scan, Scan CJC1, Scan CJC2, Scan Both CJCs. Use of these parameters is described later in this section.
Channel Faults w/o Terminal Block	Disabled	Enabled / Disabled: Controls whether channel faults and configured alarm responses will be generated after a Terminal Block removal. The default setting of Disabled means channel faults and alarms are suppressed when the Terminal Block is removed. This parameter does not affect module faults including the Terminal Block loss/add fault generation.
I/O Scan Set	1	Assigns Module I/O status data to a scan set defined in the CPU configuration. Determines how often the RX3i polls the data

13.8.2 Channel 1 – 8 Parameters

Parameter	Default	Description
Range Type	Disabled	Voltage/Current, Thermocouple, RTD, Resistance, Disabled
Range (Not for Range Type Disabled)	-10 to +10 Vdc	For voltage/current: -10 to +10 Vdc, 0 to +10 Vdc, 0 to +5 Vdc, 1 to +5 Vdc, -50 to +50 mV, -150 to +150 mV, -20 to +20 mA, 4 to 20 mA, 0 to 20 mA
		For Thermocouple: B, C, E, J, K, N, R, S, T
		For RTD: Platinum 385: 100 Ω / 200 Ω/ 500 Ω/ 1000 Ω Platinum 3916: 100 Ω / 200 Ω / 500 Ω / 1000 Ω Nickel 672: 120 Ω Nickel 618: 100 Ω / 200 Ω / 500 Ω / 1000 Ω Nickel-Iron 518: 604 Ω Copper 426: 10 Ω
		For Resistance: 0-250 Ω, 0 – 500 Ω, 0 – 1000 Ω, 0 - 2000 Ω, 0 – 3000 Ω, 0 – 4000 Ω
Channel Value Format	32-bit Floating-point	16-bit integer or 32-bit floating-point
Temperature Units (for Thermocouple or RTD Range Type only)	Celsius	Celsius, Fahrenheit
RTD	RTD 2 Wire	(for RTD Range Type only) RTD 2 or 3 Wire
RTD Lead Resistance Compensation	Enabled	(for RTD Range Type only) Enabled, Disabled
High Scale Value (Eng Units)	The defaults for the four Scaling parameters depend on the configured Range Type and Range. Each Range and Range Type has a different set of defaults.	*Note: Scaling is disabled if both High Scale Eng. Units equals High Scale A/D Units and Low Scale Eng. Units equals Low Scale A/D Units.* Default is High A/D Limit of selected range type.
Low Scale Value (Eng Units)		Default is Low A/D Limit of selected range type. Must be lower than the high scaling value.
High Scale Value (A/D Units)		Default is High A/D Limit of selected range type. Must be greater than the low scaling value.
Low Scale Value (A/D Units)		Default is Low A/D Limit of selected range type.

13.8.3 Input Scaling: ALG600

By default, Module converts a voltage, current, resistance, or temperature input over the entire span of its configured Range into a floating-point value for the CPU. For example, if the Range of a channel is 4 to 20 mA, Module reports channel input values from 4.000 to 20.000. By modifying one or more of the four channel scaling parameters (Low/High Scale Value parameters) from their defaults, the scaled Engineering Unit range can be changed for a specific application. Scaling can provide inputs to the PLC that are already converted to their physical meaning, or convert input values into a range that is easier for the application to interpret. Scaling is always linear and inverse scaling is possible. All alarm values apply to the scaled Engineering Units value, not to the A/D input value.

The scaling parameters only set up the linear relationship between two sets of corresponding values. They do not have to be the limits of the input.

13.8.4 Example 1

For a voltage input, 6.0 Vdc represents a speed of 20 fps, and 1.0 Vdc represents 0 fps. The relationship in this range is linear. For this example, the input values should represent speed rather than volts. The following channel configuration sets up this scaling:

High Scale Value (Eng Units) = 20.000

Low Scale Value (Eng Units) = 0.000

High Scale Value (A/D Units) = 6.000

Low Scale Value (A/D Units) = 1.000

For this example, 1.0 to 6.0 V is the normal voltage range, but Module will attempt to scale the inputs for a voltage that lies outside the range. If a voltage of 10.0 V were input to the channel, Module would return a scaled channel value of 36.000. The application should use alarms or take other

Figure 363: Input Scaling Example 1: ALG600

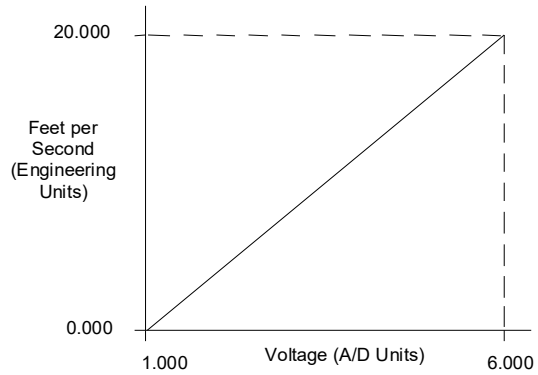

precautions for scaled inputs that are outside the acceptable range or invalid.

13.8.5 Example 2

An existing application uses traditional analog to digital (A/D) count integer values. With scaling and the optional 16-bit integer input option, a channel can be configured to report integer count values. In this example, the application should interpret +10 Vdc as 32000 counts and -10 Vdc as -32000 counts. The following channel configuration will scale a ±10 Vdc input channel to ±32000 counts.

Channel Value Format = 16-bit Integer

High Scale Value (Eng Units) = 32000.0

Low Scale Value (Eng Units) = -32000.0

High Scale Value (A/D Units) = 10.000

Low Scale Value (A/D Units) = -10.000

Figure 364: Input Scaling Example 2: ALG600

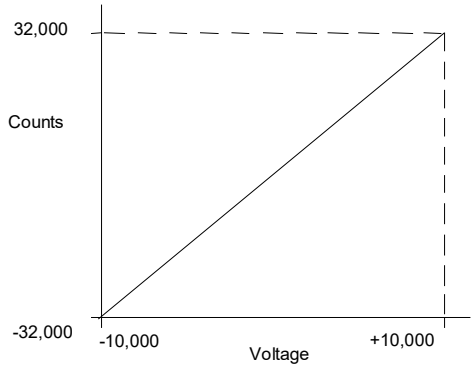

Channel 1 – 8 Parameters continued

Parameter	Default	Description
Positive Rate of Change Limit (Eng Units)	0.000	Rate of change in Engineering Units per Second that will trigger a Positive Rate of Change alarm. Default is disabled. Used with “Rate of Change Sampling Rate” parameter.
Negative Rate of Change Limit (Eng Units)	0.000	Rate of change in Engineering Units per Second that will trigger a Negative Rate of Change alarm. Default is disabled. Used with “Rate of Change Sampling Rate” parameter.
Rate of Change Sampling Rate	0.000	Time from 0 to 300 seconds to wait between comparisons. Default of 0.0 is to check after every input sample.

13.8.6 Rate of Change Alarms: ALG600

The Universal Analog module can detect both Negative Rate of Change and Positive Rate of Change in Engineering Units per Second. When either of the Rate of Change parameters is configured to be non-zero, Module takes the difference in Engineering Units between the previous rate of change sample and the current sample, then divides by the elapsed time between samples.

If the Engineering Unit change from the previous sample to current sample is negative, Module compares the rate change with the Negative Rate of Change parameter.

If the Engineering Unit change between samples is positive, Module compares the results in comparing the rate change with the Positive Rate of Change parameter value.

In either case, if the rate of change is greater than the configured rate, a rate of change alarm occurs. The actions taken by Module following the alarm depend on the enabled rate of change actions that have been set up in the "Diagnostic Reporting Enable, " "Fault Reporting Enable," and "Interrupts Enabled" parameters.

The Rate of Change Sampling Rate parameter determines how frequently Module compares the Rate of Change. If the Rate of Change Sampling Rate is 0 or any time period less than the channel update rate, Module compares the Rate of Change for every input sample of the channel.

Channel 1 – 8 Parameters continued

Parameter	Default	Description
High-High Alarm (Eng Units)	The defaults for the High-High, High, Low, and Low-Low parameters depend on the configured Range Type and Range. Each Range and Range Type has a different set of default values.	***Alarms and Deadbands*** All of the alarm parameters are specified in Engineering Units. To use alarming, the A/D Alarm Mode must also be configured as enabled. *High-High Alarm and Low-Low Alarm:* When the configured value is reached or passed, a Low-Low Alarm or High-High Alarm is triggered. The configured values must be lower than/higher than the corresponding low/high alarm limits. *High Alarm and Low Alarm:* When the configured value is reached or below (above), a Low (High) Alarm is triggered. *High and Low Alarm Deadbands:* A range in Engineering Units above the alarm condition (low deadband) or below the alarm condition (high deadband) where the alarm status bit can remain set even after the alarm condition goes away. For the alarm status to clear, the channel input must fall outside the deadband range. Alarm Deadbands should not cause the alarm clear to be outside the Engineering Unit User Limits range. For example, if the engineering unit range for a channel is -1000.0 to +1000.0 and a High Alarm is set at +100.0, the High Alarm Deadband value range is 0.0 to less than 1100.0. A deadband of 1100.0 or more would put the High Alarm clear condition below –1000.0 units making the alarm impossible to clear within the limits.
High Alarm (Eng Units)		
Low Alarm (Eng Units)		
Low-Low Alarm (Eng Units)		
High-High Alarm Deadband (Eng Units)		
High Alarm Deadband (Eng Units)		
Low Alarm Deadband (Eng Units)		
User Offset	0.000	Engineering Units offset to change the base of the input channel. This value is added to the scaled value on the channel prior to alarm checking.
Software Filter Integration Time (ms)	0.000	Specifies the amount of time in milliseconds for the software filter to reach 63.2% of the input value. A value of 0 indicates software filter is disabled. A value of 100 indicates data will achieve 63.2% of its value in 100ms. Default is disabled
A/D Filter Frequency	40 Hz	Low pass A/D hardware filter setting: 8, 12, 16, 40, 200, or 1000 Hz. Default is 40 Hz. Frequencies below this are not filtered by hardware.

Parameter	Default	Description
Diagnostic Reporting Enable If Diagnostic Reporting is enabled, the additional parameters listed below can be used to enable specific types of alarms.	Disabled	Diagnostic Reporting Enable options are used to enable reference memory reporting of alarms into the Diagnostic Reference area. Fault Reporting Enable options enable fault logging of alarms into the I/O Fault Table. Interrupts Enable options enable I/O Interrupt trigger when alarm conditions occur. These parameters enable or disable the individual diagnostics features of a channel. When any of these parameters is enabled, Module uses associated parameters to perform the enabled feature. For example, if Over Range is enabled in the “Diagnostic Reporting Enable” menu, Module will set the Over Range bit in the Diagnostic Reference for the channel. If any of these parameters is disabled, Module does not react to the associated alarm conditions. For example, if Low Alarm Enable is set to Disabled in the “Fault Reporting Enable” menu, the Low Alarm fault is not logged in the I/O Fault Table when Low Alarm is detected on the channel.
Fault Reporting Enable If Fault Reporting is enabled, the additional parameters listed below can be used to enable specific types of Faults.	Disabled	
Interrupts Enable If Interrupts are enabled, the additional parameters listed below can be used to enable specific types of Interrupts.	Disabled	
Low Alarm Enable	Disabled	
High Alarm Enable	Disabled	
Under Range Enable	Disabled	
Over Range Enable	Disabled	
Open Wire Enable	Disabled	
Calibration Fault Enable	Disabled	
Low-Low Alarm Enable	Disabled	
High-High Alarm Enable	Disabled	
Negative Rate of Change Detection Enable	Disabled	
Positive Rate of Change Detection Enable	Disabled	

13.8.7 Using Alarming: ALG600

The Diagnostic Reporting Enable, Fault Reporting Enable, and Interrupt Enable configuration parameters can be used to enable different types of responses for individual channel alarms. By default, all responses are disabled on every channel. Any combination of alarm enables can be configured for each channel.

- If Diagnostic Reporting is enabled, Module reports channel alarms in reference memory at the Diagnostic Reference address configured for that channel.
- If Fault Reporting is enabled, Module logs a fault log in the I/O Fault table for each occurrence of a channel alarm.
- If Interrupts are enabled, an alarm can trigger execution of an Interrupt Block in the application program, as explained below.

13.8.8 Using Interrupts

To properly configure an I/O Interrupt, the Interrupt enable bit or bits must be set in the configuration profile of Module. In addition, the program block that should be executed in response to the channel interrupt must be mapped to the reference address corresponding to that channel.

13.8.9 Example:

In this example, the Channel Values Reference Address block is mapped to %AI0001-%AI0020. An I/O Interrupt block should be triggered if a High Alarm condition occurs on channel 2.

- Configure the High-Alarm condition.
- Set the High-Alarm Interrupt Enable flag for Channel 2 in Module configuration.

The reference address for Channel 2 corresponds to %AI00003 (2 Words per channel), so the interrupt program block Scheduling properties should be set for the "I/O Interrupt" Type and "%AI0003" as the Trigger.

Note on Using Interrupts

This module has separate enable/disable options for Diagnostic Reporting and Interrupts. Normally, disabling a diagnostic (such as Low/High Alarm or Over/Under range) in the configuration means that its diagnostic bit is never set. However, if interrupts are enabled for a condition and that interrupt occurs, the diagnostic bit for that condition is also set during the I/O Interrupt block logic execution. The next PLC input scan always clears this interrupt status bit back to 0, because Diagnostic Reporting has it disabled.

13.8.10 CJC Parameters

Parameter	Default	Description
Channel Value Format	16-bit Integer	16-bit integer or 32-bit floating-point
Temperature Units	Celsius	Celsius, Fahrenheit
User Offset (Temperature Units)	0.000	Temperature offset added to CJC values. Range –25°C to +25°C with C temp units and -45°F to +45°F with F temp units.
Diagnostic Reporting Enable	Disabled	These parameters enable or disable the individual diagnostics features of a CJC input.
Under Range Enable	Disabled	
Over Range Enable	Disabled	
Open Wire Enable	Disabled	
Fault Reporting Enable	Disabled	
Under Range Enable	Disabled	
Over Range Enable	Disabled	
Open Wire Enable	Disabled	
Interrupts Enable	Disabled	
Under Range Enable	Disabled	
Over Range Enable	Disabled	
Open Wire Enable	Disabled	

13.8.11 CJC Scan Enable

Cold Junction Compensation for Module can be configured as: Disabled, CJC1 only, CJC2 only, or Both CJCs.

Compensation Options	Description	CJC1 Scanning	CJC2 Scanning
No Scan	Module assumes 25°C for any thermocouple compensation.	Disabled	Disabled
Scan Both	Highest thermocouple compensation accuracy. Uses both values in thermocouple compensation as explained below.	Enabled	Enabled
Scan CJC1 only	Lowers the thermocouple compensation accuracy, but can improve scan time for channels 5-8.	Enabled	Disabled
Scan CJC2 only	Lowers the thermocouple compensation accuracy, but can improve scan time for channels 1-4.	Disabled	Enabled

When scanning both CJC inputs, Module subtracts the temperature of CJC2 from the temperature of CJC1. It then multiplies the difference by a specific multiplier for each channel to compensate for the position of the channel on the terminal block.

Channel	Channel Multiplier	Channel	Channel Multiplier
1	0.10	5	0.45
2	0.05	6	0.60
3	0.25	7	0.75
4	0.25	8	0.90

For example: if CJC1 is 30°C and CJC2 is 25°C, the compensated channel 1 terminal block temperature is
30 - [(30-25) * 0.10] = 29.5°C. Module then adjusts this temperature for the particular thermocouple type to determine the thermoelectric effect (mV) caused by the connection at the terminal block.

13.9 Module Data: ALG600

Module reports its input channel data in 20 input words, beginning at its assigned Channel Value Reference Address. Each channel occupies two words (whether the channel is used or not):

Channel Value Reference Address	Contains this Input
+0, 1	Channel 1
+2, 3	Channel 2
+4, 5	Channel 3
+6, 7	Channel 4
+8, 9	Channel 5
+10, 11	Channel 6
+12, 13	Channel 7
+14, 15	Channel 8
+16, 17	CJC1
+18, 19	CJC2

Depending on its configured Channel Value Format, each enabled channel reports a 32-bit floating-point or 16-bit integer value to the CPU.

In the 16-bit integer mode, low word of the 32-bit channel data area contains the 16-bit integer channel value. The high word (upper 16-bits) of the 32-bit value are set with the sign extension of the 16-bit integer. This sign-extended upper word allows the 16-bit integer to be read as a 32-bit integer type in logic without losing the sign of the integer. If the 16-bit integer result is negative, the upper word in the 32-bit channel data has the value 0xFFFF. If the 16-bit integer result is positive, the upper word is 0x0000.

13.9.1 Resolution and Update Time

The actual resolution and update time for each input depend on the Range Type and A/D Filter Frequency configured for that channel. At higher Filter Frequencies, channel update time increases while input resolution decreases. The approximate number of bits for each Filter Frequency and Range Type are displayed in the following table.

Filter Frequency	Range Type: Voltage / Current Approximate Number of Bits	Range Type: TC / mV Approximate Number of Bits	Channel Update Time
8 Hz	16	16	127 ms
12 Hz	16	16	87 ms
16 Hz	16	16	67 ms
40 Hz	16	14	27 ms
200 Hz	14	13	13 ms
1000 Hz	11	11	10 ms

13.9.2 Isolated Input Groups

This module provides two isolated groups of four input channels each. This allows fast inputs and slower or highly-filtered inputs to be connected to the same module without adversely affecting the update rate of the fast inputs. To take advantage of this feature, up to four inputs requiring fast response should be placed together in one isolated group while slower inputs should be connected to the other isolated group. For example, voltage and current inputs with higher frequency input filter settings should be grouped together on one of the isolated groups while thermocouple, RTD, resistance, or voltage/current inputs with low-frequency input filter settings should be grouped together on the other isolated group.

Each isolated group provides a CJC input. The CJC input is considered a slow-response input and will reduce the update rate for the associated channel group when enabled.

13.9.3 Channel Diagnostic Data: ALG600

In addition to the 20 words of input data from field devices, Module can be configured to report 320 bits (20 words) of channel diagnostics status data to the CPU. The CPU stores this data at the *Diagnostic Reference Address* configured for Module. Use of this feature is optional.

The diagnostics data for each channel occupies two words (whether the channel is used or not):

Diagnostic Reference Address	Contains Diagnostics Data for:
+0, 1	Channel 1
+2, 3	Channel 2
+4, 5	Channel 3
+6, 7	Channel 4
+8, 9	Channel 5
+10, 11	Channel 6
+12, 13	Channel 7
+14, 15	Channel 8
+16, 17	CJC1
+18, 19	CJC2

When a diagnostic bit equals 1, the alarm or fault condition is present on the channel. When a bit equals 0 the alarm or fault condition is either not present or detection is not enabled in the configuration for that channel.

For each channel, the format of this data is:

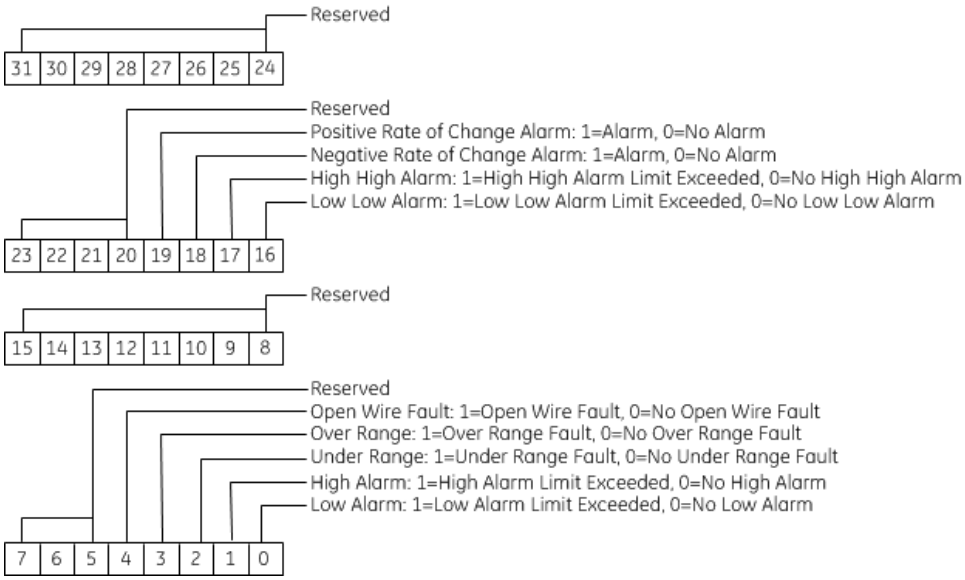
Reserved
31 30 29 28 27 26 25 24
Reserved
Positive Rate of Change Alarm: 1=Alarm, 0=No Alarm
Negative Rate of Change Alarm: 1=Alarm, 0=No Alarm
High High Alarm: 1=High High Alarm Limit Exceeded, 0=No High High Alarm
Low Low Alarm: 1=Low Low Alarm Limit Exceeded, 0=No Low Low Alarm
23 22 21 20 19 18 17 16
Reserved
15 14 13 12 11 10 9 8
Reserved
Open Wire Fault: 1=Open Wire Fault, 0=No Open Wire Fault
Over Range: 1=Over Range Fault, 0=No Over Range Fault
Under Range: 1=Under Range Fault, 0=No Under Range Fault
High Alarm: 1=High Alarm Limit Exceeded, 0=No High Alarm
Low Alarm: 1=Low Alarm Limit Exceeded, 0=No Low Alarm
7 6 5 4 3 2 1 0

13.9.5 Module Status Data: ALG600

Module can also optionally be configured to return two bits of module status data to the CPU. The CPU stores this data in the 32-bit *Module Status Data* reference area configured for Module.

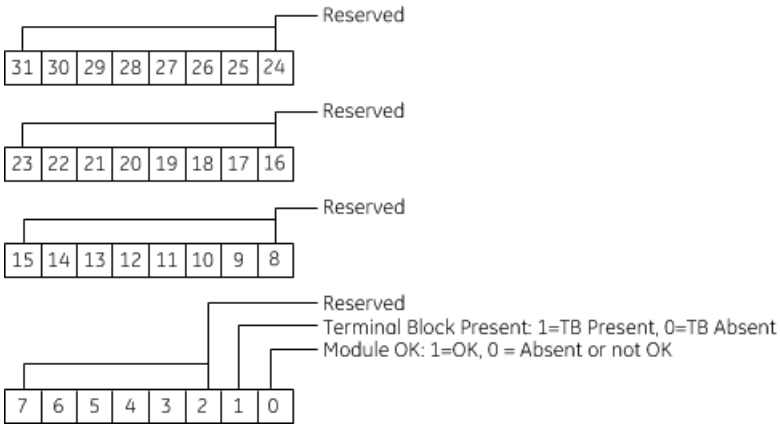

13.9.6 Terminal Block Detection

Module automatically checks for the presence of a Terminal Block.

The TB LED indicates the state of the terminal block of Module. It is green when the Terminal Block is present or red if it is not.

Faults are automatically logged in the CPU I/O Fault table when the terminal block is inserted or removed from a configured module in the system. The fault type is Field Fault and the fault description indicates whether the fault is a "Loss of terminal block" or an "Addition of terminal block". If a Terminal Block is not present while a configuration is being stored, a "Loss of terminal block" fault is logged.

Bit 1 of Module Status Reference indicates the status of the terminal block. To enable Module Status reporting, Module Status Reference must be configured. During operation, the PLC must be in an I/O Enabled mode for the current Module Status to be scanned and updated in reference memory.

Section 14: Thermocouple Input Modules

This chapter describes the following Thermocouple input modules for PACSystems RX3i controllers.

Thermocouple Module Description	Catalog Number	Section
Thermocouple Input Module 6-Channel Isolated	IC695ALG306	14.1
Thermocouple Input Module 12-Channel Isolated	IC695ALG312	14.1
Thermocouple Input Module 12-Channel Isolated (Improved Noise Rejection)	IC695ALG412	14.2

For operating information common to these modules, refer to Section 14.3.

14.1 Thermocouple Input 6-/12-Channel Isolated Modules IC695ALG306 & IC695ALG312

Figure 365: IC695ALG306

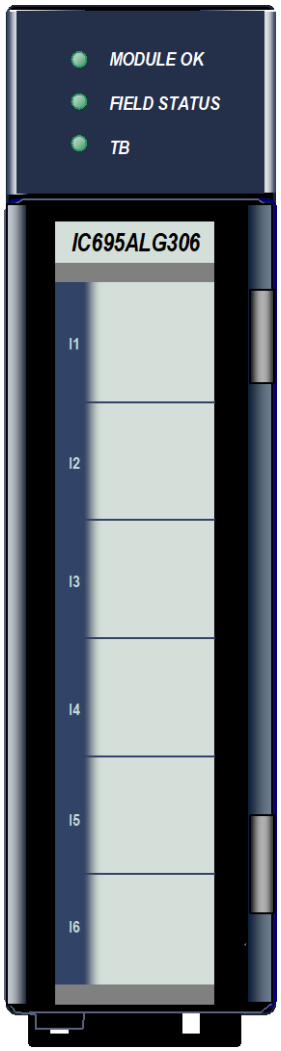

Thermocouple Input module, IC695ALG306, provides six isolated differential thermocouple input channels.

Thermocouple Input module, IC695ALG312, provides twelve isolated differential thermocouple input channels.

Each channel can be individually configured for inputs from:

- Thermocouple types: J, K, T, E, R, S, B, N, or C
- Voltage: ±150 mV or ±50 mV

14.1.1 Features

- Completely software-configurable, no module jumpers to set
- Thermocouple Linearization based on ITS-90
- 32-bit IEEE floating-point or 16-bit integer (in 32-bit field) input data format selectable per channel
- Temperature units selectable in °C and °F
- User Scaling
- Programmable notch filter from 2.3 to 28 Hz per channel
- Under Range/Over Range alarm detection and reporting by channel
- Alarm dead band for high alarm, low alarm, high-high alarm, and low-low alarm by channel
- Wire-off (open circuit) condition support for all inputs.
- Module fault status reporting (Watchdog, Ram Fail, Flash Fail)
- Module identity and status reporting including LED status indicators
- User offset for all channels including CJCs.
- Supports Cold Junction Compensation on Terminal Block (Cold Junction Sensors sold separately).
- Support field upgrade of firmware application code.
- Optional “CJC Disable” selection
- Reports CJC temperatures as separate channels in Input Data.
- CJC update rate is fixed at 20 Hz.
- CJC filter setting fixed with first notch at 10 Hz, and 3 dB input attenuation at 4.7 Hz.

- Terminal Block detection switch
- Module must be located in an RX3i Universal Backplane.
- Module supports insertion into and removal from an RX3i Universal Backplane which is under power. Refer to *Hot Insertion and Removal*.

Module supports firmware upgrades using the WinLoader software utility (if the host CPU has a serial port) or using a Web-based tool (if the host CPU has no serial port). Instructions are included with the firmware upgrade kit.[25]

Module can be used with a Box-style (IC694TBB032), Extended Box-style (IC694TBB132), Spring-style (IC694TBS032), or Extended Spring-style (IC694TBS132) Terminal Block. Extended terminal blocks provide the extra shroud depth needed for shielded wiring. Terminal Blocks are ordered separately.

14.1.2 Specifications: ALG306 & ALG312

Specification	Description		
Number of Channels	6/12 Individually isolated channels		
Resolution	11.5–16 bits (refer to filter table)		
Measuring method selectable per channel	Voltage**:** ±50 mV and ±150 mV Thermocouple types: J, K, T, E, R, S, B, N and C		
Integration time for 12 channels	Configurable from 15 to 120 ms.		
Voltage Accuracy over temperature span	±0.1% of voltage span at 25°C. ±0.25% of span over temperature range.		
Thermocouple Input Types and Ranges	**Thermocouple Type**	**Temperature Range(°C)**	
	Type B	+300 to +1820	
	Type C	0 to +2315	
	Type E	-270 to +1000	
	Type J	-210 to +1200	
	Type K	-270 to +1372	
	Type N	-210 to +1300	
	Type R	0 to +1768	
	Type S	0 to +1768	
	Type T	-270 to +400	
Voltage Input Ranges	**Input Type**	**Voltage Range**	
	-50 to +50 mV	-55.0 to +55.0 mV	
	-150 to +150 mV	-155.0 to +155.0 mV	
Module temperature accuracy for thermocouple inputs over temperature span (2.3, 4, and 4.7 Hz filters). Does not include cold junction compensation or thermocouple tolerances.	**Thermocouple Type & Range**	**+25°C**	**0°C to +60°C**
	Type J (-180 °C to +1200 °C)	±0.6°C	±2.3°C
	Type J (-210 °C to -180 °C)	±0.8°C	±3.3°C
	Type N (-160 °C to +1300 °C)	±1.0°C	±4.5°C
	Type N (-210 °C to -160 °C)	±1.8°C	±8.0°C
	Type T (-190 °C to +400 °C)	±0.9°C	±4.0°C
	Type T (-270 °C to -190 °C)	±6.7°C	±18.0°C
	Type K (-200 °C to +1372 °C)	±1.0°C	±4.0°C
	Type K (-270 °C to -200 °C)	±9.5°C	±21.0°C

Specification	Description		
	Type E (-200 °C to +1000 °C)	±0.6°C	±2.5°C
	Type E (-270°C to -200°C)	±5.3°C	±14.0°C
	Type S and R	±2.8°C	±11.5°C
	Type C	±1.7°C	±7.0°C
	Type B	±3.3°C	±20.0°C
Measurement Units	Degrees C or F, or Voltage		
Repeatability	0.05% of voltage span at a constant temperature over a 30-second period		
Diagnostics reported to the controller	User configurable for Over Range, Under Range, High and Low Alarm, High-high and Low-low alarm, Open Circuit Detection, Positive and Negative Rate of Change alarm		
Channel-to-channel crosstalk	70 dB minimum		
Common Mode Rejection	2.3 Hz filter, 50 Hz/60 Hz: 100 dB 4 Hz filter, 50 Hz: 100 dB 4.7 Hz filter, 60 Hz: 100 dB		
Default or Hold Last State	Configurable per channel for Default to 0 or Hold Last State		
Fault Reporting	Configurable per channel to enable or disable fault reporting for under or over range alarm, open circuit, rate of change alarm.		
Rate of change	Configurable per channel to enable/disable and specify positive and negative rate of change alarms.		
Channel Value Format	Configurable as 16-bit integer (in a 32-bit field) or 32-bit real number.		
Backplane Power Requirements	For ALG306-EB or earlier: 3.3 V = 400 mA; 5 V = 225 mA ALG312-EB or earlier: 3.3 V = 400 mA: 5 V = 425 mA		
	For ALG312-FC or later: 3.3 V = 315 mA: 5 V = 150 mA		
Input Impedance	Voltage: >=500 kΩ		
Power Dissipation within Module	IC695ALG306 = 2.5 W max IC695ALG312 = 3.5 W max		
Isolation Voltage (Field to Backplane and Channel to Channel) (CJC inputs are not isolated from the backplane)	250 Vac Continuous 1500 Vac 1 minute 2550 Vdc 1 second		
Normal Mode Noise Rejection	2.3 Hz filter, 50 Hz/60 Hz: 67 dB 4 Hz filter, 50 Hz/60 Hz: 80 dB 24 Hz filter, 50 Hz/60 Hz: 25 dB		
CJC measurement resolution	0.01 °(C or F) for temperatures 0-60°C		
CJC Temperature Accuracy	±1.5°C max (0-60°C) when using IC695ACC600 with an accuracy of ±0.3°C)		
Module Filter settings, update	**Filter Frequency (-3 dB frequency)**	**Update Time (ms)**	**Normal Mode Rejection at 50 Hz/60 Hz**
	2.3 Hz	120 (130 max)	67 dB at 50 Hz/60 Hz

Specification		Description	
times, rejection and resolution	4 Hz	70 (80 max)	80 dB at 50 Hz
	4.7 Hz	60 (70 max)	80 dB at 60 Hz
	24 Hz	20 (30 max)	25 dB at 50 Hz
	28 Hz	15 (25 max)	25 dB at 60 Hz

Update Time: ALG306 & ALG312

The channel update times include channel scan time and filter delay time. The update rate of any individual channel is independent of that of any other channel.

Module update time is the time required for Module to sample and convert the input signals, and provide the resulting data values to the processor.

Module Resolution: ALG306 & ALG312

Module resolution depends on the input type and the filter chosen. The following table summarizes the effective number of bits of resolution, by filter and input type. It is based on the full-scale range of the input type. If integer format is used, the resolution is limited to 16 bits.

		Filter Setting / Resolution									
Input		**2.3 Hz**		**4.0 Hz**		**4.7 Hz**		**24 Hz**		**28 Hz**	
Type	**Op Range**	**Bits**	**°C**	**Bits**	**°C**	**Bits**	**°C**	**Bits**	**°C**	**Bits**	**°C**
J	>-180°C	15.0	0.09	14.8	0.10	14.7	0.11	11.6	0.93	11.0	1.40
	<-180°C		0.12		0.14		0.15		1.25		1.89
K	>-200°C	14.6	0.15	14.4	0.17	14.3	0.18	11.2	1.56	10.6	2.37
	<-200°C		2.37		2.72		2.92		25.0		37.9
T	>-190°C	13.4	0.13	13.2	0.15	13.1	0.16	10.0	1.39	9.4	2.11
	<-190°C		1.18		1.36		1.46		12.50		18.95
E	>-200°C	15.0	0.09	14.8	0.11	14.7	0.12	11.6	1.00	11.0	1.52
	>-200°C		1.18		1.36		1.46		12.50		18.95
R		13.1	0.47	12.9	0.54	12.8	0.58	9.7	5.00	9.1	7.58
S		13.0	0.47	12.8	0.54	12.7	0.58	9.6	5.00	9.0	7.58
B		12.5	0.79	12.3	0.91	12.2	0.97	9.1	8.33	8.5	12.63
N	>-160°C	14.4	0.16	14.2	0.18	14.1	0.19	11.0	1.67	10.4	2.53
	<-160°C		0.30		0.34		0.36		3.13		4.74
C		14.9	0.26	14.7	0.30	14.6	0.32	11.5	2.78	10.9	4.21
Voltage			(µV)		(µV)		(µV)		(µV)		(µV)
	±50 mV	15.5	2.4	15.3	2.8	15.2	3.0	12.1	25.0	11.5	37.9
	±150 mV	17.0	2.4	16.8	2.8	16.7	3.0	13.6	25.0	13.0	37.9

14.2 Thermocouple Input 12-Channel Isolated Module IC695ALG412

Figure 366: IC695ALG412

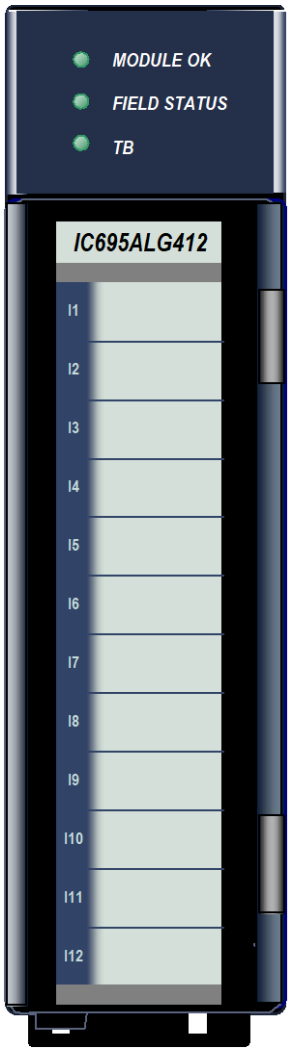

The ***Thermocouple Input*** module, IC695ALG412, provides twelve isolated differential thermocouple input channels. The ALG412 offers a 10 dB improvement in noise rejection compared to the ALG312 thermocouple input module.

Each channel can be individually configured for inputs from:

- Thermocouple types: J, K, T, E, R, S, B, N, or C
- Voltage: ±50 mV

14.2.1 Features

- Completely software-configurable, no module jumpers to set
- Thermocouple Linearization based on ITS-90
- 32-bit IEEE floating-point or 16-bit integer (in 32-bit field) input data format selectable per channel
- Temperature units selectable in °C and °F
- User Scaling
- Programmable notch filter from 2.3 to 28 Hz per channel
- Under Range/Over Range alarm detection and reporting by channel
- Alarm dead band for high alarm, low alarm, high-high alarm, and low-low alarm by channel
- Wire-off (open circuit) condition support for all inputs.
- Module fault status reporting (Watchdog, Ram Fail, Flash Fail)
- Module identity and status reporting including LED status indicators
- User offset for all channels including CJCs.
- Supports Cold Junction Compensation on Terminal Block (Cold Junction Sensors sold separately).
- Support field upgrade of firmware application code.

- Optional CJC enable selections
- Reports CJC temperatures as separate channels in Input Data
- CJC update rate is fixed at 20 Hz.
- CJC filter setting fixed with first notch at 60 Hz, and 3 dB input attenuation at 26.5 Hz.
- Terminal Block detection switch.
- Module must be located in an RX3i Universal Backplane.
- Module supports insertion into and removal from an RX3i Universal Backplane which is under power. Refer to *Hot Insertion and Removal*.

Module supports firmware upgrades using the WinLoader software utility (if the host CPU has a serial port) or using a Web-based tool (if the host CPU has no serial port). Instructions are included with the firmware upgrade kit.[25]

These modules can be used with a Box-style (IC694TBB032), Extended Box style (IC694TBB132), Spring-style (IC694TBS032), or Extended Spring-style (IC694TBS132) Terminal Block.

14.2.2 Specifications: ALG412

Specification	Description			
Number of Channels	12 Individually isolated channels			
Resolution	11.5–16 bits (refer to filter table)			
Measuring method selectable per channel	Voltage**:** ±50 mV Thermocouple types: J, K, T, E, R, S, B, N and C			
Integration time for 12 channels	Configurable from 15 to 120 ms.			
Voltage Accuracy over temperature span	± 0.1% of voltage span at 25°C. ± 0.25% of span over temperature range.			
Thermocouple Input Types and Ranges	**Thermocouple Type**	**Temperature Range(°C)**		
	Type B	+300 to +1820		
	Type C	0 to +2315		
	Type E	-270 to +1000		
	Type J	-210 to +1200		
	Type K	-270 to +1372		
	Type N	-210 to +1300		
	Type R	0 to +1768		
	Type S	0 to +1768		
	Type T	-270 to +400		
Voltage Input Ranges	**Input Type**	**Voltage Range**		
	-50 to +50 mV	-55.0 to +55.0 mV		
Module temperature accuracy for thermocouple inputs over temperature span (2.3, 4, 4.7 and 8Hz filters). Does not include cold junction compensation or thermocouple tolerances.	**Thermocouple Type & Range**	**+25°C**	**0–60°C**	**40–75°C**
	Type J (-180 °C to +1200 °C)	± 0.6°C	± 2.3°C	-
	Type J (-210 °C to -180 °C)	± 0.8°C	± 3.3°C	-
	Type J (5 °C to 45 °C)	-	-	± 1.25°C
	Type N (-160 °C to +1300 °C)	± 1.0°C	± 4.5°C	-
	Type N (-210 °C to -160 °C)	± 1.8°C	± 8.0°C	-
	Type T (-190 °C to +400 °C)	± 0.9°C	± 4.0°C	-

Specification	Description			
	Type T (-270 °C to -190 °C)	± 6.7°C	± 18.0°C	-
	Type K (-200 °C to +1372 °C)	± 1.0°C	± 4.0°C	-
	Type K (-270 °C to -200 °C)	± 9.5°C	± 21.0°C	-
	Type K (5 °C to 45 °C)	-	-	± 2.5°C
	Type E (-200 °C to +1000 °C)	± 0.6°C	± 2.5°C	-
	Type E (-270°C to -200°C)	± 5.3°C	± 14.0°C	-
	Type S and R	± 2.8°C	± 11.5°C	-
	Type C	± 1.7°C	± 7.0°C	-
	Type B	± 3.3°C	± 20.0°C	-
Measurement Units	Degrees C or F, or Voltage			
Repeatability	0.05% of voltage span at a constant temperature over a 30-second period			
Diagnostics reported to the controller	User configurable for Over Range, Under Range, High and Low Alarm, High-high and Low-low alarm, Open Circuit Detection, Positive and Negative Rate of Change alarm			
Channel-to-channel crosstalk	70 dB minimum			
Common Mode Rejection	All filters, 50 Hz/60 Hz: 110 dB			
Default or Hold Last State	Configurable per channel for Default to 0 or Hold Last State			
Fault Reporting	Configurable per channel to enable or disable fault reporting for under or over range alarm, open circuit, rate of change alarm.			
Rate of change	Configurable per channel to enable/disable and specify positive and negative rate of change alarms.			
Channel Value Format	Configurable as 16-bit integer (in a 32-bit field) or 32-bit real number.			
Backplane Power Requirements	For ALG412-CB and earlier: 3.3 V = 400 mA; 5.0 V = 425 mA			
	For ALG412-DC and later: 3.3 V = 315 mA; 5.0 V = 150 mA			
Input Impedance	Voltage: >=500 kΩ			
Power Dissipation within Module	IC695ALG412 = 3.5 W max			
Isolation Voltage (Field to Backplane and Channel to Channel) (CJC inputs are not isolated from the backplane)	250 Vac Continuous 1500 Vac 1 minute 2550 Vdc 1 second			
CJC measurement resolution	0.01° (C or F) for temperatures 0-60°C			
CJC Temperature Accuracy	±1.5°C max (0-60°C) when using IC695ACC600 with an accuracy of ±0.3°C)			
Module Filter settings, update times, rejection	**Filter Frequency (-3 dB frequency)**	**Update Time (milliseconds)**	**Normal Mode Noise Rejection at 50/60 Hz**	
	2.3 Hz	120 (130 max)	80 dB at 50 Hz/60 Hz	
	4.0 Hz	70 (80 max)	80 dB at 50 Hz, 65 dB at 60 Hz	
	4.7 Hz	60 (70 max)	80 dB at 50 Hz/60 Hz	
	8.0 Hz	30 (40ms max)	48 dB at 50 Hz; 28 dB at 60 Hz	

Specification		Description	
and resolution	24.0 Hz	20 (30 max)	38 dB at 50 Hz
	28.0 Hz	15 (25 max)	38 dB at 60 Hz

Update Time: ALG412

The channel update times include channel scan time and filter delay time. The update rate of any individual channel is independent of that of any other channel.

Module update time is the time required for Module to sample and convert the input signals, and provide the resulting data values to the processor.

Module Resolution: ALG412

Module resolution depends on the input type and the filter chosen. The following table summarizes the effective number of bits of resolution, by filter and input type. It is based on the full-scale range of the input type. If integer format is used, the resolution is limited to 16 bits.

Input Type		Filter Setting / Resolution											
	Op	2.3 Hz		4.0 Hz		4.7 Hz		8 Hz		24 Hz		28 Hz	
	Range	Bits	°C	Bits	°C	Bits	°C	Bits	°C	Bits	°C	Bits	°C
J	<-180°C	14.8	0.04	15.0	0.03	14.6	0.05	14.9	0.04	13.9	0.08	13.6	0.09
	>-180°C	14.9	0.04	14.9	0.04	15.2	0.03	15.2	0.03	14.4	0.05	14.0	0.07
K	<-200°C	13.8	0.06	13.5	0.08	13.1	0.10	13.0	0.11	11.7	0.27	10.9	0.48
	>-200°C	14.3	0.04	14.3	0.04	14.5	0.04	14.5	0.04	13.4	0.08	12.7	0.14
T	<-190°C	13.4	0.05	13.4	0.05	13.4	0.05	13.1	0.06	11.7	0.16	11.1	0.25
	>-190°C	15.2	0.01	15.0	0.02	15.0	0.02	15.1	0.02	14.0	0.03	13.5	0.05
E	<-200°C	14.5	0.04	14.4	0.05	14.0	0.06	14.3	0.05	13.4	0.09	12.7	0.15
	>-200°C	15.1	0.03	15.0	0.03	15.0	0.03	15.2	0.03	13.6	0.08	13.0	0.13
R		14.4	0.07	14.6	0.06	14.7	0.06	14.4	0.07	13.1	0.16	12.2	0.31
S		14.3	0.07	14.1	0.08	14.3	0.07	14.3	0.07	13.1	0.16	13.6	0.12
B		13.2	0.14	13.0	0.15	12.8	0.17	12.3	0.24	11.2	0.52	10.9	0.65
N	<-160°C	14.3	0.06	14.3	0.06	14.3	0.06	14.2	0.07	12.9	0.16	12.7	0.18
	>-160°C	14.9	0.04	14.9	0.04	15.0	0.04	14.9	0.04	13.9	0.08	13.3	0.13
C		14.1	0.11	13.9	0.13	14.1	0.11	14.3	0.10	13.2	0.2	12.8	0.26
Voltage ±50 mV		17	(µV) 0.63	16.9	(µV) 0.7	16.1	(µV) 1.2	16.1	(µV) 1.2	14.2	(µV) 4.2	14.1	(µV) 4.6

14.3 Thermocouple Module Operation: ALG306, ALG312 & ALG412

The information in this section applies to all three Thermocouple Input Modules: ALG306, ALG312 and ALG412.

14.3.1 LEDs: ALG306, ALG312 & ALG412

Module **OK** LED indicates module status. The **Field Status** LED indicates whether the external +24 Vdc power supply is present and is above the minimum level and whether or not faults are present. All LEDs are powered from the backplane power bus.

LED	Indication	Meaning
Module OK	Off	Module is not receiving power from the RX3i backplane, or Module has failed self-test.
	Solid Green	Module OK and configured.
	Blinking Green, rapidly	Module performing power-up sequence.
	Blinking Green, slowly	Module has not received configuration from the CPU. If configuration is not successful, Module will continue to blink in this mode.
Field Status	ON Green	No faults on any enabled channel, Terminal Block is present, and field power is present.
	ON Amber and TB Green	Terminal Block is installed, fault on at least one channel, or field power is not present.
	ON Amber and TB Red	Terminal Block not fully removed, field power still detected.
	OFF and TB Red	Terminal block not present and no field power is detected.
TB	ON Red	Terminal block not present or not fully seated. Refer to above.
	ON Green	Terminal block is present. Refer to above.
	OFF	No backplane power to module.

14.3.2 Field Wiring: ALG306, ALG312, & ALG412

The following table lists wiring connections for the Isolated Thermocouple Input Modules. There are no shield terminals. For the 6-Channel module, IC695ALG306, the channel 7 to 12 connections are not used.

Terminal	Assignment (All Modules)
1	No Connect
2	CJC1-IN+
3	CJC1-IN-
4	CH1+
5	CH1-
6	CH2+
7	CH2-
8	CH3+
9	CH3-
10	CH4+
11	CH4-
12	CH5+
13	CH5-
14	CH6+
15	CH6-
16	CJC2 IN+
17	CJC2 IN-
18	No Connect

Figure 367: Field Wiring ALG306, ALG312, ALG412 (Thermocouple/Voltage)

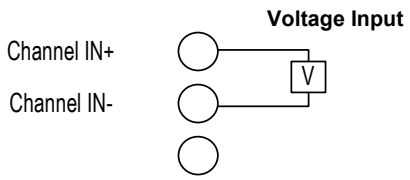

Assignment (ALG312 / ALG412 only)	Terminal
No Connect	19
No Connect	20
No Connect	21
CH7+	22
CH7-	23
CH8+	24
CH8-	25
CH9+	26
CH9-	27
CH10+	28
CH10-	29
CH11+	30
CH11-	31
CH12+	32
CH12-	33
No Connect	34
No Connect	35
No Connect	36

Depending on the Terminal block type chosen, the wire gauge supported ranges from 0.081…1.5 mm^2 (28…14AWG) solid or stranded wire.

Grounding

There are no shield terminals on these modules. For shielding, tie cable shields to the ground bar along the bottom of the backplane. M3 tapped holes are provided in the ground bar for this purpose. **For optimal performance, thermocouple inputs should be ungrounded, and use shielded cable with the shield(s) grounded at Module end.** If a grounded thermocouple is required, a 0.1 uF capacitor from the shield to

the ground bar may be necessary on Module end to eliminate ground noise created from grounding both ends of the shield.

Installing CJC Sensors

When using thermocouple inputs, the use of CJC sensors is recommended. Installing one CJC sensor will greatly improve the accuracy of thermocouple readings. Installing two CJC sensors will provide the highest thermocouple input accuracy for Module. A CJC sensor compensates for offset voltages introduced into the input signal where the thermocouple wires are connected to Module. A set of two CJC sensors is available as part number IC695ACC600.

Under normal circumstances, adding one or both CJC sensors does not affect the channel or module scan times.

The thermistor end of the CJC sensor must be installed in the CJC1 IN+ or CJC2 IN+ terminal for accurate temperature measurements. The gold pin end of the CJC sensor must be installed in the CJC1 IN- or the CJC2 IN- terminal.

Figure 368: Installing Cold Junction Sensor

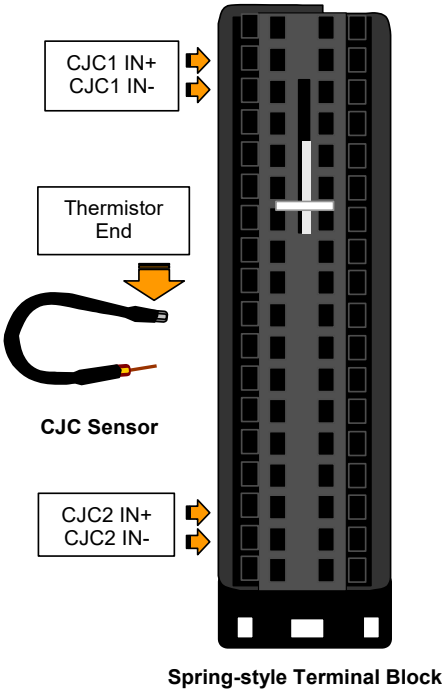

Open the Terminal Block contacts fully before installing the CJC sensor. Insert the sensor into the Terminal Block contact, maintaining metal-to-metal contact between the thermistor and the Terminal Block contact.

For a Box-style Terminal Block, maintain pressure while screwing down the contact.

Note: To use cold junction compensation, CJC scanning must be enabled in the hardware configuration profile of Module.

For each CJC sensor used, the Open Wire diagnostic should be enabled in the CJC Channel configuration. This diagnostic will allow you to detect improper installation or a failed CJC sensor.

14.3.3 Configuration: ALG306, ALG312 & ALG412

Module Parameters: ALG306, ALG312 & ALG412

Parameter	Default	Description
Channel Value Reference Address	%AIxxxxx	Starting address for the input data of Module. This defaults to the next available %AI block.
Channel Value Reference Length	28	The number of words used for the input data of Module. Each channel is mapped to 2 words whether or not the channel is used.
Inputs Default	Force Off	The state of the Channel Value References when Module is not available. Force Off = Channel Values clear to 0. Hold Last State = Channel Values hold their last state.
Diagnostic Reference Address	%Ixxxxx	Starting address for the channel diagnostics status data. This defaults to the next available %I block.
Diagnostic Reference Length	0	The number of bit reference bits required for the Channel Diagnostics data. Default is 0, which means mapping of Channel Diagnostics is disabled. Change this to a non-zero value to enable Channel Diagnostics mapping.
Module Status Reference Address	%Ixxxxx	Starting address for the status data of Module. This defaults to the next available %I block.
Module Status Reference Length	0	The number of bits required for Module Status data. Default is 0, which means mapping of Module Status data is disabled. Change this to a non-zero value to enable Module Status data mapping.
CJC Scan Enable	Disabled	Cold Junction Compensation can be: No Scan, Scan CJC1, Scan CJC2, Scan Both CJCs. Use of these parameters is described below.
Channel Faults w/o Terminal Block	Disabled	Enabled / Disabled: Controls whether channel faults and configured alarm responses will be generated after a Terminal Block removal. The default setting of Disabled means channel faults and alarms are suppressed when the Terminal Block is removed. This parameter does not affect module faults including the Terminal Block loss/add fault generation.
I/O Scan Set	1	Assigns Module I/O status data to a scan set defined in the CPU configuration. Determines how often the RX3i polls the data

CJC Scan Enable

Cold Junction Compensation for Module can be configured as: No Scan, Scan CJC1, Scan CJC2, or Scan Both. Module uses the CJC inputs to compensate for the thermal gradient on the terminal block and adjusts the terminal temperature appropriately.

Compensation Options	Description	CJC1 Scanning	CJC2 Scanning
No Scan	Module assumes 25°C for any thermocouple compensation.	Disabled	Disabled
Scan Both	Highest thermocouple compensation accuracy. Uses both values in thermocouple compensation as explained below.	Enabled	Enabled
Scan CJC1	Module assumes ambient temperature measured by CJC1 for any thermocouple compensation.	Enabled	Disabled
Scan CJC2	Module assumes ambient temperature measured by CJC2 for any thermocouple compensation.	Disabled	Enabled

Channel Parameters: ALG306, ALG312 & ALG412

Parameter	Default	Description
Range Type	Disabled	Voltage, Thermocouple, Disabled
Range	Depends on the configured Range Type	For voltage: -50 to +50 mV, -150 to +150 mV
		For Thermocouple: B, C, E, J, K, N, R, S, T
Channel Value Format	32-bit Floating-point	16-bit integer or 32-bit floating-point
Temperature Units (for Thermocouple Range Type only)	Celsius	Celsius, Fahrenheit
High Scale Value (Eng Units)	The defaults for the Scaling parameters depend on the configured Range Type and Range. Each Range and Range Type has a different set of defaults.	The upper end value, in engineering units, used for scaling. Note: Scaling is disabled if both High Scale Eng. Units equals High Scale A/D Units and Low Scale Eng. Units equals Low Scale A/D Units. Default is High A/D Limit of selected range type.
Low Scale Value (Eng Units)		The lower end value, in engineering units, used for scaling. Default is Low A/D Limit of selected range type. Must be lower than the high scaling value.
High Scale Value (A/D Units)		The upper end value, in A/D units, used for scaling. Default is High A/D Limit of selected range type. Must be greater than the low scaling value.
Low Scale Value (A/D Units)		The lower end value, in A/D units, used for scaling. Default is Low A/D Limit of selected range type.

Input Scaling: ALG306, ALG312 & ALG412

By default, Module converts a voltage or temperature input over the entire span of its configured Range into a floating-point value for the CPU. By modifying one or more of the four channel scaling parameters (Low/High Scale Value parameters) from their defaults, the scaled Engineering Unit range can be changed for a specific application. Scaling can provide inputs to the PLC that are already converted to their physical meaning, or convert input values into a range that is easier for the application to interpret. Scaling is always linear and inverse scaling is possible. All alarm values apply to the scaled Engineering Units value, not to the A/D input value.

The scaling parameters only set up the linear relationship between two sets of corresponding values. They do not have to be the limits of the input.

Example 1

For a voltage input, 60 mV equals a speed of 20 fps, and 10 mV equals 0 fps. The relationship in this range is linear. For this example, the input values should represent speed rather than volts. The following channel configuration sets up this scaling:

High Scale Value (Eng Units) = 20.000

Low Scale Value (Eng Units) = 0.000

High Scale Value (A/D Units) = 60.000

Low Scale Value (A/D Units) = 10.000

Figure 369: Input Scaling Example 1

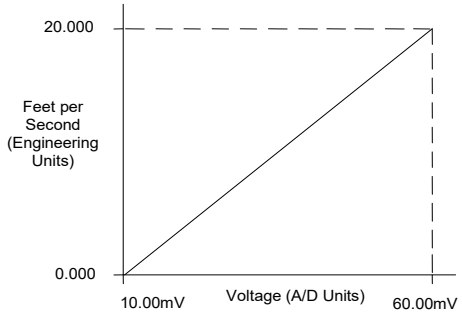

For this example, 10.0 to 60.0 mV is the normal voltage range, but Module will attempt to scale the inputs for a voltage that lies outside the range. If a voltage of 100.0 mV were input to the channel, Module would return a scaled channel value of 36.000. The application should use alarms or take other precautions for scaled inputs that are outside the acceptable range or invalid.

Example 2

An existing application uses traditional analog to digital (A/D) count integer values. With scaling and the optional 16-bit integer input option, a channel can be configured to report integer count values. In this example, the application should interpret +150 mV as 32000 counts and -150 mV as -32000 counts. The following channel configuration will scale a ±150 mV input channel to ±32000 counts.

Channel Value Format = 16-bit Integer

High Scale Value (Eng Units) = 32000

Low Scale Value (Eng Units) = -32000

High Scale Value (A/D Units) = 150.00

Low Scale Value (A/D Units) = -150.00

Figure 370: Input Scaling Example 2

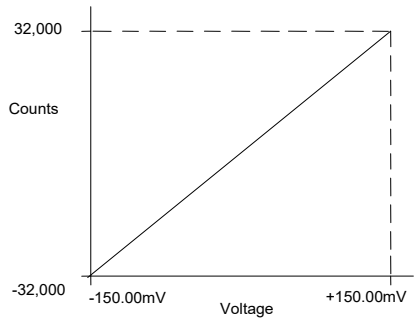

Channel Parameters (Continued)

Parameter	Default	Description
Positive Rate of Change Limit (Eng Units/Second)	0.0	Positive rate of change in Engineering Units per Second, above which will trigger a Positive Rate of Change alarm. Default is disabled. Used with “Rate of Change Sampling Rate” parameter.
Negative Rate of Change Limit (Eng Units)/Second	0.0	Negative rate of change in Engineering Units per Second, below which will trigger a Negative Rate of Change alarm. Default is disabled. Used with “Rate of Change Sampling Rate” parameter.
Rate of Change Sampling Rate (Seconds)	0.0	Time from 0 to 300 seconds to wait between comparisons. Default of 0.0 is to check after every input sample.

Rate of Change Alarms: ALG306, ALG312 & ALG412

A Thermocouple Input module can detect both Negative Rate of Change and Positive Rate of Change in Engineering Units per Second. When either of the Rate of Change parameters is configured to be non-zero, Module takes the difference in Engineering Units between the previous rate of change sample and the current sample, then divides by the elapsed time between samples.

If the Engineering Unit change from the previous sample to current sample is negative, Module compares the rate change with the Negative Rate of Change parameter.

If the Engineering Unit change between samples is positive, Module compares the results in comparing the rate change with the Positive Rate of Change parameter value.

In either case, if the rate of change is greater than the configured rate, a rate of change alarm occurs. The actions taken by Module following the alarm depend on the enabled rate of change actions that have been set up in the "Diagnostic Reporting Enable", "Fault Reporting Enable", and "Interrupts Enabled" parameters.

The Rate of Change Sampling Rate parameter determines how frequently Module compares the Rate of Change. If the Rate of Change Sampling Rate is 0 or any time period less than the channel update rate, Module compares the Rate of Change for every input sample of the channel.

Channel Parameters (Continued)

Parameter	Default	Description
High-High Alarm (Eng Units)	The defaults for the High-High, High, Low, and Low-Low parameters depend on the configured Range Type and Range. Each Range and	**Alarms and Deadbands** All of the alarm parameters are specified in Engineering Units. To use alarming, the A/D Alarm Mode must also be configured as enabled. High-High Alarm and Low-Low Alarm: When the configured value is reached or passed, a Low-Low Alarm or High-High Alarm is triggered. The configured values must be lower than/higher than the corresponding low/high alarm limits.
High Alarm (Eng Units)		
Low Alarm (Eng Units)		
Low-Low Alarm (Eng Units)		

Parameter	Default	Description
High-High Alarm Deadband (Eng Units)	Range Type has a different set of default values.	High Alarm and Low Alarm: When the configured value is reached or below (above), a Low (High) Alarm is triggered. High and Low Alarm Deadbands: A range in Engineering Units above the alarm condition (low deadband) or below the alarm condition (high deadband) where the alarm status bit can remain set even after the alarm condition goes away. For the alarm status to clear, the channel input must fall outside the deadband range. Alarm Deadbands cannot cause the alarm clear to be outside the Engineering Unit User Limits range. For example, if the engineering unit range for a channel is -1000.0 to +1000.0 and a High Alarm is set at +100.0, the High Alarm Deadband value range is 0.0 to 1100.0. A deadband greater than 1100.0 would put the High Alarm clear condition below –1000.0 units making the alarm impossible to clear within the limits.
High Alarm Deadband (Eng Units)		
Low Alarm Deadband (Eng Units)		
User Offset (Eng Units)	0.000	Engineering Units offset to change the base of the input channel. This value is added to the scaled value on the channel prior to alarm checking.
Software Filtering	Disabled	Enable or disable Software Integration Time Filter.
Software Filter Integration Time (ms)	0.000	Specifies the amount of time in milliseconds for the software filter to reach 63.2% of the input value. A value of 0 indicates software filter is disabled. A value of 100 indicates data will achieve 63.2% of its value in 100 ms. Default is disabled
A/D Filter Frequency	4.7Hz	All modules: 2, 3, 4, 4.7, 24, 28 Hz ALG412 only: 8 Hz

Using Alarming: ALG306, ALG312 & ALG412

The Diagnostic Reporting Enable, Fault Reporting Enable, and Interrupt Enable configuration parameters can be used to enable different types of responses for individual channel alarms. By default, all responses are disabled on every channel. Any combination of alarm enables can be configured for each channel.

- If Diagnostic Reporting is enabled, Module reports channel alarms in reference memory at the Diagnostic Reference address configured for that channel.
- If Fault Reporting is enabled, Module logs a fault log in the I/O Fault table for each occurrence of a channel alarm.

- If Interrupts are enabled, an alarm can trigger execution of an Interrupt Block in the application program, as explained below.

Channel Parameters (Continued)

Parameter	Default	Description
Diagnostic Reporting Enable If Diagnostic Reporting is enabled, the additional parameters listed below can be used to enable specific types of alarms.	Disabled	Diagnostic Reporting Enable options are used to enable reference memory reporting of alarms into the Diagnostic Reference area. Fault Reporting Enable options enable fault logging of alarms into the I/O Fault Table. Interrupts Enable options enable I/O Interrupt trigger when alarm conditions occur. These parameters enable or disable the individual diagnostics features of a channel. When any of these parameters is enabled, Module uses associated parameters to perform the enabled feature. For example, if Over Range is enabled in the "Diagnostic Reporting Enable" menu, Module will set the Over Range bit in the Diagnostic Reference for the channel. If any of these parameters is disabled, Module does not react to the associated alarm conditions. For example, if Low Alarm Enable is set to Disabled in the "Fault Reporting Enable" menu, the Low Alarm fault is not logged in the I/O Fault Table when Low Alarm is detected on the channel.
Fault Reporting Enable If Fault Reporting is enabled, the additional parameters listed below can be used to enable specific types of Faults.	Disabled	
Interrupts Enable If Interrupts are enabled, the additional parameters listed below can be used to enable specific types of Interrupts.	Disabled	
Low Alarm Enable	Disabled	
High Alarm Enable	Disabled	
Under Range Enable	Disabled	
Over Range Enable	Disabled	
Open Wire Enable	Disabled	
Low-Low Alarm Enable	Disabled	
High-High Alarm Enable	Disabled	
Negative Rate of Change Detection Enable	Disabled	
Positive Rate of Change Detection Enable	Disabled	

Using Interrupts: ALG306, ALG312 & ALG412

To properly configure an I/O Interrupt, the Interrupt enable bit or bits must be set in the configuration profile of Module. In addition, the program block that should be executed in response to the channel interrupt must be mapped to the reference address configured for that channel.

Example

In this example, the Channel Values Reference Address block is mapped to %AI0001-%AI0020. An I/O Interrupt block should be triggered if a High Alarm condition occurs on channel 2.

- Configure the High-Alarm condition.
- Set the High-Alarm Interrupt Enable flag for Channel 2 in Module configuration.

The reference address for Channel 2 corresponds to %AI00003 (2 Words per channel), so the interrupt program block Scheduling properties should be set for the "I/O Interrupt" Type and "%AI0003" as the Trigger.

Note on Using Interrupts

These modules have separate enable/disable options for Diagnostic Reporting and Interrupts. Normally, disabling a diagnostic (such as Low/High Alarm or Over/Under range) in the configuration means that its diagnostic bit is never set. However, if interrupts are enabled for a condition and that interrupt occurs, the diagnostic bit for that condition is also set during the I/O Interrupt block logic execution. The next PLC input scan always clears this interrupt status bit back to 0, because Diagnostic Reporting has it disabled.

CJC Parameters

Parameter	Default	Description
Channel Value Format	32-bit floating-point	16-bit integer in 32-bit field, or 32-bit floating-point
Temperature Units	Celsius	Celsius, Fahrenheit
User Offset (Temperature Units)	0.0	Temperature offset added to CJC values. For Celsius: –25°C to +25°C For Fahrenheit: -45°F to +45°F
Diagnostic Reporting Enable If Diagnostic Reporting is enabled, the additional parameters listed below can be used to enable specific types of alarms.	Disabled	*Diagnostic Reporting Enable* options are used to enable reference memory reporting of alarms into the Diagnostic Reference area. *Fault Reporting Enable* options enable fault logging of alarms into the I/O Fault Table. *Interrupts Enable options* enable I/O Interrupt trigger when alarm conditions occur. These parameters enable or disable the individual diagnostics features of a channel. When any of these parameters is enabled, Module uses associated parameters to perform the enabled feature. For example, if Over Range is enabled in the "Diagnostic Reporting Enable" menu, Module will set the Over Range bit in the Diagnostic Reference for the channel. If any of these parameters is disabled, Module does not react to the associated alarm conditions. For example, if Low Alarm Enable is set to Disabled in the "Fault Reporting Enable" menu, the Low Alarm fault is not logged in the I/O Fault Table when Low Alarm is detected on the channel.
Fault Reporting Enable If Fault Reporting is enabled, the additional parameters listed below can be used to enable specific types of Faults.	Disabled	
Interrupts Enable If Interrupts are enabled, the additional parameters listed below can be used to enable specific types of Interrupts.	Disabled	
Under Range Enable	Disabled	
Over Range Enable	Disabled	
Open Wire Enable	Disabled	

14.3.4 Module Data: ALG306, ALG312 & ALG412

Module reports its input channel data in its assigned input words, beginning at the configured Channel Value Reference Address. Each channel occupies 2 words (whether the channel is used or not):

Channel Value Reference Address	Contains this Input	Channel Value Reference Address (ALG312 / ALG412 Only)	Contains this Input
+0, 1	Channel 1	+16, 17	Channel 9
+2, 3	Channel 2	+18, 19	Channel 10
+4, 5	Channel 3	+20, 21	Channel 11
+6, 7	Channel 4	+22, 23	Channel 12
+8, 9	Channel 5	+24, 25	CJC1
+10, 11	Channel 6	+26, 27	CJC2
+12, 13	CJC1 (IC695ALG306) Channel 7 (IC695ALG312)		
+14, 15	CJC2 (IC695ALG306) Channel 8 (IC695ALG312)		

Depending on its configured Channel Value Format, each enabled channel reports a 32-bit floating-point or 16-bit integer value to the CPU.

In the 16-bit integer mode, low word of the 32-bit channel data area contains the 16-bit integer channel value. The high word (upper 16-bits) of the 32-bit value are set with the sign extension of the 16-bit integer. This sign-extended upper word allows the 16-bit integer to be read as a 32-bit integer type in logic without losing the sign of the integer. If the 16-bit integer result is negative, the upper word in the 32-bit channel data has the value 0xFFFF. If the 16-bit integer result is positive, the upper word is 0x0000.

Channel Diagnostic Data: ALG306, ALG312 & ALG412

In addition to the input data from field devices, Module can be configured to report channel diagnostics status data to the CPU. The CPU stores this data at the *Diagnostic Reference Address* configured for Module. Use of this feature is optional. The diagnostics data for each channel occupies 2 words (whether the channel is used or not):

Diagnostic Reference Address	Contains Diagnostic Data for:	Diagnostic Reference Address (ALG312/ALG412 Only)	Contains Diagnostics Data for:
+0, 1	Channel 1	+16, 17	Channel 9
+2, 3	Channel 2	+18, 19	Channel 10
+4, 5	Channel 3	+20, 21	Channel 11
+6, 7	Channel 4	+22, 23	Channel 12
+8, 9	Channel 5	+24, 25	CJC1
+10, 11	Channel 6	+26, 27	CJC2
+12, 13	CJC1 (ALG306) Channel 7 (ALG312/ALG412)		
+14, 15	CJC2 (ALG306) Channel 8 (ALG312/ALG412)		

When a diagnostic bit equals 1, the alarm or fault condition is present on the channel. When a bit equals 0 the alarm or fault condition is either not present or detection is not enabled in the configuration for that channel. For each channel, the format of this data is:

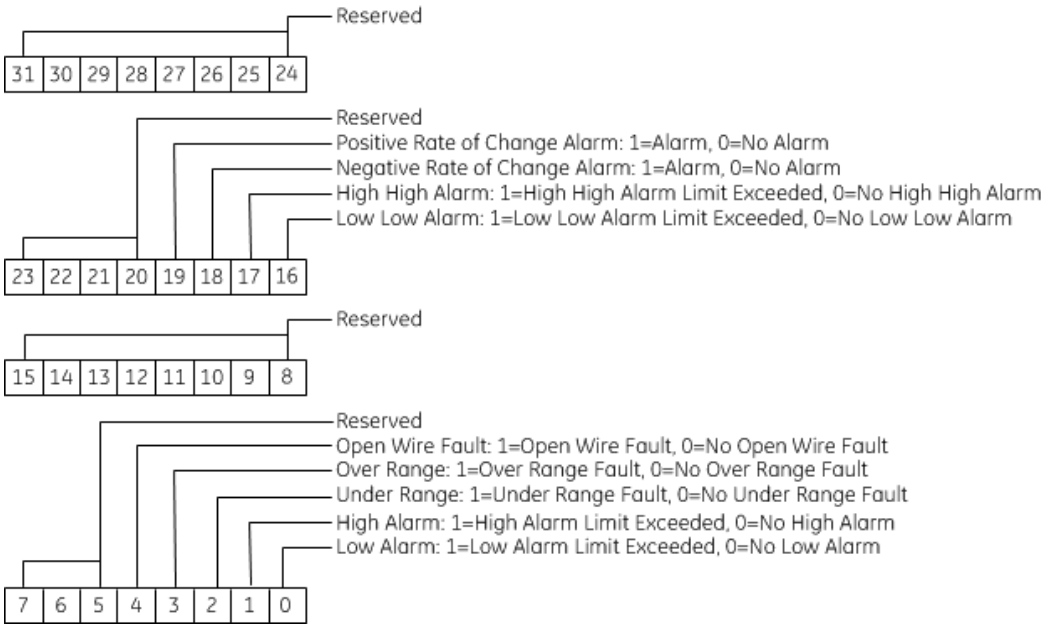

Module Status Data: ALG306, ALG312 & ALG412

Module can also optionally be configured to return two bits of module status data to the CPU. The CPU stores this data in the 32-bit *Module Status Data* reference area configured for Module.

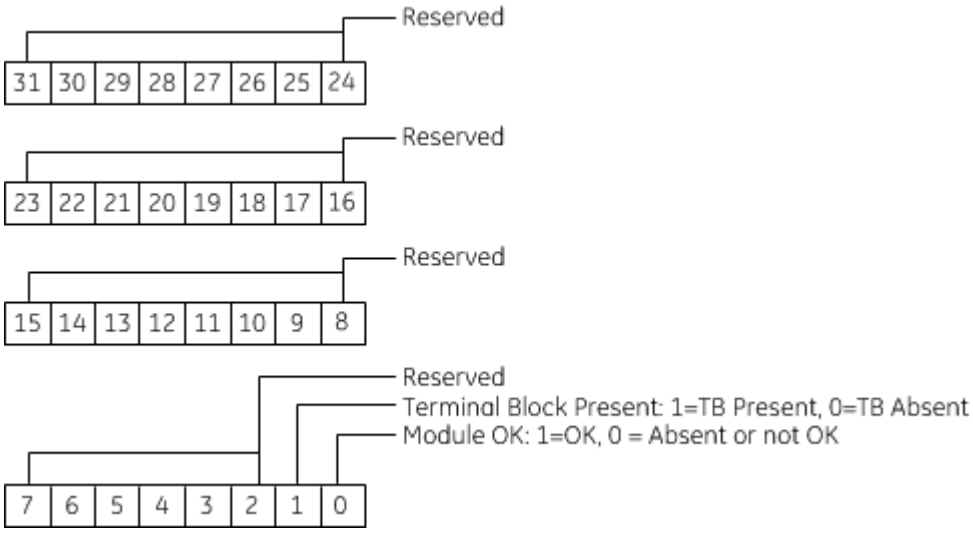

Terminal Block Detection

Module automatically checks for the presence of a Terminal Block.

The TB LED indicates the state of the terminal block of Module. It is green when the Terminal Block is present or red if it is not.

Faults are automatically logged in the CPU I/O Fault table when the terminal block is inserted or removed from a configured module in the system. The fault type is Field Fault and the fault description indicates whether the fault is a "Loss of terminal block" or an "Addition of terminal block." If a Terminal Block is not present while a configuration is being stored, a "Loss of terminal block" fault is logged.

Bit 1 of Module Status Reference indicates the status of the terminal block. To enable Module Status reporting, Module Status Reference must be configured. During operation, the PLC must be in an I/O Enabled mode for the current Module Status to be scanned and updated in reference memory.

Section 15: RTD Input Module

This chapter describes the following RTD input module for PACSystems RX3i controllers.

RTD Module Description	Catalog Number	Section
RTD Input 8-Channel Isolated Module	IC695ALG508	15.1

15.1 RTD Input 8-Channel Isolated Module IC695ALG508

The ***RTD Input*** module, IC695ALG508, provides eight isolated differential RTD input channels. Each channel can be individually configured for:

RTD Inputs:	50, 100, 200, 500, and 1000 Ω Pt 385
	50, 100, 200, 500, and 1000 Ω Pt 391.6
	100, 200, 500, and 1000 Ω Ni 618
	120 Ω Ni 672
	604 Ω NiFe 518
	10, 50 and 100 Ω Cu 426
Resistance Inputs:	250, 500, 1000, 2000, 3000, and 4000 Ω

Figure 371: IC695ALG508

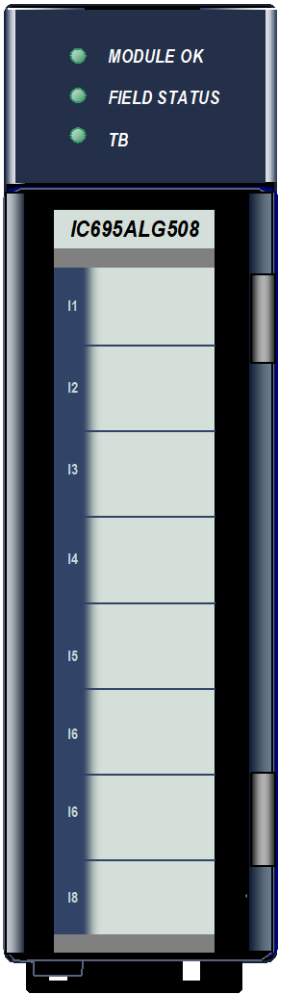

15.1.1 Features

- Completely software-configurable, no module jumpers to set
- RTD Linearization based on ITS-90
- 32-bit IEEE floating-point or 16-bit integer (in 32-bit field) input data format selectable per channel
- Temperature units selectable in °C and °F
- User Scaling
- Programmable notch filter from 2.3Hz to 28Hz per channel
- Under range/Over range alarm detection and reporting by channel
- Alarm dead band for high alarm, low alarm, high-high alarm, and low-low alarm by channel
- Wire-off (open circuit) condition support for all inputs.
- Module fault status reporting (Watchdog, Ram Fail, Flash Fail)
- Module identity and status reporting including LED status indicators
- Support for 2, 3, or 4-wire RTD types for each channel.
- For Resistance inputs, fixed 2-wire measurement mode.
- Periodic Lead Resistance compensation measurement update enable/disable control for 3-wire RTDs. When enabled, Module will switch to measure the lead resistance once every 100 samples, and will use this value for the next 100 samples.
- RTD user offset support for all channels
- Terminal Block detection switch.
- Module must be located in an RX3i Universal Backplane.
- Module supports insertion into and removal from an RX3i Universal Backplane which is under power. Refer to *Hot Insertion and Removal*.

This module can be used with a Box-style (IC694TBB032), Extended Box-style (IC694TBB132), Spring-style (IC694TBS032), or Extended Spring-style (IC694TBS132) Terminal Block. Extended terminal blocks provide the extra shroud depth needed for shielded wiring. Terminal Blocks are ordered separately.

15.1.3 LEDs: ALG508

Module **OK** LED indicates module status. The **Field Status** LED indicates whether the external +24 Vdc power supply is present and is above the minimum level and whether or not faults are present. All LEDs are powered from the backplane power bus.

LED	Indication	Meaning
Module OK	Off	Module is defective or no backplane power present
	Solid Green	Module OK and configured
	Blinking Green, rapidly	Module performing power-up sequence
	Blinking Green or Amber, slowly	Module OK but not configured.
Field Status	ON Green	No faults on any enabled channel, Terminal Block is present, and field power is present.
	ON Amber and TB Green	Terminal Block is installed, fault on at least one channel, or field power is not present.
	ON Amber and TB Red	Terminal Block not fully removed, field power still detected.
	OFF and TB Red	Terminal block not present and no field power is detected.
TB	ON Red	Terminal block not present or not fully seated. Refer to above.
	ON Green	Terminal block is present. Refer to above.
	OFF	No backplane power to module.

15.1.4 Specifications: ALG508

Specification	Description		
Number of Channels	8		
Measuring method selectable per channel	RTD/resistance: up to 4 kΩ		
RTD input types	50, 100, 200, 500, and 1000 Ω Platinum 385 (IEC751 1983, Amend 2 1995; JISC 1604 1997) 50, 100, 200, 500, and 1000 Ω Platinum 391.6 (JISC 1604: 1981) 100, 200, 500, and 1000 Ω Nickel 618 (DIN 43760 Sept. 1987) 120Ω Nickel 672 (MINCO Application Aid #18, 5/90 Type Ni) 10, 50, and 100 Ω Copper 426 (SAMA RC21-4-1966) 604 Ω Nickel-Iron 518		
Resistance Input Types	0-260, 0-525, 0-1050, 0-2100, 0-3150, 0-4200 Ω		
Maximum RTD Lead Resistance	25 Ω each side, for a total of 50 Ω.		
RTD and Resistance Input Types	**Input Type**	**Resistance Range Supported (Ω)**	**Excitation Current**
	Resistance	0-260, 0-525	0.717 mA
		0-1050, 0-2100, 0-3150, 0-4200	0.238 mA
	Platinum 385	50	1.175 mA
		100	0.717 mA
		200, 500, 1000	0.238 mA
	Platinum 391.6	50	1.175 mA
		100, 200	0.717 mA
		500, 1000	0.238mA
	Nickel 672	120	0.717 mA
	Nickel 618	100,200	0.717 mA
		500,1000	0.238 mA
	Nickel-Iron 518	604	0.238 mA
	Copper 426	10	1.654 mA
		50, 100	1.175 mA
RTD Ranges	RTD Type	Low temp (°C)	High temp (°C)
	Copper 426	-100.0	+260.0
	Nickel 618	-100.0	+260.0
	Nickel 672	-80.0	+260.0
	Nickel-Iron 518	-100.0	+200.0
	Platinum 385	-200.0	+850.0
	Platinum 391.6	-200.0	+630.0
Temperature accuracy for inputs from 4-wire RTDs over	**RTD Type**	**+25°C**	**0 to +60°C**
	50 Ω Platinum 385	±1.0°C	±1.7°C

Specification	Description		
temperature span (2.3, 4, and 4.7 Hz filters). This data does do not include the RTD sensor accuracy, which must be included when determining the overall system performance. Three-wire RTDs have similar accuracies, but depend on the lead resistances being balanced. For 2-wire RTDs, the lead resistance of the RTD contributes to the temperature error. All tolerances double when 24 or 28 Hz filters are used	100 Ω Platinum 385	±0.7°C	±1.2°C
	200 Ω Platinum 385	±0.6°C	±1.0°C
	500 Ω Platinum 385	±0.5°C	±0.9°C
	1000 Ω Platinum 385	±0.5°C	±0.9°C
	100 Ω Platinum 391.6	±0.6°C	±1.1°C
	200 Ω Platinum 391.6	±0.5°C	±0.9°C
	500 Ω Platinum 391.6	±0.4°C	±0.8°C
	1000 Ω Platinum 391.6	±0.4°C	±0.8°C
	Nickel 672	±0.3°C	±0.5°C
	Nickel 618	±0.3°C	±0.5°C
	Nickel-Iron 518	±0.4°C	±0.7°C
	10 Ω Copper 426	±1.0°C	±2.4°C
	50 Ω Copper 426	±0.8°C	±1.9°C
	100 Ω Copper 426	±0.8°C	±1.9°C
Temperature accuracy for Resistance inputs	**Resistance**	**+25°C**	**0 to +60°C**
	250 Ω	±0.25 Ω	±0.35 Ω
	500 Ω	±0.3 Ω	±0.45 Ω
	1000 Ω	±0.5 Ω	±0.8 Ω
	2000 Ω	±0.9 Ω	±1.5 Ω
	3000 Ω	±1.3 Ω	±2.2 Ω
	4000 Ω	±1.7 Ω	±2.9 Ω
Measurement Units	Degrees C or F, or Ω		
Repeatability	0.05% of span at a constant temperature over a 30-second period (0.1% for 10 Ω copper, 28 Hz filter)		
Diagnostics reported to the controller	User configurable for Over Range, Under Range, High and Low Alarm, High-high and Low-low alarm, Open Circuit Detection, Positive and Negative Rate of change alarm		
Service Requests	Report module firmware revision		
Hot-Swap	Supports removal and replacement under power		
Calibration	Module should be field calibrated via the configuration software.		
Channel-to-channel crosstalk	70 dB minimum at 120 mS update rate for all channels		
Common Mode Rejection	2.3 Hz filter, 50/60 Hz: 100 dB for 4-wire, 90 dB for 2- and 3-wire 4 Hz filter, 50/60 Hz: 100 dB 4.7 Hz filter, 50/60 Hz: 100 dB 24 Hz, 28 Hz filter 50/60 Hz: 80 dB		
Default or Hold Last State	For each of fault and disabled modes, the configuration will specify either to default a channel input to 0 or hold the last state of the input		

Specification		Description	
Fault Reporting		The configuration can enable or disable fault reporting for either of under or over range alarm, open circuit, and rate of change alarm.	
Rate of change		For each channel, the configuration can enable/disable and specify a positive and negative rate of change alarms.	
Channel Value Format		16-bit integer (in a 32-bit field) or 32-bit real number data for each channel.	
Power Consumption		ALG508-CA and earlier: 3.3 Vdc: 400 mA; 5.0 Vdc: 200 mA	
		ALG508-DB and later: 3.3 Vdc: 315 mA; 5.0 Vdc: 120 mA	
Excitation Current		0.238mA-1.654 mA, depending on the input range.	
Power Dissipation		2.5 W max	
Isolation Voltage (Field to Backplane and Channel to Channel)		250 Vac Continuous 1500 Vac 1 minute 2550 Vdc 1 second	
Normal Mode Noise Rejection		2.3 Hz filter, 50 Hz: 67 dB 2.3 Hz filter, 60 Hz: 67 dB 4.0 Hz filter, 50 Hz: 80 dB 4.7 Hz filter, 60 Hz: 80 dB 24 Hz filter, 50 Hz: 25 dB 28 Hz filter, 60 Hz: 25 dB	
Filter Settings, Update Times, Rejection, and Resolution	**Filter Frequency (-3 dB frequency)**	**Update Time (ms)**	**Normal Mode Rejection at 50/60 Hz**
	2.3 Hz	120 (130 max)	67 dB at 50/60 Hz
	4.0 Hz	70 (80 max)	80 dB at 50 Hz
	4.7 Hz	60 (70 max)	80 dB at 60 Hz
	24.0 Hz	20 (30 max)	25 dB at 50 Hz
	28.0 Hz	15 (25 max)	25 dB at 60 Hz

Update Time: ALG508

Module update time (refer to above) assumes all channels are configured with the same parameters. If channels are configured differently, Module update time corresponds to the slowest channel update time chosen. Update Time is the time required for Module to sample and convert the input signals to provide the resulting data values to the processor. The channel times include channel scan time and filter delay time.

Module Resolution: ALG508

Module resolution depends on the input type and the filter chosen. The following table summarizes the effective resolution for Module by filter chosen, and input type selected for 2- or 4-wire modes. If a 3-wire mode is used, the resolution values shown are reduced by 1.2 bits. If integer format is used, the resolution is limited to 16 bits.

	Filter Setting / Resolution							
RTD Type	**2.3 Hz**		**4.0 Hz and 4.7 Hz**		**24 Hz**		**28 Hz**	
	Bits[88]	**m°C**	**Bits[88]**	**m°C**	**Bits[88]**	**m°C**	**Bits[88]**	**m°C**
Platinum 385	16.5	13.2	16.3	15.2	13.4	113	12.8	172
Platinum 391.6	16.5	10.6	16.3	12.2	13.4	91.0	12.8	138
Nickel 672	16.5	5.2	16.3	6.0	13.4	44.7	12.8	67.8
Nickel 618	16.2	7.3	16.0	8.3	13.1	56.2	12.5	94.3
Nickel-Iron 518	16.5	5.7	16.3	6.5	13.4	48.6	12.8	73.7
Copper 426								
10 Ω	13.6	29.0	13.4	33.3	10.5	249	9.9	377
50 Ω	15.6	7.8	15.4	8.9	12.5	66.5	11.9	101
100 Ω	16.2	5.2	16.0	5.9	13.1	44.3	12.5	67.2
Resistance	**Bits**	**mΩ**	**Bits**	**mΩ**	**Bits**	**mΩ**	**Bits**	**mΩ**
250	16.6	2.6	16.4	3.0	13.5	22.4	12.9	34.0
500	16.6	5.3	16.4	6.1	13.5	45.3	12.9	68.7
1000	16.6	10.6	16.4	12.1	13.5	90.6	12.9	137
2000	17.0	16.0	16.8	18.4	13.9	137	13.3	208
3000	16.6	31.7	16.4	36.4	13.5	272	12.9	412
4000	17.0	32.0	16.8	36.8	13.9	275	13.3	416

[88] *The effective number of bits is based on the full-scale range of the input type.*

15.1.6 Field Wiring: ALG508

Terminal	Assignment	Assignment	Terminal
1	No Connect	No Connect	19
2	RTD 1 Exc	RTD 5 Exc	20
3	RTD 1 In +	RTD 5 In +	21
4	RTD 1 In -	RTD 5 In -	22
5	RTD 1 Rtn	RTD 5 Rtn	23
6	RTD 2 Exc	RTD 6 Exc	24
7	RTD 2 In +	RTD 6 In +	25
8	RTD 2 In -	RTD 6 In -	26
9	RTD 2 Rtn	RTD 6 Rtn	27
10	RTD 3 Exc	RTD 7 Exc	28
11	RTD 3 In +	RTD 7 In +	29
12	RTD 3 In -	RTD 7 In -	30
13	RTD 3 Rtn	RTD 7 Rtn	31
14	RTD 4 Exc	RTD 8 Exc	32
15	RTD 4 In +	RTD 8 In +	33
16	RTD 4 In -	RTD 8 In -	34
17	RTD 4 Rtn	RTD 8 Rtn	35
18	No Connect	No Connect	36

The pinout is set up for two, three, or four-wire RTD sensors. No additional jumper or shorting wires are needed for wiring in any of the three modes. Connect the RTD sensor as shown:

Figure 372: Field Wiring for RTDs ALG508

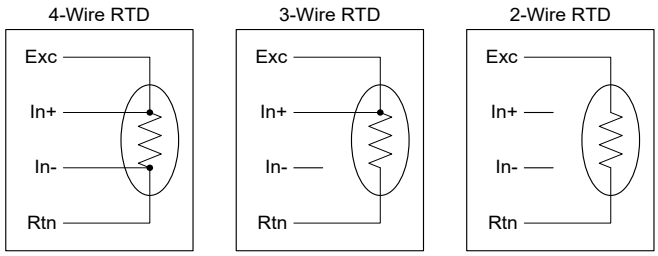

Depending on the Terminal block type chosen, the wire gauge supported ranges from .081...1.5 mm^2 (28...14AWG) solid or stranded wire.

Grounding

There are no shield terminals on these modules. For shielding, tie cable shields to the ground bar along the bottom of the backplane. M3 tapped holes are provided in the ground bar for this purpose. **For optimal performance, RTD inputs should be ungrounded, and use a shielded cable with the shield(s) grounded at Module end.** If a grounded thermocouple is required, a 0.1 uF capacitor from the shield to the ground bar may be necessary on Module end to eliminate ground noise created from grounding both ends of the shield.

15.1.7 Configuration: ALG508

Module Parameters

Parameter	Default	Description
Channel Value Reference Address	%AIxxxxx	The starting address for the input data of this module. This defaults to the next available %AI block.
Inputs Default	Force Off	In the event of module failure or removal, this parameter specifies the state of the Channel Value References. Force Off = Channel Values clear to 0. Hold Last State = Channel Values hold their last state.
Channel Value Reference Length		The number of words used for the input data of this module.
Diagnostic Reference Address	%Ixxxxx	The starting address for the channel diagnostics status data. This defaults to the next available %I block.
Diagnostic Reference Length	0	The number of bit reference bits required for the Channel Diagnostics data. Default is 0, which means the mapping of Channel Diagnostics is disabled. Change this to a non-zero value to enable Channel Diagnostics mapping.
Module Status Reference Address	%Ixxxxx	The starting address for the status data of this module. This defaults to the next available %I block.
Module Status Reference Length	0	The number of bits required for Module Status data. Default is 0, which means mapping of Module Status data is disabled. Change this to a non-zero value to enable Module Status data mapping.
Channel Faults w/o Terminal Block	Disabled	Enabled / Disabled: Controls whether channel faults and configured alarm responses will be generated after a Terminal Block removal. The default setting of Disabled means channel faults and alarms are suppressed when the Terminal Block is removed. This parameter does not affect module faults including the Terminal Block loss/add fault generation.
I/O Scan Set	1	Assigns Module I/O status data to a scan set defined in the CPU configuration. Determines how often the RX3i polls the data

Channel Parameters

Parameter	Default	Description
Range Type	Disabled	RTD, Resistance, Disabled
Range		For resistance: 0-250, 0-500, 0-1000, 0-2000, 0-3000, 0-4000 Ω
		For RTD: 50, 100, 200, 500, and 1000 Ω Pt 385 50, 100, 200, 500, and 1000 Ω Pt 391.6 100, 200, 500, and 1000 Ω Ni 618 120 Ω Ni 672 604 Ω NiFe 518 10, 50, and 100 Ω Cu 426
Channel Value Format	32-bit Floating-point	16-bit integer or 32-bit floating-point
RTD	RTD 2 Wire	(for RTD Range Type only) RTD 2, 3 or 4 Wire
RTD Lead Resistance Compensation	Enabled	(for RTD Range Type only) Enabled, Disabled
Temperature Units	Celsius	Celsius, Fahrenheit
High Scale Value (Eng Units)	The defaults for the Scaling parameters depend on the configured Range Type and Range. Each Range and Range Type have a different set of defaults.	Note: Scaling is disabled if both High Scale Eng. Units equal High Scale A/D Units and Low Scale Eng. Units equal Low Scale A/D Units. Default is a High A/D Limit of the selected range type.
Low Scale Value (Eng Units)		Default is Low A/D Limit of the selected range type. Must be lower than the high scaling value.
High Scale Value (A/D Units)		Default is a High A/D Limit of the selected range type. Must be greater than the low scaling value.
Low Scale Value (A/D Units)		Default is Low A/D Limit of the selected range type.

Input Scaling: ALG508

By default, Module converts a voltage or temperature input over the entire span of its configured Range into a floating-point value for the CPU. By modifying one or more of the four-channel scaling parameters (Low/High Scale Value parameters) from their defaults, the scaled Engineering Unit range can be changed for a specific application. Scaling can provide inputs to the PLC that are already converted to their physical meaning, or convert input values into a range that is easier for the application to interpret. Scaling is always linear and inverse scaling is possible. All alarm values apply to the scaled Engineering Units value, not to the A/D input value.

The scaling parameters only set up the linear relationship between two sets of corresponding values. They do not have to be the limits of the input.

Example

For a resistance input, 600 Ω corresponds to a weight of 20 kg, and 100 Ω corresponds to a weight of 0 kg. The relationship in this range is linear. For this example, the input values should represent weight rather than resistance measured in ohms. The following channel configuration sets up this scaling:

High Scale Value (Eng Units) = 20.000

Low Scale Value (Eng Units) = 0.000

High Scale Value (A/D Units) = 600.0

Low Scale Value (A/D Units) = 100.0

Figure 373: Input Scaling Example

ALG508

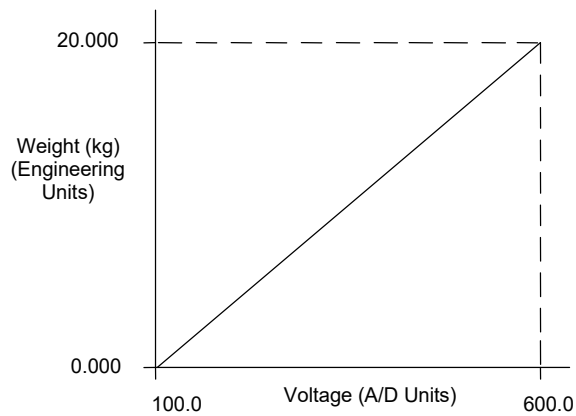

For this example, 100 to 600 Ω is the normal resistance range, but Module will attempt to scale the inputs for a resistance that lies outside the range. If resistance of 1000 Ω were input to the channel, Module would return a scaled channel value of 36.000. The application should use alarms or take other precautions for scaled inputs that are outside the acceptable range or invalid.

Channel Parameters (Continued)

Parameter	Default	Description
Positive Rate of Change Limit (Eng Units)	0.000	Rate of change in Engineering Units per Second that will trigger a Positive Rate of Change alarm. Default is disabled. Used with “Rate of Change Sampling Rate” parameter.

Negative Rate of Change Limit (Eng Units)	0.000	Rate of change in Engineering Units per Second that will trigger a Negative Rate of Change alarm. Default is disabled. Used with “Rate of Change Sampling Rate” parameter.
Rate of Change Sampling Rate	0.000	Time from 0 to 300 seconds to wait between comparisons. The default of 0.0 is to check after every input sample.

Rate of Change Alarms: ALG508

An RTD Input module can detect both Negative Rate of Change and Positive Rate of Change in Engineering Units per Second. When either of the Rate of Change parameters is configured to be non-zero, Module takes the difference in Engineering Units between the previous rate of change sample and the current sample, then divides by the elapsed time between samples.

If the Engineering Unit change from the previous sample to the current sample is negative, Module compares the rate change with the Negative Rate of Change parameter.

If the Engineering Unit change between samples is positive, Module compares the results in comparing the rate change with the Positive Rate of Change parameter value.

In either case, if the rate of change is greater than the configured rate, a rate of change alarm occurs. The actions taken by Module following the alarm depend on the enabled rate of change actions that have been set up in the "Diagnostic Reporting Enable", "Fault Reporting Enable", and "Interrupts Enabled" parameters.

The Rate of Change Sampling Rate parameter determines how frequently Module compares the Rate of Change. If the Rate of Change Sampling Rate is 0 or any time period less than the channel update rate, Module compares the Rate of Change for every input sample of the channel.

Channel Parameters (Continued)

Parameter	Default	Description
High-High Alarm (Eng Units)	The defaults for the High-High, High, Low, and Low-Low	**Alarms and Deadbands**

Parameter	Default	Description
High Alarm (Eng Units)	parameters depend on the configured Range Type and Range. Each Range and Range Type has a different set of default values.	All of the alarm parameters are specified in Engineering Units. To use alarming, the A/D Alarm Mode must also be configured as enabled. High-High Alarm and Low-Low Alarm: When the configured value is reached or passed, a Low-Low Alarm or High-High Alarm is triggered. The configured values must be lower than/higher than the corresponding low/high alarm limits. High Alarm and Low Alarm: When the configured value is reached or below (above), a Low (High) Alarm is triggered. High and Low Alarm Deadbands: A range in Engineering Units above the alarm condition (low deadband) or below the alarm condition (high deadband) where the alarm status bit can remain set even after the alarm condition goes away. For the alarm status to clear, the channel input must fall outside the deadband range. Alarm Deadbands should not cause the alarm clear to be outside the Engineering Unit User Limits range. For example, if the engineering unit range for a channel is -1000.0 to +1000.0 and a High Alarm is set at +100.0, the High Alarm Deadband value range is 0.0 to less than 1100.0. A deadband of 1100.0 or more would put the High Alarm clear condition below –1000.0 units making the alarm impossible to clear within the limits.
Low Alarm (Eng Units)		
Low-Low Alarm (Eng Units)		
High-High Alarm Deadband (Eng Units)		
High Alarm Deadband (Eng Units)		
Low Alarm Deadband (Eng Units)		
User Offset	0.000	Engineering Units offset to change the base of the input channel. This value is added to the scaled value on the channel prior to alarm checking.
Software Filter Integration Time in milliseconds.	0.000	Specifies the amount of time in milliseconds for the software filter to reach 63.2% of the input value. A value of 0 indicates the software filter is disabled. A value of 100 indicates data will achieve 63.2% of its value in 100 ms. Default is disabled
A/D Filter Frequency		2, 3, 4, 4.7, 24, 28 Hz
Diagnostic Reporting Enable If Diagnostic Reporting is enabled, the additional parameters listed below can be used to enable specific types of alarms.	Disabled	Diagnostic Reporting Enable options are used to enable reference memory reporting of alarms into the Diagnostic Reference area. Fault Reporting Enable options enable fault logging of alarms into the I/O Fault Table. Interrupts Enable options to enable I/O Interrupt to trigger when alarm conditions occur. These parameters enable or disable the individual diagnostics features of a channel.

Parameter	Default	Description
Fault Reporting Enable If Fault Reporting is enabled, the additional parameters listed below can be used to enable specific types of Faults.	Disabled	When any of these parameters is enabled, Module uses associated parameters to perform the enabled feature. For example, if Over Range is enabled in the “Diagnostic Reporting Enable” menu, Module will set the Over Range bit in the Diagnostic Reference for the channel. If any of these parameters is disabled, Module does not react to the associated alarm conditions. For example, if Low Alarm Enable is set to Disabled in the “Fault Reporting Enable” menu, the Low Alarm fault is not logged in the I/O Fault Table when Low Alarm is detected on the channel.
Interrupts Enable If Interrupts are enabled, the additional parameters listed below can be used to enable specific types of Interrupts.	Disabled	
Low Alarm Enable	Disabled	
High Alarm Enable	Disabled	
Under Range Enable	Disabled	
Over Range Enable	Disabled	
Open Wire Enable	Disabled	
Calibration Fault Enable	Disabled	
Low-Low Alarm Enable	Disabled	
High-High Alarm Enable	Disabled	
Negative Rate of Change Detection Enable	Disabled	
Positive Rate of Change Detection Enable	Disabled	

Using Alarming: ALG508

The Diagnostic Reporting Enable, Fault Reporting Enable, and Interrupt Enable configuration parameters can be used to enable different types of responses for individual channel alarms. By default, all responses are

disabled on every channel. Any combination of alarm enables can be configured for each channel.

- If Diagnostic Reporting is enabled, Module reports channel alarms in reference memory at the Diagnostic Reference address configured for that channel.
- If Fault Reporting is enabled, Module logs a fault log in the I/O Fault table for each occurrence of a channel alarm.
- If Interrupts are enabled, an alarm can trigger the execution of an Interrupt Block in the application program, as explained below.

Using Interrupts: ALG508

To properly configure an I/O Interrupt, the Interrupt enables bit or bits must be set in the configuration profile of this module. In addition, the program block that should be executed in response to the channel interrupt must be mapped to the reference address configured for that channel.

Example

In this example, the Channel Values Reference Address block is mapped to %AI0001-%AI0020. An I/O Interrupt block should be triggered if a High Alarm condition occurs on channel 2.

- Configure the High-Alarm condition.
- Set the High-Alarm Interrupt Enable flag for Channel 2 in Module configuration.

The reference address for Channel 2 corresponds to %AI00003 (2 Words per channel), so the interrupt program block Scheduling properties should be set for the "I/O Interrupt" Type and "%AI0003" as the Trigger.

Note on Using Interrupts

These modules have separate enable/disable options for Diagnostic Reporting and Interrupts. Normally, disabling a diagnostic (such as Low/High Alarm or Over/Under range) in the configuration means that its diagnostic bit is never set. However, if interrupts are enabled for a condition and that interrupt occurs, the diagnostic bit for that condition is also set during the I/O Interrupt block logic execution. The next PLC input scan always clears this interrupt status bit back to 0, because Diagnostic Reporting has it disabled.

15.1.8 Module Input Data: ALG508

Module reports its input channel data in its assigned input words, beginning at the configured Channel Value Reference Address. Each channel occupies two words (whether the channel is used or not):

Channel Value Reference Address	Contains this Input
+0, 1	Channel 1
+2, 3	Channel 2
+4, 5	Channel 3
+6, 7	Channel 4
+8, 9	Channel 5
+10, 11	Channel 6
+12, 13	Channel 7
+14, 15	Channel 8

Depending on its configured Channel Value Format, each enabled channel reports a 32-bit floating-point or 16-bit integer value to the CPU.

In the 16-bit integer mode, the low word of the 32-bit channel data area contains the 16-bit integer channel value. The high word (upper 16 bits) of the 32-bit value is set with the sign extension of the 16-bit integer. This sign-extended upper word allows the 16-bit integer to be read as a 32-bit integer type in logic without losing the sign of the integer. If the 16-bit integer result is negative, the upper word in the 32-bit channel data has the value 0xFFFF. If the 16-bit integer result is positive, the upper word is 0x0000.

Channel Diagnostic Data: ALG508

In addition to the input data from field devices, Module can be configured to report channel diagnostics status data to the CPU. The CPU stores this data at the *Diagnostic Reference Address* configured for this module. The use of this feature is optional.

The diagnostics data for each channel occupies two words (whether the channel is used or not):

Diagnostic Reference Address	Contains this Input
+0, 1	Channel 1
+2, 3	Channel 2
+4, 5	Channel 3
+6, 7	Channel 4
+8, 9	Channel 5
+10, 11	Channel 6
+12, 13	Channel 7
+14, 15	Channel 8

When a diagnostic bit equals 1, the alarm or fault condition is present on the channel. When a bit equals 0 the alarm or fault condition is either not present or detection is not enabled in the configuration for that channel.

For each channel, the format of this data is:

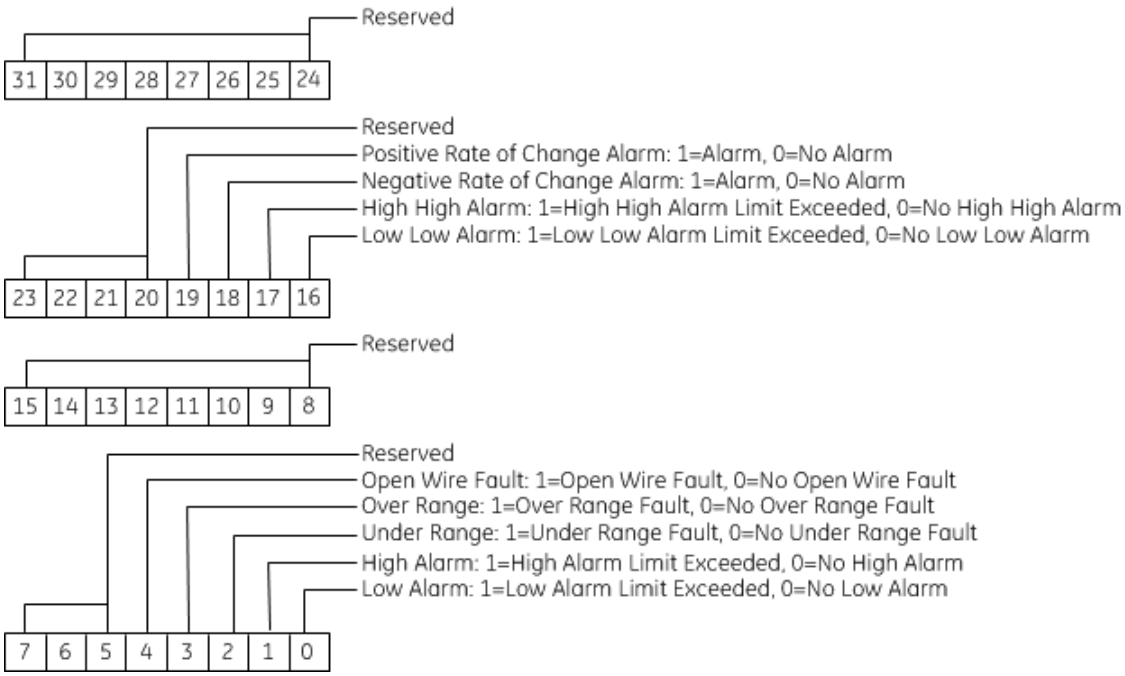

Module Status Data: ALG508

Module can also optionally be configured to return two bits of module status data to the CPU. The CPU stores this data in the 32-bit *Module Status Data* reference area configured for this module.

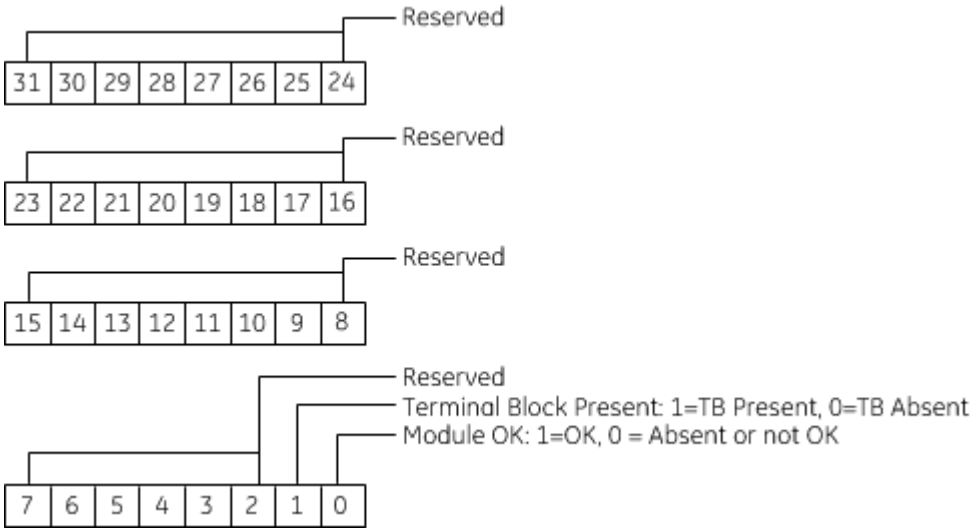

Terminal Block Detection ALG508

Module automatically checks for the presence of a Terminal Block.

The TB LED indicates the state of the terminal block of this module. It is green when the Terminal Block is present or red if it is not.

Faults are automatically logged in the CPU I/O Fault table when the terminal block is inserted or removed from a configured module in the system. The fault type is Field Fault and the fault description indicates whether the fault is a "Loss of terminal block" or an "Addition of terminal block". If a Terminal Block is not present while a configuration is being stored, a "Loss of terminal block" fault is logged.

Bit 1 of Module Status Reference indicates the status of the terminal block. To enable Module Status reporting, Module Status Reference must be configured. During operation, the PLC must be in an I/O Enabled mode for the current module Status to be scanned and updated in reference memory.

Section 16: Special Purpose Modules

This chapter describes special-purpose modules for PACSystems RX3i controllers:

Module Description	Catalog Number	Section
RX3i I/O Link Interface Module	IC694BEM320	16.1
RX3i I/O Link Master Module	IC694BEM321	16.2
RX3i Genius Bus Controller Module	IC694BEM331	16.4
RX3i Serial Communications Module, 2 Ports	IC695CMM002	16.5
RX3i Serial Communications Module, 4 Ports	IC695CMM004	16.5
RX3i Control Memory Xchange Module	IC695CMX128	16.7
RX3i Redundancy Memory Xchange Module, Multi-mode fiber	IC695RMX128	16.8
RX3i Redundancy Memory Xchange Module, Single-mode fiber	IC695RMX228	16.8
RX3i DeviceNet Master Module	IC694DNM200	16.9
RX3i Motion Mate Module	IC694DSM314	16.10
RX3i Motion Controller Module	IC694DSM324	16.11
RX3i PACMotion Multi-Axis Motion Controller	IC695PMM335	16.12
RX3i IEC 61850 Ethernet Communication Module	IC695ECM850	16.13
RX3i Ethernet Transmitter Module	IC695ETM001	16.15
RX3i DNP3 Outstation Module	IC695EDS001	16.16
RX3i Ethernet 104 Server Module	IC695EIS001	16.18
RX3i Ethernet Network Interface Unit	IC695NIU001	0
RX3i Ethernet Network Interface Unit	IC695NIU001 *PLUS*	16.21
RX3i PROFIBUS Master Module	IC695PBM300	16.22
RX3i PROFIBUS Slave Module	IC695PBS301	0
RX3i PROFINET Controller Module	IC695PNC001	16.24
RX3i PROFINET Scanner Module	IC695PNS001 IC695PNS101	16.25
RX3i CEP Carrier	IC695CEP001	16.26
RX3i CEP Expansion Carrier	IC694CEE001	16.26
RX3i Genius Communications Gateway	IC695GCG001	16.27
RX3i Pressure Transducer Module	IC695PRS015	16.28

16.1 RX3i I/O Link Interface Module: IC694BEM320

Figure 374: IC694BEM320

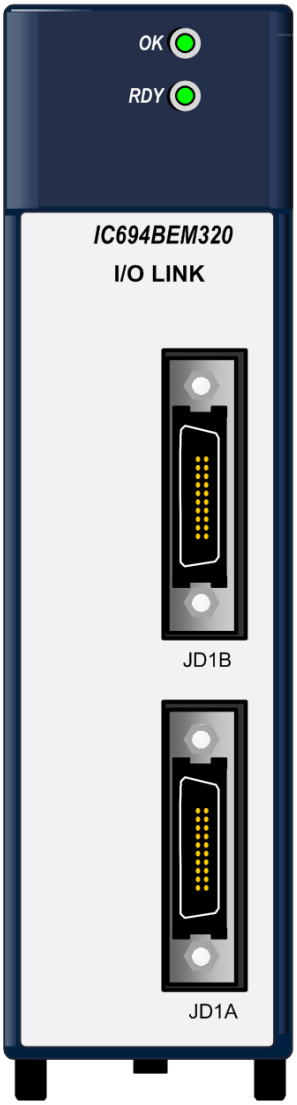

The ***RX3i I/O Link Interface*** Module, IC694BEM320, operates as a slave on an I/O Link network. It can exchange either 32 or 64 inputs and outputs with the master. Typical masters on the I/O Link include all modern CNCs and Power Mates, PACSystems controllers, and Series 90 PLCs equipped with an I/O Link Master Module.

An I/O Link Interface Module occupies one module slot in an RX3i backplane. It can be installed in any available backplane slot.

Module does not support insertion into or removal from an RX3i Universal Backplane which is under power (see *Hot Insertion and Removal Not Supported*).

The maximum number of I/O Link Interface Modules that can be installed in the backplane depends on the power that is available from the power supply. To determine the exact number of modules allowed in your system, refer to the information on power supplies in Chapter 3.

Usually, when there are multiple I/O Link Interface Modules in the same RX3i system, they are on separate I/O Links. However, it is possible to have more than one I/O Link Interface Module in the system connected to the same link, if that suits the needs of the application.

16.1.1 Specifications

Specification	Description
Module type	RX3i I/O Link Interface Module, providing I/O Link communications with I/O Link Master.
LEDs	OK, RDY
I/O Points	32 or 64, jumper selectable
+5 V current	without Optical Adapter connected: 205 mA with Optical Adapter: 405 mA
User Manual	RX3i I/O Link Interface Modules User's Manual, GFK-2358

16.1.2 I/O Size Selection: BEM320

The front cover of Module is removable (Figure 375).

Figure 375: Removable Cover BEM320

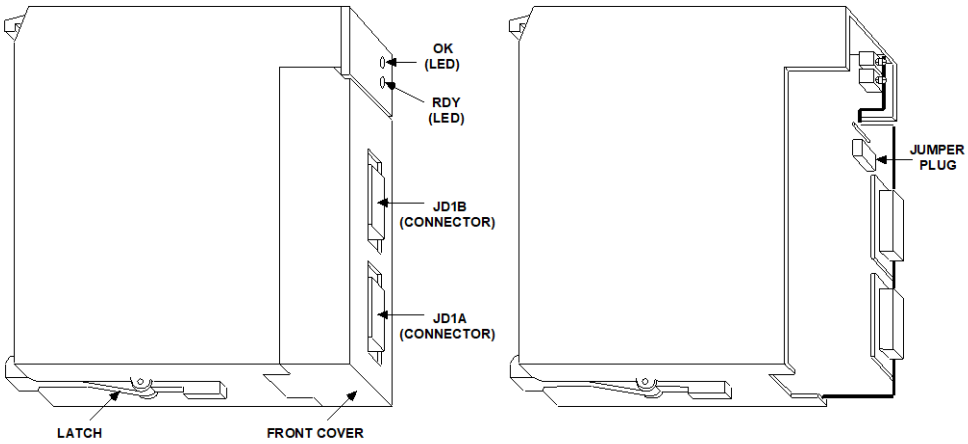

Figure 376: Module Size Selection (JP1) BEM320

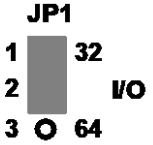

A jumper plug (Figure 376) inside the front cover is used to set Module up as a 32-point or 64-point I/O module. The factory-shipped default is 32.

- To select 32 inputs and 32 outputs, apply the jumper to pins 1 &2.
- To select 64 inputs and 64 outputs, apply the jumper to pins 2 & 3.

16.1.3 LEDs: BEM320

Module has two LEDs that show its operating, and communications status.

OK: Indicates the operating status of Module.
RDY: Indicates the communications status of Module.

After power-up, the OK LED should remain ON. The RDY LED turns ON after the I/O Link master has established communications with Module.

16.1.4 Serial Ports: BEM320

The front of Module has two 20–pin connectors that are used to attach the I/O Link cable. One connector is for the cable to the previous device on the link––either the master or another slave. The other connector is for the cable to the next slave on the

link, if there is one. Refer to the *RX3i I/O Link Modules User's Manual*, GFK-2358 for more information. Signal levels are RS422/485 compatible.

16.3 RX3i I/O Link Master Module: IC694BEM321

Figure 377: IC694BEM321

The ***RX3i I/O Link Master*** module, IC694BEM321, allows a PACSystems RX3i controller to act as a master on a proprietary I/O Link. The master can receive 1024 discrete inputs from slaves, and send up to 1024 discrete outputs. Typical items running under the control of an I/O Link Master can include clusters of I/O (such as I/O Model A and Connector Panel I/O), PACSystems, and Series 90 PLCs with I/O Link Interface (slave) modules, and Operator Panels that are I/O Link-compatible.

An I/O Link Master Module can be installed in any available slot in any RX3i backplane. For best performance, it should be installed in the Main Backplane or in an Expansion Backplane. The maximum number of I/O Link Master Modules that can be installed in the backplane depends on the power that is available from the power supply. To determine the exact number of modules allowed in your system, refer to the information on power supplies in Chapter 3.

Module does not support insertion into or removal from an RX3i Universal Backplane which is under power (see *Hot Insertion and Removal Not Supported).*

If there are multiple I/O Link Master modules in the same RX3i system, they must be on separate I/O Links.

16.3.1 Specifications: BEM321

BEM321	Specifications
Module type	PACSystems RX3i controller module, providing I/O Link communications with up to 16 I/O Link slaves.
I/O Points	Up to 1024 inputs and 1024 outputs
+5 Vdc current required	without Optical Adapter connected: 415 mA with Optical Adapter: 615 mA
Host CPUs	▪ PACSystems RX3i CPUs ▪ Series 90-30 CPUs (models 311, 313, 321, 323, 331, and 341): release 4.4 or later, and all versions of the CPU models 350, 351, 352, 360, 363, and 364 ▪ Series 90-30 Hand-held Programmer (HHP)
User Manual	RX3i I/O Link Interface Modules User's Manual, GFK-2358

16.3.2 LEDs: BEM321

Module has three LEDs that show its operating and communications status.

OK	CFG	ACTV	Meaning
off	off	off	No power to Module, or power-up in progress
on	off	off	Module powered up but not configured
on	on	off	Module powered up and configured with minimum configuration (input status reference assigned and output status reference assigned), but the link is not yet active, or has been activated but has gone down
on	on	on	Normal operation with the active link

After power-up, the OK LED should stay ON. The CFG LED goes on after the CPU supplies Module configuration. The ACTV LED goes on when link communications have been established.

16.3.3 Restart Pushbutton: BEM321

The LINK RESTART pushbutton can be used to restart the operation of the link if a failure occurs.

Note: Pushing the LINK RESTART button while the link is operating has no effect. If the link stops operating, all slaves must be power–cycled before using the LINK RESTART pushbutton to restart operation of the link.

Figure 378: Fuse location BEM321

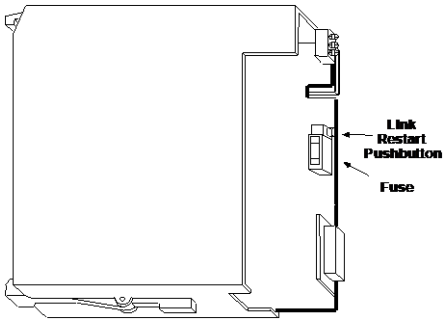

Fuse

The front cover of Module is removable. A fuse located directly below the Restart pushbutton protects the +5 Vdc signal pins used by Optical Adapter cable. It is a replaceable 0.5 A fast–blow fuse (5 mm diameter x 20 mm length).

16.3.4 Serial Port: BEM321

The front of Module has one 20–pin, Honda–type connector, used for connection to the first slave on the I/O Link. Signal levels are RS422/485 compatible.

16.4 RX3i Genius Bus Controller: IC694BEM331

The ***RX3i Genius Bus Controller***, IC694BEM331, interfaces a PACSystems RX3i and a Genius I/O serial bus. In addition to the Bus Controller, the bus can serve: Genius blocks, other PLCs with Genius Bus Controllers, Remote Drops, VersaMax and Field Control I/O Stations, Genius Hand-Held Monitor (HHM), Multiple hosts.

Figure 379: IC694BEM331

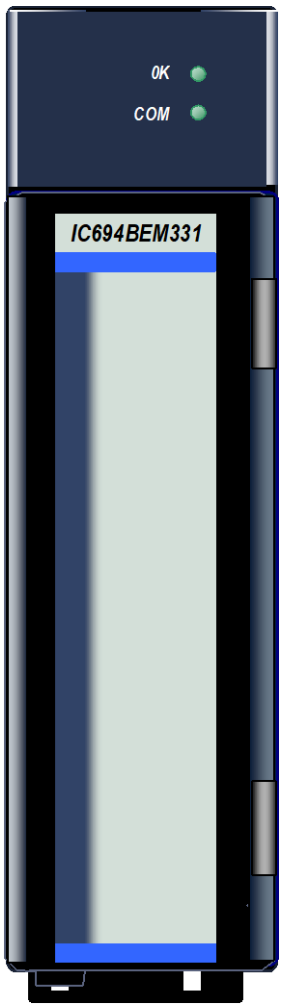

16.4.1 Features

- The Bus Controller can exchange up to 128 bytes with each device on the Genius I/O bus.
- Genius blocks and other devices on the bus automatically report faults, alarms, and certain other predefined conditions to the Bus Controller. The Bus Controller stores any diagnostic messages it receives. They are read automatically by the CPU. Faults can then be displayed in the fault table using the programming software.
- The Bus Controller supports all Genius datagrams. Refer to Chapter 3 of the Genius I/O System and Communications User's Manual, GEK-90486-1, for details on using datagrams.
- The Bus Controller can send up to 128 bytes of Global Data each bus scan. Global Data is data that is automatically and repeatedly broadcast by a Genius Bus Controller.
- The Bus Controller can receive up to 128 bytes of Global Data each bus scan from every other Bus Controller on its bus.
- Up to eight Genius Bus Controllers can be included in an RX3i system.

16.4.2 LEDs: BEM331

The LEDs on the front of the Genius Bus Controller indicate its operating status. Both LEDs should be On during normal operation.

OK Shows the status of the Bus Controller. This LED turns on after power-up diagnostics are completed.

COM Shows the status of the Genius communications bus. This LED is on steadily when the bus is operating properly. It blinks for intermittent bus errors and is off for a failed bus. It is also off when no configuration has been received from the CPU.

16.4.3 Specifications: BEM331

BEM331	Specifications
Current Consumption	300 mA at 5 Vdc, maximum
Diagnostics	Advanced diagnostics capabilities
Communications	Global Data and Datagrams
Data Length	128 bytes per message
Data Rates	Configurable: 153.5 kbaud standard/extended, 76.8 kbaud, or 38.4 kbaud
Genius Bus Specifications	
Bus Type	Daisy-chained bus cable; single twisted-pair plus shield or Twinax. Fiber optical cable and modems can also be used.
Bus Termination	75, 100, 120, or 150 Ω resistor at both ends of the electrical bus cable.
Maximum Bus Length	7800 feet at 38.4 kbaud, 4500 feet at 76.8 kbaud, 3500 feet at 153.6 kbaud extended, 2000 feet at 153.6 Kbaud standard. Maximum length at each baud rate also depends on cable type, as listed in the *Genius System and Communications Manual GEK-90486-1*
Maximum Number of Devices	32 devices at all baud rates except 38.4kbaud. 16 devices at 38.4kbaud.
Isolation	2000 V Hi-Pot, 1500 V transient common-mode rejection.

For product standards and general specifications, refer to Appendix A:.

Compatibility

Specific equipment or software versions required for compatibility with the Bus Controller are listed below.

Equipment/Software	Compatibility
Series 90-30 PLC	If the RX3i Genius Bus Controller is installed in a Series 90-30 PLC, the CPU model can be IC693CPU311K, 321K, 331L or later, or any version of the IC693CPU313, 323, 340, 341, 350, 351, 352, 360, 363, and 364. The CPU firmware must be release 5.0 or later.
Series Six PLC	To exchange global data with an RX3i Genius Bus Controller, a Series Six Bus Controller must be catalog number IC660CBB902F/903F (firmware version 1.5), or later.
Genius Hand-Held Monitor	There is no Hand-Held Monitor connector on Module, but a Hand-Held Monitor can communicate with the Bus Controller while connected to any other device on the bus. HHM version IC660HHM501H (revision 4.5) or later is required.
Genius Bus	The Genius bus is a shielded twisted-pair wire, daisy-chained between devices, and terminated at both ends. Proper cable selection is critical to the successful operation of the system. Suitable cable types are listed in GEK-90486-1, the *Genius I/O System, and Communications User's Manual* GEK-90486-1.

Genius System Documentation

Refer to the following manuals for detailed information on the Genius I/O system:

- GEK-90486-1, Genius I/O System and Communications User's Manual
- GEK-90486-2, Genius I/O Discrete, and Analog Blocks User's Manual

16.4.4 Field Wiring: BEM331

Figure 380: Terminal Assignments BEM331

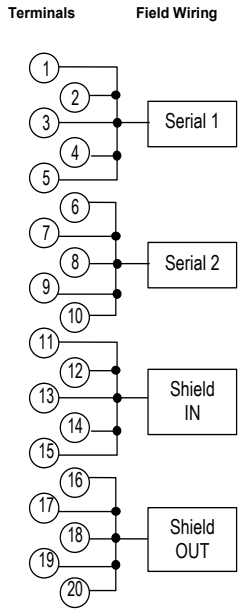

Using the cable type selected for the application, connect the devices as displayed in Figure 381. Each terminal accepts up to one AWG #14 (2.10 mm^2 wire or two AWG #16 (1.32 mm^2 wires using ring or lug-type connectors.

Figure 381: Interconnection of Devices on Genius Bus

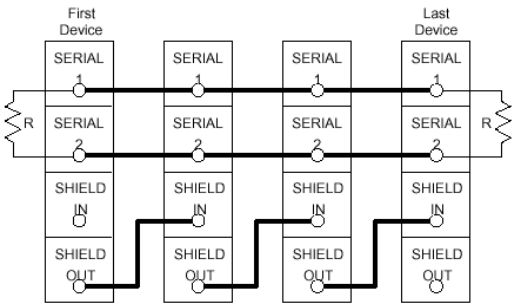

The bus shield wires are not insulated; do not permit them to touch other wires or terminals. Spaghetti tubing should be used to cover these wires.

1. Connect the Serial 1 terminals of adjacent devices and the Serial 2 terminals of adjacent devices.

2. Connect Shield In to the Shield Out terminal of the previous device. (For the first device on the bus, Shield In is not connected.)

3. Connect Shield Out to the Shield In terminal of the next device. (For the last device on the bus, Shield Out is not connected.)

The Serial 1 and Serial 2 terminals are interconnected *on the circuit boar*d, not on the terminal strip. Incoming and outgoing signal wire pairs can be connected to either one or two Serial 1 or Serial 2 terminals:

Figure 382: Wiring Genius Bus Signals for Continuous Signal Path

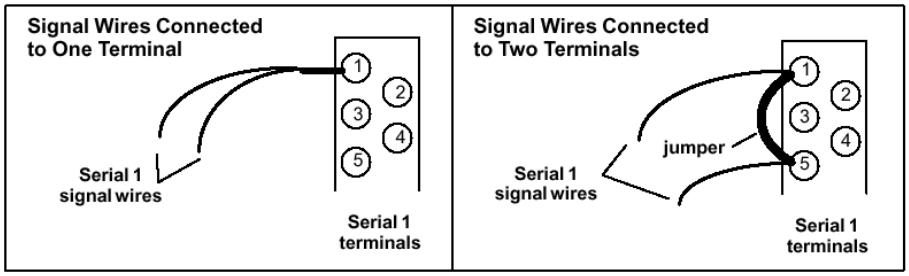

When connecting two signal wires to the same terminal, use a spade or lug-type connectors, or twist the exposed ends of the wires together before inserting them. This will allow future removal of the Terminal Assembly without disrupting other devices on the bus.

When connecting two signal wires to separate terminals, install a jumper between the two terminals as shown on the right in Figure 382 above. Failure to install the jumper will cause the entire bus to be disrupted whenever the faceplate is removed.

Terminating the Bus

The bus must be terminated at both ends by its characteristic impedance. The list of suitable cable types in *the Genius I/O System and Communications User's Manual GEK-90486-1* includes the termination requirements for each cable type. If the Bus Controller is at the end of the bus, install a resistor of the appropriate impedance across its Serial 1 and Serial 2 terminals as displayed in Figure 383.

If you need to install the terminating resistor across terminals different than those used for the signal wires, attach jumper wires between the signal wire terminals and the resistor terminals to prevent the bus from becoming unterminated if the Terminal Assembly is removed. Failure to do so will cause the entire bus to be disrupted whenever the faceplate is removed.

Figure 383: Installing Genius Bus Terminating Resistor

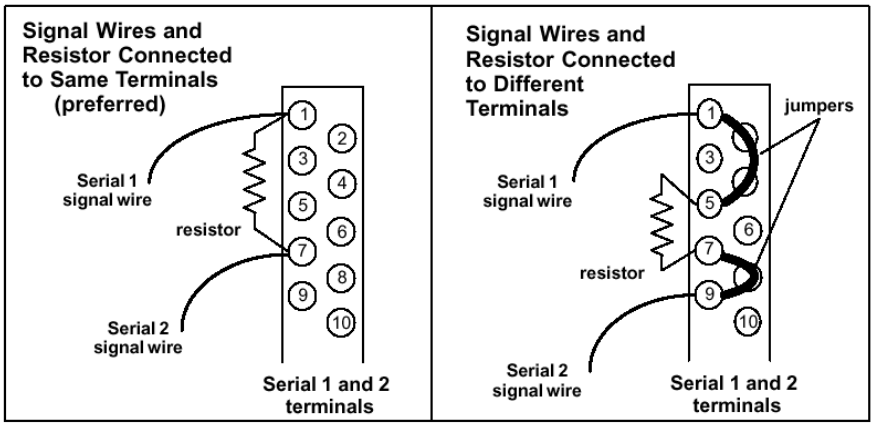

Hot-Swapping IC693BEM331/IC694BEM331 Modules

Genius Bus Controller modules IC693BEM331/IC694BEM331 that are included in a Max-ON redundancy system should not be installed or removed from the PLC that is operating as a Master. If a module is removed from the Master and then re-installed, the outputs for that module will not be enabled until the next Backup-to-Master transition.

Any time a Genius Bus Controller is removed from an active system, there is a possibility that the bus may be disrupted with a subsequent impact on the corresponding I/O devices. For systems that require online maintainability, it is recommended that dual (redundant) Genius busses be used.

16.5 RX3i Serial Communications Modules: IC695CMM002, IC695CMM004

PACSystems RX3i Serial Communications modules expand the serial communications capabilities of the RX3i system.

Serial Communications module, IC695CMM002, provides two independent, isolated serial ports.

Serial Communications module, IC695CMM004 (Figure 384), provides four independent, isolated serial ports.

Up to six Serial Communications modules can be located in the main PACSystems RX3i backplane.

Up to four Serial Communications modules can be located in each remote rack that is managed by a PACSystems RX3i PROFINET Scanner. Up to one module can be located in each remote node that is managed by a PACSystems RX3i CEP Carrier.

Each port can be configured for MODBUS Master, MODBUS Slave, or Serial I/O protocol. If any port is configured for DNP3 Master or Slave, the other ports on Module can only be configured for DNP3 Master or Slave. When located in a remote rack that is managed by a PACSystems RX3i PROFINET Scanner or CEP Carrier, only MODBUS Master or MODBUS Slave protocol configurations are supported.

Figure 384: IC695CMM004

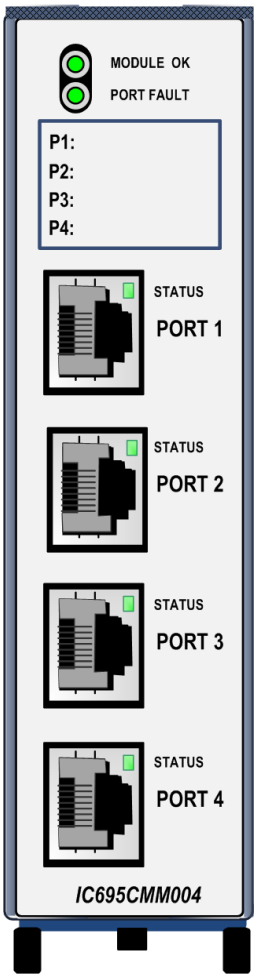

16.5.1 Features

- Port-to-port isolation and port-to-backplane isolation
- RS-232, RS-485/422 communication, software-selected
- Hardware handshake: RTS/CTS for RS-232
- Selectable Baud Rates: 1200, 2400, 4800, 9600, 19.2k, 38.4 k, 57.6 k, 115.2 k
- Module fault status reporting (Watchdog, Ram Fail, Flash Fail)
- Module identity and status reporting, including LED status indicators
- Meets CE, UL/CUL 508 and 1604, and ATEX requirements
- Flash memory for future upgrades

These modules must be located in an RX3i Universal Backplane.

These modules support insertion into and removal from an RX3i Universal Backplane which is under power. Refer to *Hot Insertion and Removal*.

16.6 LEDs: CMM002 & CMM004

Figure 385: Module LEDs & Ethernet Port LEDs: CMM004

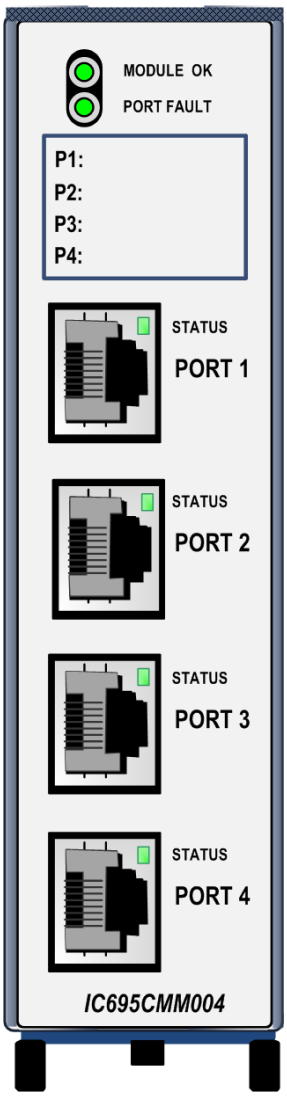

Module OK LED indicates the status of Module. Solid green indicates that Module has been configured. Module OK LED is off, if Module is not receiving power from the R3i backplane, or if a serious module fault exists.

At power-up, Module OK LED flashes green/off while Module is executing power-up diagnostics. It then flashes more slowly as Module receives its configuration from the CPU.

If a problem occurs, Module OK LED flashes amber. The blink code (below) indicates the cause of the error.

1 = watchdog expired
2 = RAM error
6 = Invalid CPU Master Interface version
7 = CPU heartbeat failure
8 = Failed to get the semaphore

The Port Fault LED indicates the status of all ports. The Port Fault LED is green when there are no faults present on any enabled port. If this LED turns amber, there is a fault on at least one port.

The Port Status LED flashes green when there is activity on the corresponding port.

The area below Module LEDs can be used to record identifying information about each port.

Note: If retentive memory is used for Port Control Data, when a power cycle with battery or hot swap of the CMM module occurs, all exchanges whose control bit is in the ON state will be re-executed on the next PLC output scan or output DO I/O. To prevent this, all exchange control bits must be cleared by the application logic on the initial PLC logic scan or upon detection of CMM module removal.

Module supports firmware upgrades using the WinLoader software utility (if the host CPU has a serial port) or using a Web-based tool (if the host CPU has no serial port). Instructions are included with the firmware upgrade kit.[25]

Operating information for these modules is provided in the *RX3i Serial Communications Modules Manual*, GFK-2460.

16.6.1 Specifications: CMM002 and CMM004

CMM002/CMM004	Specifications	
Number of Serial Ports	IC695CMM002: two independent serial ports IC695CMM004: four independent serial ports	
Connectors	RJ-45	
Number of Serial Communications Modules per CPU	Six in the main CPU backplane	
Backplane power requirements	IC695CMM002-DF or earlier	0.7 A maximum at 3.3 Vdc 0.115 A maximum at 5.0 Vdc
	IC695CMM004-DF or earlier	0.7 A maximum at 3.3 Vdc 0.150 A maximum at 5.0 Vdc
	IC695CMM002-EG or later	0.270 A maximum at 3.3 Vdc 0.115 A maximum at 5.0 Vdc
	IC695CMM004-EG or later	0.270 A maximum at 3.3 Vdc 0.190 A maximum at 5.0 Vdc
LEDs	Module OK, Port Fault, Port Status (2 or 4)	
Port Type	RS-232 or RS-485/22. 4-wire (full duplex) or 2-wire (half-duplex) operation for RS-485/422	
Flow Control for R-232	Selectable: Hardware (CTS/RTS) or none	
Baud rates	1200, 2400, 4800, 9600, 19.2 k, 38.4 k, 57.6 k, 115.2 k	
Parity	Even, odd, none	
Data bits	7, 8	
Stop bits	1, 2	
Operating Temperature	0°C to + 60°C	
Input Impedance	Zin > 96 kΩ for RS-485/422 3 kΩ < Zin < 7 kΩ for RS-232	
Max Overvoltage	±25 V	
Channel-Channel Crosstalk	−55 dB minimum	
Isolation	Port to Backplane and to frame ground: 250 Vac continuous 1500 Vac for 1 minute, 2550 Vdc for one second. Port to port: 500 Vdc continuous, 710 Vdc for one minute.	

To meet emission and immunity requirements for the EMC directive (CE mark), shielded cable must be used with this module.

16.6.2 Serial Ports: CMM002 & CMM004

Each port is a standard RJ-45 female connector with the following pin assignments. For MODBUS applications, note that these pin assignments are different than the standard MODBUS pin assignments. If the port is configured for MODBUS master or slave operation, custom cables are needed.

Figure 386: RJ-45 Jack & Pinouts

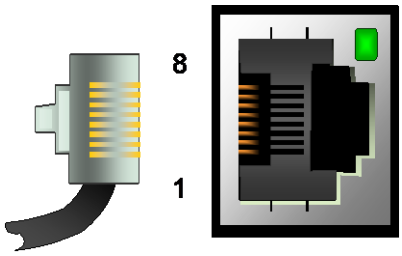

RJ-45 Pin	RS-232	RS-485/422 Half Duplex	RS-485/422 Full Duplex
8	COM	GND	GND
7			Termination 2
6	CTS		R- (RxD0)
5	COM	GND	GND
4		Termination 1	
3	RxD		R+ (RxD1)
2	TxD	T- / R- (D0)	T- (TxD0
1	RTS	T+ / R+ (D1)	T+ (TxD1)

Note: There is no shield or frame ground pin on the port connector.

If the Serial Communications module is communicating with a Series 90-30 CPU363 or external PACSystems RX3i CPU serial port, the connections are:

RX3i Serial Module		CPU363/RX3i CPU with Serial Port
T+	To	RD('B')
T-	To	RD('A')
R+	To	SD('B')
R-	To	SD('A')

Termination

By default, each port is set for no termination. Termination is needed if Module is the first or last device on an RS-485 network, even if there is only one other device on the network. Termination can be provided using either an external resistor as displayed in the following figure or the 120 Ω termination resistor built into the port. If line termination other than 120 Ω is required, an appropriate external resistor must be supplied.

User-Supplied Termination for RS-485

Figure 387: Termination RS-485 4-Wire Full Duplex

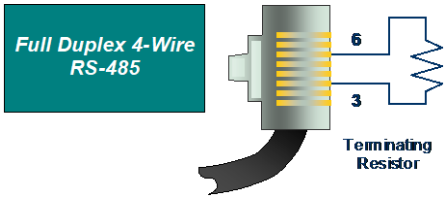

Figure 388: Termination RS-485 2-Wire Half Duplex

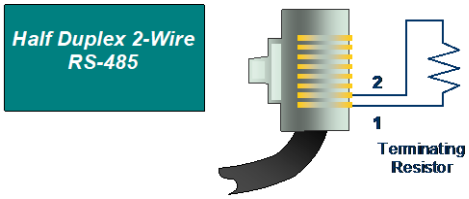

Built-in 120 Ω Termination for RS-485

By default, each port is set for no termination. There are two ways to use the built-in 120 Ω termination:

- Using the internal jumpers. To use this method, remove the faceplate of Module by pressing in on the side tabs and pulling the faceplate away from Module. With Module oriented as shown, move *either* the upper or lower jumper:

Figure 389: Using Module Internal Jumpers & Built-in 120 Ω Resistor for Termination

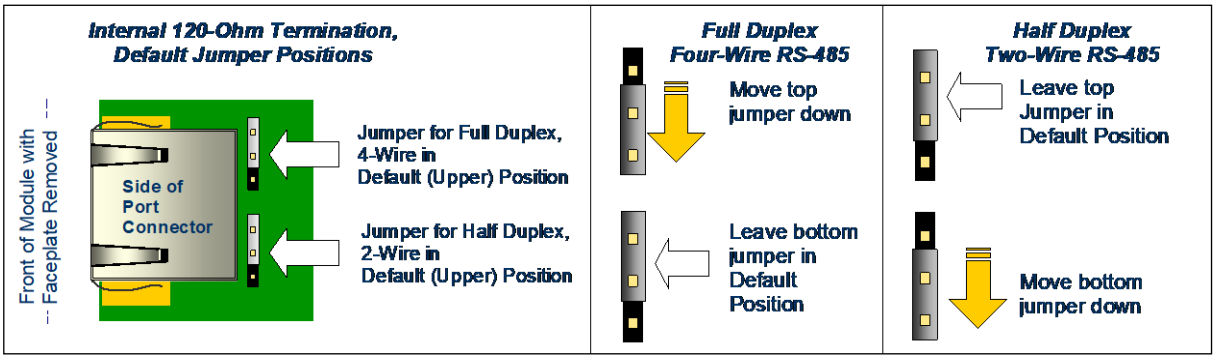

- Using an external jumper wire. To use this method, do NOT change the positions of the internal jumpers as shown in Figure 389 above. Instead, connect an external jumper wire across connector pins 3 and 7 for RS-485 4-wire, or across connector pins 1 and 4 for RS-485 2-wire.

Figure 390: Using External Jumper & Built-in 120 Ω Resistor for RS-485 4-Wire Full Duplex

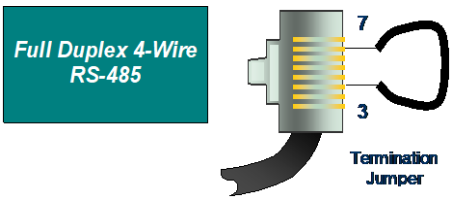

Figure 391: Using External Jumper & Built-in 120 Ω Resistor for RS-485 2-Wire Half Duplex

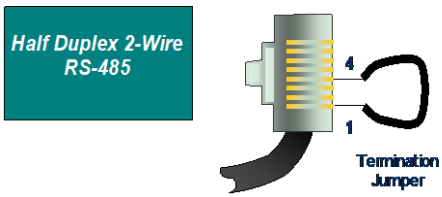

16.7 RX3i Control Memory Xchange Module: IC695CMX128

The ***RX3i Control Memory Xchange***, IC695CMX128, module provides deterministic sharing of data among PLCs and other computing devices on a high-speed fiber optic network, using reflective memory technology. A reflective memory network can contain up to 256 nodes. Each node in the network can be any reflective memory device that is compatible with the 5565 family[89]. When data is written to one node, all nodes on the network are automatically updated with the new data. Each node in the reflective memory network is connected in a daisy-chained loop using fiber optic cables. The transmitter of the first node is tied to the receiver of the second. The transmitter of the second node is tied to the receiver of the third node, and so on, until the loop is completed back at the receiver of the first node.
A PACSystems RX3i main rack supports a maximum of six CMX modules.

Figure 392: IC695CMX128

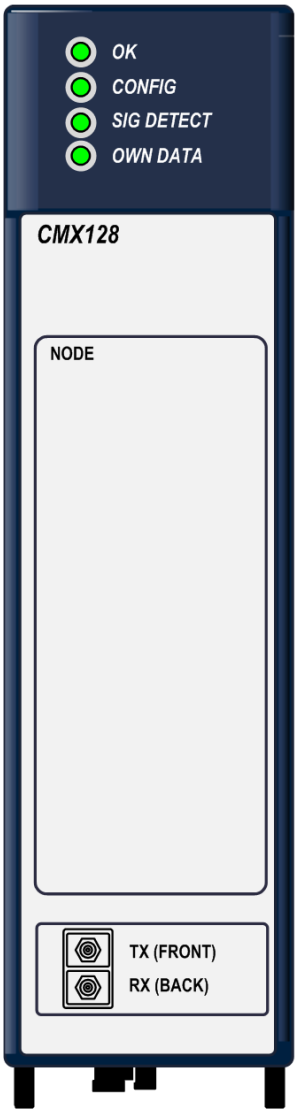

16.7.1 Features

- 128 Mbytes reflective memory with parity.
- No RX3i CPU processing required to operate the network.
- Network error detection.
- Connection with multimode fiber up to 300 m/984.25 ft
- Software configuration of all node parameters (no jumper or switch settings required).
- Dynamic packet sizes of 4 to 64 bytes, controlled by the CMX module
- Network transfer rate of 43 Mbyte/s (4 byte packets) to 174 Mbyte/s (64 byte packets)
- Network link speed of 2.1 Gigabits/sec.
- Programmable module interrupt output.
- Four general-purpose network interrupts with 32 bits of data each.
- Redundant transfer mode operation.
- Configurable network memory offset.

The CMX128 module must be located in an RX3i Universal Backplane.

Module supports insertion into and removal from an RX3i Universal Backplane which is under power. Refer to *Hot Insertion and Removal*.

[89] *These products are now marketed by Abaco Systems.*

Module supports firmware upgrades using the WinLoader software utility (if the host CPU has a serial port) or using a Web-based tool (if the host CPU has no serial port). Instructions are included with the firmware upgrade kit.[25]

CMX128 modules require a metal enclosure to meet radiated emissions requirements. For details, refer to Module datasheet, GFK-2506.

16.7.2 LEDs: CMX128

All front panel LED indicators are green.

LED	Description
OK	ON indicates the CMX module and the CPU are functioning properly.
CONFIG[90]	ON indicates Module is configured.
SIG DETECT	ON indicates the receiver is detecting a fiber optic signal.
OWN DATA	ON indicates Module has received its own data packet from the network at least once.

16.7.3 Specifications: CMX128

CMX128	Specification
Packet size	Dynamic packet sizes of 4 to 64 bytes, automatically controlled by the CMX128 module
Transfer rate	Network link speed of 2.1 Gbps
User memory	128MB SDRAM
Input power (from RX3i power supply)	660 mA at +3.3 Vdc 253 mA at +5 Vdc
Connectors	Fiber optic LC type, conforms to IEC 61754-20 Zirconium ceramic ferrule Insertion loss: 0.35 dB (maximum) Return loss: -30 dB

For product standards and general specifications, refer to Appendix A:.

[90] *A reflective memory hub can be used to bypass a node that is not configured.*

16.7.4 Optical Transceiver: CMX128

The optical transceiver, located on the bottom of Module, has two LC-type fiber optic ports. The port labeled “TX” is the transmitter and the port labeled “RX” is the receiver.

CMX modules are networked together using either simplex (single fiber) or duplex (dual fiber) multimode fiber optic cables. For details on cables, refer to the *PACSystems Memory Xchange Modules User’s Manual*, GFK-2300.

16.8 RX3i Redundancy Memory Xchange Modules: IC695RMX128, IC695RMX228

Both Redundancy Memory Xchange (RMX) modules operate as a node on a reflective memory network or as a dedicated link between CPUs in an RX3i Hot Standby CPU Redundancy system[91]. When the RMX is not being used as a link in a redundancy system, it is functionally identical to the IC695CMX128 module. Each node in the network can be any reflective memory device that is compatible with the 5565 family[89]. Whenever data is written to one node, all nodes on the network are automatically updated with the new data.

Note: A hub is required to connect a single mode fiber device into a ring with multi-mode fiber devices. Hubs are not permitted when connecting redundant pairs.

When used as a node on a reflective memory network, the RMX module provides deterministic sharing of data among PLCs and other computing devices on a high-speed fiber optic network. A reflective memory network can contain up to 256 nodes.

Figure 393: IC695RMX128

Figure 394: IC695RMX228

Each node in the reflective memory network is connected in a daisy-chained loop using fiber optic cables. The transmitter of the first node is tied to the receiver of the second. The transmitter of the second node is tied to the receiver of the third node, and so on, until the loop is completed at the receiver of the first node.

When used in a CPU redundancy system, the RMX modules provide a path for transferring data between the two redundancy CPUs in the redundant system. A complete communications path consists of one RMX in the primary unit, one RMX in the secondary unit, and two high-speed fiber optic cables connecting them to each other. This must be a two-node ring: no other reflective memory nodes are allowed to be part of this fiber optic network.

[91] *RMX modules are not compatible with rack-less RX3i CPU systems, such as CPE400/CPL410/CPS400. Instead, these CPUs use LAN3 to provide a high-speed link in support of Redundancy applications.*

Emerson ***strongly recommends*** two redundancy links (a total of four RMX modules) be configured and installed. Optionally, systems can be configured for a single redundancy link (a total of two RMX modules).

When the RMX is being used as link in a redundancy system, it cannot be used as a general-purpose Memory Xchange module. For details on the operation of a PACSystems CPU redundancy system, refer to the *PACSystems Hot Standby CPU Redundancy User's Manual,* GFK-2308.

A PACSystems RX3i main rack supports a maximum of six Memory Xchange modules in any combination of RMX128, RMX228 and CMX128 modules. A maximum of two RMX modules can be configured as redundancy communication links.

16.8.1 Features: RMX128 & RMX228

- PACSystems RX3i single slot form factor.
- 128 Mbytes reflective memory.[92]
- Software configuration of all node parameters (no jumper or switch settings required).[92]
- High-speed easy-to-use 2.12 GBaud fiber-optic network.
- No RX3i CPU processing required to operate the network.
- Network-compatible with VMIC 5565 family[89] of reflective memory devices

Note: A hub is required to connect a single-mode fiber device into a ring with multi-mode fiber devices. Hubs are not permitted when connecting redundant pairs.

- IC695RMX128: Connection with multi-mode fiber up to 300 m (984.25 ft).
- IC695RMX228: Connection with single-mode fiber up to 10 km (32,808 ft 4 in).
- Dynamic packet sizes of 4 to 64 bytes, controlled by the RMX module.
- Programmable module interrupt output.
- Four general-purpose network interrupts with 32 bits of data each.[92]
- Network error detection.
- Up to 256 nodes per network.[92]
- Redundant transfer mode operation. This optional mode reduces the chance of a data packet being dropped from the network.[92]
- Configurable network memory offset allows you to assign nodes on a network to groups according to the 16MB segment in the network address space that they use.[92]

[92] *Not available when operating as a redundancy link in a CPU redundancy system.*

The RMX128/RMX228 module must be located in an RX3i Universal Backplane. These modules support insertion into and removal from an RX3i Universal Backplane which is under power. Refer to *Hot Insertion and Removal*.

RMX128/RMX228 modules require a metal enclosure to meet radiated emissions requirements. For details, refer to Module datasheet, GFK-2511.

16.8.3 Specifications: RMX128 & RMX228

RMX128/RMX228	Specifications
Packet size	Dynamic, automatically controlled by RMX128/RMX228 module
User memory	128MB SDRAM
Input power (from RX3i power supply)	580 mA at +3.3 Vdc 220 mA at +5 Vdc
Connectors	Fiber optic LC type, conforms to IEC 61754-20 Zirconium ceramic ferrule Insertion loss: 0.35 dB (maximum) Return loss: Refer to cable/connector specifications.

For product standards and general specifications, refer to Appendix A:.

16.9 RX3i DeviceNet Master Module: IC694DNM200

The ***DeviceNet Master*** Module (IC964DNM200) allows the CPU to send and receive data over a DeviceNet network. It can act as master for up to 63 slaves on the DeviceNet network. It can also be configured to simultaneously function as a slave to another master on the bus.

Figure 395: IC694DNM200

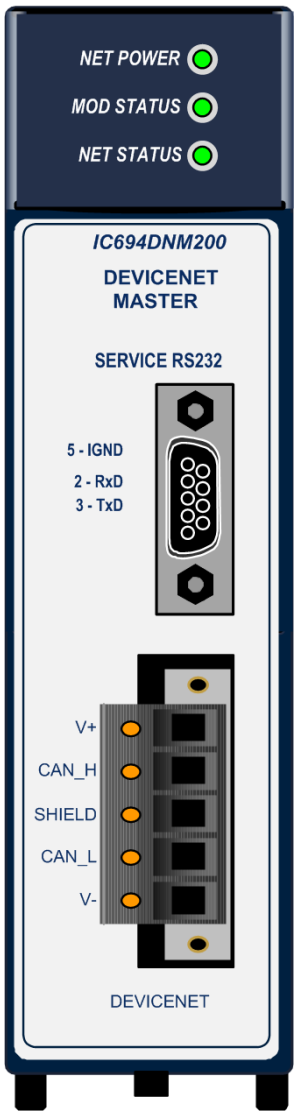

DeviceNet is a communications network that transmits data between control systems (for example: PLCs, PCs, VMEbus computers, and robot controllers) and distributed industrial devices such as switches, sensors, valve manifolds, motor starters, bar code readers, drives, displays, and operator interfaces.

This module can be installed in any available RX3i universal backplane I/O slot; it cannot be located in remote or expansion racks. Module does not support insertion into or removal from an RX3i Universal Backplane which is under power (see *Hot Insertion and Removal Not Supported).*

16.9.1 Features

- Bus communications at all standard DeviceNet data rates (125 k, 250 k, 500 k baud)
- Up to 255 bytes input data transfer and 255 bytes output data transfer per slave.
- Up to 3972 bytes of input data transfer and 3972 bytes of output data transfer per master.
- UCMM-capable Group 2 Server
- One or two I/O connections per Slave - Typically one connection is used for Polled and the other is used for Strobe, Cyclic, or COS
- Supports Unconnected Message Manager (UCMM) with one proxy connection per slave device
- Configurable global scan rate
- Supports Poll, Strobe, Cyclic and COS I/O connections, Fragmented I/O and Explicit Messaging
- Configurable update rates for Poll and COS/Cyclic on a connection basis.
- Configurable response to loss of communication
- Firmware upgrade via service port on module

16.9.2 LEDs and Connectors: DNM200

The three DeviceNet-compliant LEDs of Module show its operating and communications status. The RS-232 serial port is used for a computer connection during firmware upgrades. The DeviceNet connector is a removable spring-clamp terminal. It provides bus continuity and can be removed from Module without disrupting bus operation.

16.9.3 Specifications: DNM200

DNM200	Specifications
Backplane Current Consumption	450 mA at 5 Vdc (typical)
Thick Cable General Specifications	Two shielded pairs - Common axis with drain wire in center
	Overall braid shield - 65% coverage; 36 AWG or 0.12 mm tinned Cu braid minimum (individually tinned)
	Drain wire- #18 Copper min.; 19 strands minimum (individually tinned)
	Outside diameter - 0.410 inches (min) to 0.490 inches (max.) roundness - radius delta to be within 15% of 0.5 O.D.
Thin Cable General Specifications	Two shielded pairs - Common axis with drain wire in center
	Overall braid shield - 65% coverage; 36 AWG or 0.12 mm tinned Cu braid minimum (individually tinned)
	Drain wire - #22 Copper; 19 strands minimum (individually tinned)
	Outside diameter - 0.240 inches (min.) to 0.280 inches (max.) roundness - radius delta to be within 20% of 0.5 O.D.
Network Topology	Bus with limited branching (trunkline/dropline)
Redundancy	Not Supported
Network Power for Node devices	Nominal 24 Vdc ±4%
Allowed Nodes (Bridging excluded)	64 nodes
Data Packet Size	0-8 bytes with allowance for message fragmentation
Duplicate Address Detection	Addresses verified at power-up
Error Detection / Correction	CRC - retransmission of message if validity not acknowledged by recipient

For product standards and general specifications, refer to Appendix A:.

16.9.5 The DeviceNet Bus

Devices can be connected directly to the trunk cable, or to drop lines that are joined to the trunk cable with taps. Taps can be mounted in junction boxes or panels. Drop lines and daisy-chains are often used inside control panels where multiple devices are grouped together. When using drops with daisy-chains and branches, the maximum length from a tap to its farthest drop is 20 feet.

Figure 396: DeviceNet Bus Topology

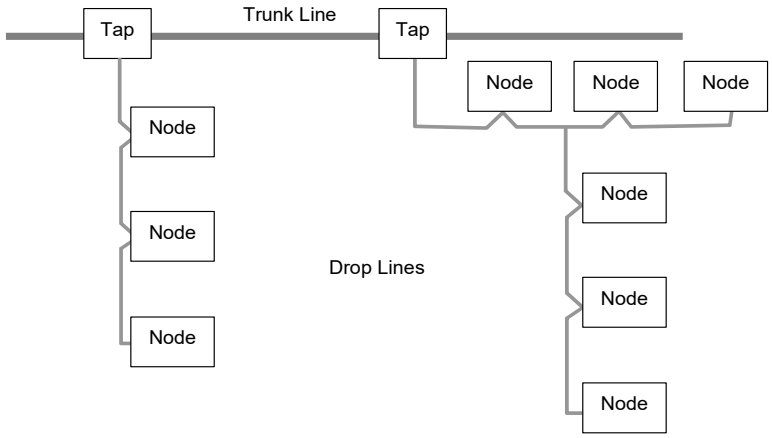

Bus Length

The maximum length of the trunk cable and drops both depend on the cable type and data rate. Individual drops may not exceed 6 meters and are limited to one network node per drop. However, the node may have multiple ports.

Data Rates	125 kbps	250 kbps	500 kbps
thick cable, trunk length	500 m (1640 ft)	250 m (820 ft)	100 m (328 ft)
thin cable, trunk length	100 m (328 ft)	100 m (328 ft)	100 m (328 ft)
maximum drop length	6 m (20 ft)	6 m (20 ft)	6 m (20 ft)
total length of all drops	156 m (512 ft)	78 m (256 ft)	39 m (128 ft)

For each baud rate, the total drop length is the sum of all the drop lines of both cable types in the network.

In addition, if the distance from a tap to the most distant device on its drop is longer than the distance from the tap to the nearest terminating resistor, the drop line length also counts as part of the trunk cable length (as well as the overall drop length).

DeviceNet Cable

Either DeviceNet thick cable or thin cable can be used. Thick cable permits greater cable lengths and higher current levels. Generally, thick cable is used for the trunk cable. Thin cable is normally used for shorter distances and is suitable for drop cables and for installations where more cable flexibility is needed. Both thick cable and thin cable are 5-wire, multi-conductor copper cable. Two wires form a transmission line for network communications. A second pair transmits network power. The fifth conductor forms an electromagnetic shield. Most cables have color coded leads which correspond to the color coding on the terminals on the DeviceNet Master Module.

Bus Connector Pin Assignments

The DeviceNet connector on the RX3i DeviceNet Master module has five color-coded screw-clamp terminals.

Figure 397: DeviceNet Connector Pinout

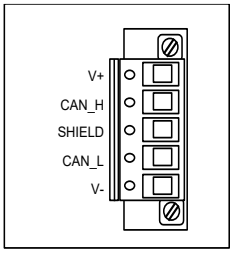

Signal	Pin	Wire Color
V+	5	Red
CAN_H	4	White
Shield	3	Bare
CAN_L	2	Blue
V-	1	Black

Wiring to the DeviceNet Master module depends on its location on the network:

121Ω 1% ¼ watt terminating resistors MUST be installed at both ends of the DeviceNet network. The terminating resistor is placed across the data communication signals at pin 2 (CAN_L) and pin 4 (CAN_H).
If the DeviceNet module is located at either end of the bus trunk, it is wired with one cable connection and a terminating resistor:

Figure 398: DeviceNet Terminating Resistor Installation

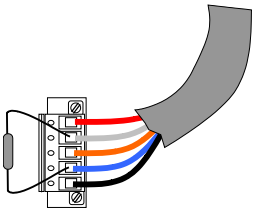

If Module is installed at the end of a drop or drop segment, it is wired with one cable connection only.

Figure 399: DeviceNet Wiring for End of Segment

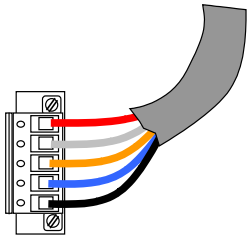

If Module is installed directly on the trunk cable or as part of a daisy-chained drop cable, it has both an incoming and outgoing cable connected:

Figure 400: DeviceNet Wiring for Daisy Chain

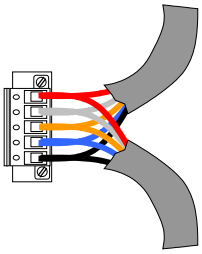

Grounding

All DeviceNet cable shields must be tied to ground at each device connection. This is done by tying the bare wire of the cable to pin 3 (Shield) of the connector.

Power Requirements

The DeviceNet Master module consumes 450 mA at 5 Vdc (typical) from the PLC backplane. This power is used for module operation, The DeviceNet Master powers its network transceiver from the 24 Vdc DeviceNet network power source. Linear power supplies are recommended for the DeviceNet power source. The DeviceNet power source should *not* also be used for device power. Transients caused by I/O devices can cause communications errors and even create bus-off conditions.

The DeviceNet specification recommends using a power tap to connect a power supply to the network. The power tap should be appropriately fused for the current capacity of the bus cables. The maximum current on the network depends on the cable type.

The DeviceNet network power supply must be grounded, but only at one point. The V- signal must be connected to protective earth ground at the power supply only. If multiple power supplies are used, only one power supply must have V- connected to earth ground.

Current Limit for Thick Cable

For thick cable, the maximum current on the network is 16 A. However, only 8 A is permitted on a single network segment; 16 A can be drawn from a single power supply by locating the power supply at the center point of two network segments, supplying 8 A to each segment.

Current Limit for Thin Cable

For thin cable, the maximum current permitted is 3 A.

16.10 Motion Mate Module: IC694DSM314

The ***Motion Mate Module*** (DSM314) is a multi-axis motion control module. It supports two control loop configurations:

- Standard Mode (Follower Control Loop Disabled)
- Follower Mode (Follower Control Loop Enabled)

The DSM314 Module can be used with α Series and β Series digital servo amplifiers and motors. It can also be used with analog SL Series analog servos and third-party analog velocity command interface and analog torque command interface servos. Module features include:

- Velocity Feed forward and Position Error Integrator
- High resolution of programming units
- Simple and powerful motion program instruction set
- Simple 1 to 4-axis motion programs
- Non-volatile storage for 10 programs and 40 subroutines
- Single-point-of-connect for programming and configuration.
- Firmware is stored in flash memory and is updated via COMM port.
- Recipe programming using command parameters.
- Electronic CAM capability
- Home and over-travel switch inputs for each Servo Axis
- Two Position Capture Strobe Inputs for each axis
- 5 Vdc, 24 Vdc, and analog I/O for use by PLC
- Incremental Quadrature Encoder input on each axis for Encoder/Analog mode
- 13-bit Analog Output can be controlled by PLC or used as Digital Servo Tuning monitor
- High-Speed digital output (four each 24 V and four each 5 V) via on-board Local Logic control

Figure 401: IC694DSM314

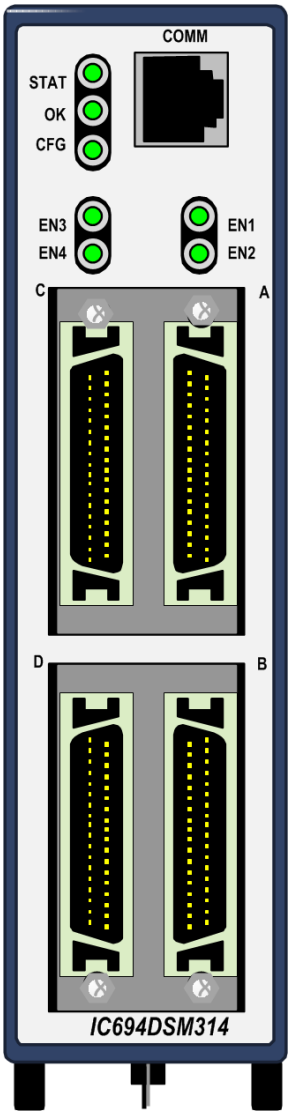

This module can be installed in any available I/O slot in any RX3i or Series 90-30 backplane. Module does not support insertion into or removal from an RX3i Universal Backplane which is under power (see *Hot Insertion and Removal Not Supported).*

16.10.1 Overview: DSM314

The DSM314 integrates high-performance motion control with the logic-solving functions of the RX3i Controller.

Figure 402: System Overview: DSM314

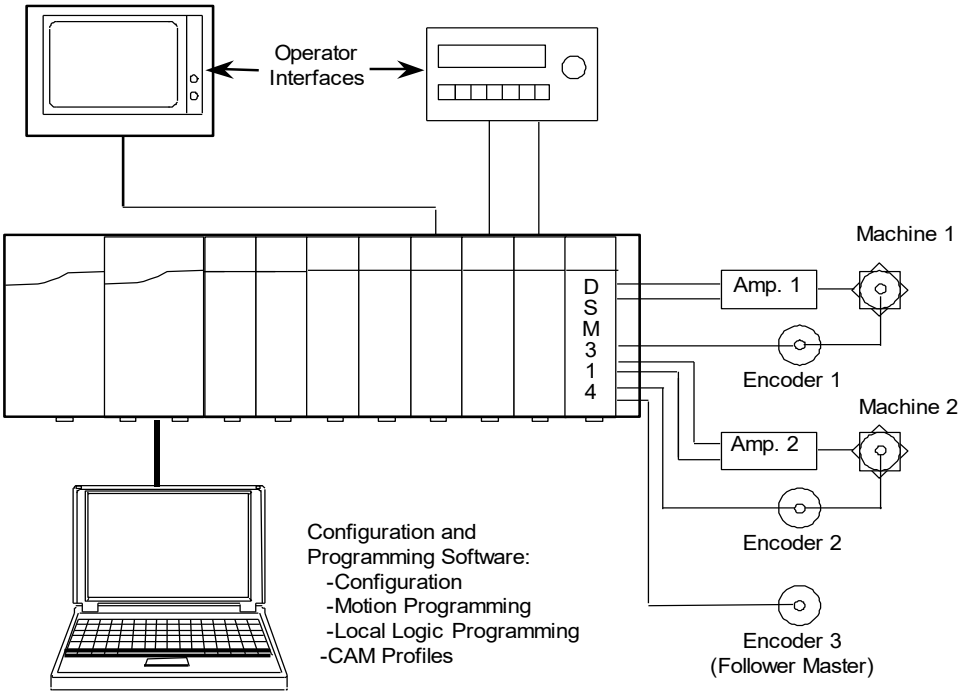

For more information about configuring and installing the DSM314 module, refer to the *Motion Mate User's Manual*, GFK-1742. For details about interfacing the DSM314 to the SL Servo products, refer to the manual, *SL Series Servo User's Manual*, GFK-1581.

16.10.2 Specifications: DSM314

DSM314	Specifications
Power Supply Voltage Power Supply Current Draw by DSM	5 Vdc from backplane 800 mA plus encoder supply current (refer to next item).
Available +5 Vdc Current/Module to supply external encoder, if used	500 mA (if used, must be added to module +5 Vdc current draw)
Number of DSM314 Modules in PACSystems RX3i Main Backplane	Up to 5 DSM314 modules in RX3i Main Backplane with Power Supply PWR040
Number of DSM314 Modules in PACSystems RX3i Expansion/Remote Backplane	3 DSM314 modules in expansion/remote backplane with PWR321 6 DSM314modules in remote backplane with PWR330/331 7 DSM314modules in expansion backplane with PWR330/331

16.10.3 Features: DSM314

LEDs

There are seven LED status indicators on the DSM314 module:

The **STAT** LED is normally On. When the LED is OFF, the DSM314 is not functioning. Slow blinking indicates status errors. Rapid blinking indicates errors that cause the servo to stop.

The **OK** LED indicates the current status of the DSM314 module. When the LED is steady On, Module is functioning properly. When the LED is Off, Module is not functioning.

The **CFG** LED is On when a module configuration has been received.

The **EN1** through **EN4** LEDs are On if the Axis 1 through Axis 4 Drive Enable relays are on.

Figure 403: DSM314 Features

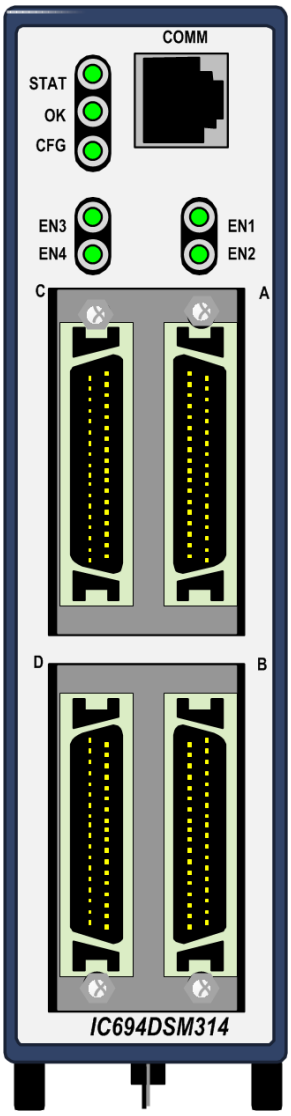

COMM Connector

The COMM port is an RJ-11 connector, used to download firmware updates to Module.

I/O Connectors

The DSM314 is a two-axis digital servo/one axis analog velocity interface or four-axis analog servo (Torque Mode and/or Velocity Mode) controller with four 36-pin I/O connectors labeled A, B, C, and D. All four connectors provide similar analog and digital I/O circuits.

Shield Ground Connection

The DSM314 must be connected to frame ground via the ground terminal on the bottom of Module.

16.11 Motion Controller Module: IC694DSM324

Figure 404: IC694DSM324

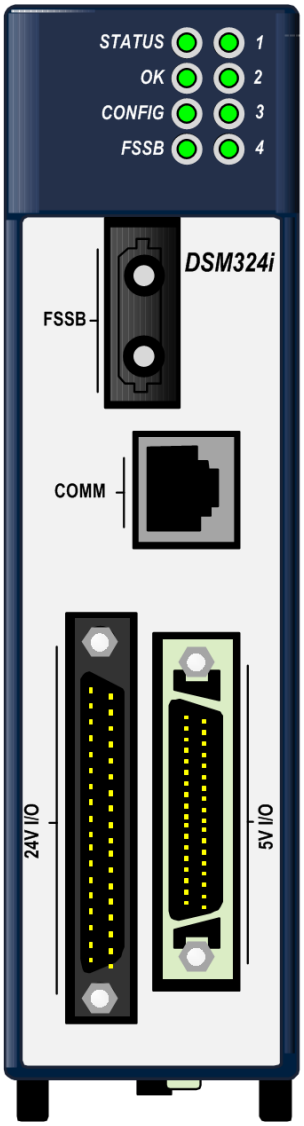

The ***Motion Controller*** Module, IC694DSM324, is a multi-axis motion control module. It supports two control loop configurations:

- Standard Mode (Follower Control Loop Disabled)
- Follower Mode (Follower Control Loop Enabled)

The DSM324 Module can be used with β*i* Series digital servo amplifiers and motors. Module features include:

- Block Processing time under 5ms
- Velocity Feed forward and Position Error Integrator
- High resolution of programming units
- Simple and powerful motion program instruction set
- Simple 1 to 4-axis motion programs
- Non-volatile storage for 10 programs and 40 subroutines
- Single-point-of-connect for programming and configuration.
- Firmware is stored in flash memory and is updated via COMM port.
- Recipe programming using command parameters.
- Electronic CAM capability
- Home and over-travel switch inputs for each Servo Axis
- Two Position Capture Strobe Inputs for each axis
- 5 Vdc, 24 Vdc, and analog I/O for use by PLC
- Incremental Quadrature Encoder input on each axis for Encoder/Analog mode
- 13-bit Analog Output can be controlled by PLC or used as Digital Servo Tuning monitor
- High-Speed digital output (four each 24 Vdc and four each 5 Vdc) via on-board Local Logic control

This module can be installed in any available I/O slot in any RX3i or Series 90-30 backplane. Module supports insertion into and removal from an RX3i Universal Backplane which is under power. Refer to *Hot Insertion and Removal*.

Refer to the *DSM324i Motion Controller for PACSystems RX3i and Series 90-30*, GFK-2347, for more information about the DSM324 module.

16.11.2 Overview: DSM324

The DSM324 integrates high-performance motion control with the logic-solving functions of the RX3i controller.

Figure 405: System Overview: DSM324

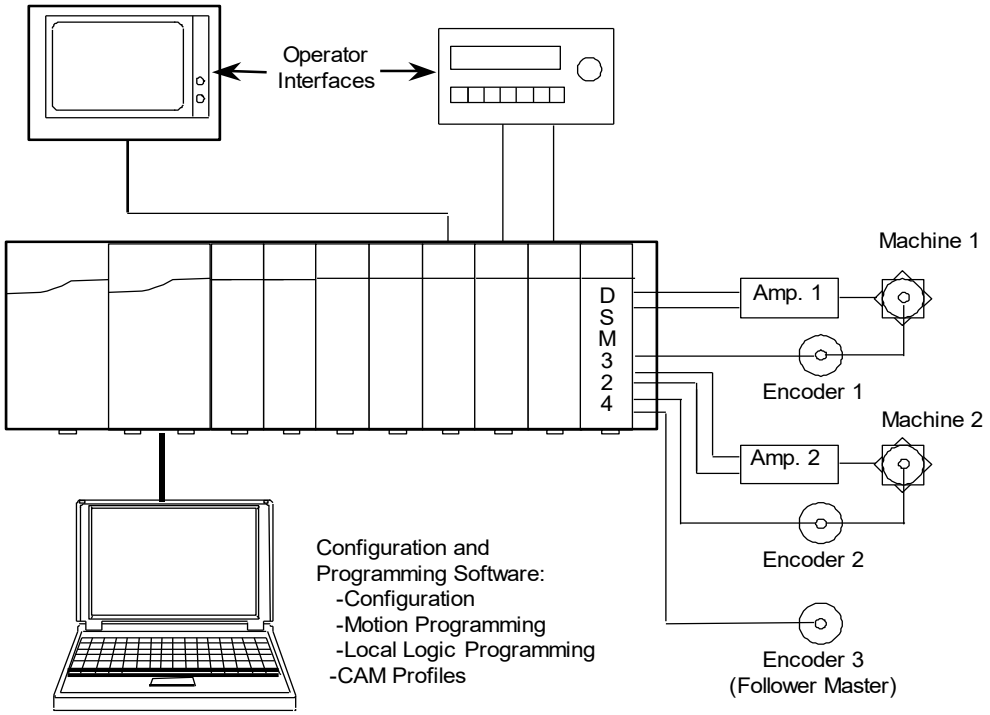

For more information about configuring and installing the DSM324 module, refer to the *DSM324i Motion Controller for PACSystems RX3i and Series 90-30*, GFK-2347. For details about interfacing the DSM324 to the SL Servo products, refer to the manual, *AC Servo Motor βis Descriptions Manual*, GFZ-65302EN.

16.11.3 Features: DSM324

Figure 406: DSM324 Features

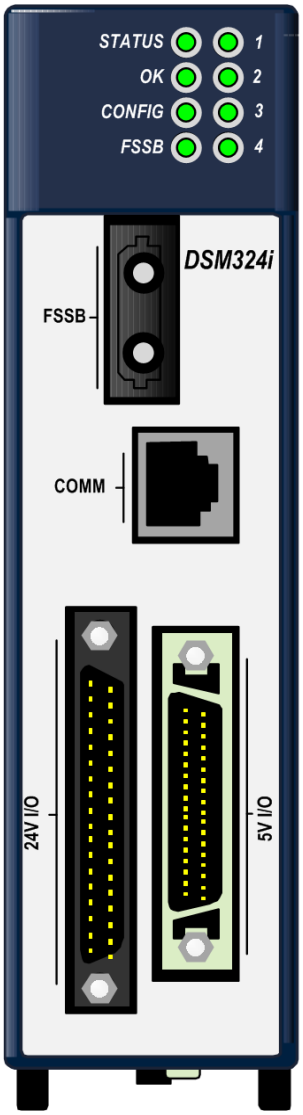

LEDs

There are eight LED status indicators on the DSM324 module:

The **STATUS** LED is normally On. When the LED is OFF, the DSM324 is not functioning as the result of a status error. Flashing signals an error condition.

The **OK** LED indicates the current status of the DSM314 module. When the LED is steady On, Module is functioning properly. When the LED is Off, Module is not functioning.

The **CONFIG** LED is On when a module configuration has been received.

The **FSSB** LED is On when FSSB communications are active. It blinks during FSSB setup. This LED is Off if FSSB communications are inactive or if FSSB setup has failed.

The Axis Enable LEDS, 1 through 4, are On if the Axis 1 through Axis 4 Drives are enabled.

FSSB Connector

The FSSB connector provides optical fiber connection to Servo Amplifiers for the exchange of command, feedback, and diagnostics data. This connector has a removable protective cap.

COMM Connector

The COMM port is an RJ-11 connector, used to download firmware updates to Module.

I/O Connectors

The DSM324 provides two connectors for 5 Vdc and 24 Vdc I/O. Pre-manufactured cables are available in 1-meter and 3-meter lengths for both I/O connectors.

Shield Ground Connection

The DSM324 must be connected to frame ground via the ground terminal on the bottom of Module. The grounding resistance of the system ground should be 100Ω or less (class 3 grounding).

16.11.4 Specifications: DSM324

DSM324	Specifications
Power Supply Voltage Power Supply Current Draw by DSM	5 Vdc from backplane 860 mA plus encoder supply current (refer to next item).
Available +5 V Current/Module to supply external encoder, if used	500 mA (if used, must be added to module +5 V current draw)
Number of DSM324i Modules in PACSystems RX3i Main Backplane	Up to 5 DSM324i modules in RX3i Main Backplane with Power Supply PWR040
Number of DSM324i Modules in PACSystems RX3i Expansion/Remote Backplane	2 DSM324i modules in expansion/remote backplane with PWR321 6 DSM324i modules in remote backplane with PWR330/331 6 DSM324i modules in expansion backplane with PWR330/331

16.12 PACMotion Multi-Axis Motion Controller: IC695PMM335

The ***PACMotion Multi-Axis Motion Controller***, IC695PMM335, is designed with the performance to deliver improved machine productivity required for today's high-speed machines and lean manufacturing environments.
Each module can control up to four servo axes. Up to 40 axes can be controlled from a single RX3i backplane.
The PMM335 supports discrete and synchronous motion control yielding a flexible motion controller that scales to fit your requirements.

Figure 407: IC695PMM335

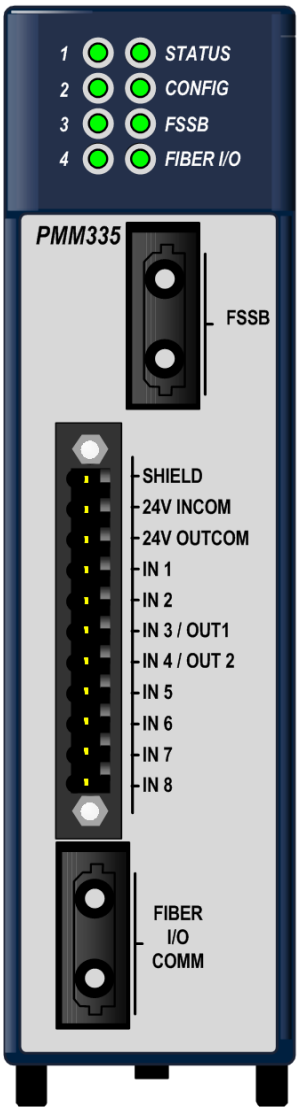

16.12.1 Servo Types Supported

- Digital: Supports FANUC βi, βHVi and αHVi Series digital servo amplifiers and motors. For a list of supported FANUC motors, refer to *Motor Type Codes* in *PACMotion Multi-Axis Motion Controller User's Manual,* GFK-2448.
- Analog: Provides analog velocity and analog torque command interfaces to third-party analog servos.

16.12.2 Features: PMM335

- Fast motion path (1 ms) planning and position update rates (500µs) deliver improved accuracy and faster response to changing control requirements.
- Consistent motion update rate regardless of the number of axes.
- High reliability FANUC servos improve machine uptime.
- High-Speed synchronization of up to 40 axes over the PACSystems RX3i backplane.
- Advanced CAM and gearing features for electronic line shaft applications.
- Single software development environment for complete automation control solution simplifies programming.
- Distributed architecture for greater machine flexibility – up to 100 meters between axes using noise immune fiber cables
- Optional Fiber Terminal Block allows distributed motion-centric I/O to reduce wiring complexity and cost.
- Two high-speed position capture inputs per axis for registration and sequence control.

This module is compatible with all rack-mounted RX3i CPUs except CRU320. It can be installed in any available RX3i I/O slot. Module supports insertion into and removal from an RX3i Universal Backplane which is under power. Refer to *Hot Insertion and Removal*.

16.12.3 Fiber I/O Terminal Block

The DIN-rail mounted FTB, IC695FTB001, allows the user to connect 5 V, 24 V, and analog I/O to motion specific devices, such as limit switches and encoders, over a full-duplex fiber optic link up to 100 m from the PMM335. FTB I/O can be configured as over-travel switch, home switch, quadrature encoder and high-speed touch probe position capture inputs, digital cam switch outputs or general purpose I/O. The FTB's analog outputs can be used as general-purpose analog outputs, or configured for closed position loop (velocity interface) or velocity loop (torque interface) control of up to two analog servos. A robust serial protocol encodes and decodes the data as it sent between the PMM and the FTB.
In the event of a system malfunction, such as loss of communication with the PMM, the FTB sets its I/O to the user-configured state.

Figure 408: PMM335 with DIN-Rail Mounted FTB001 Terminal Blocks

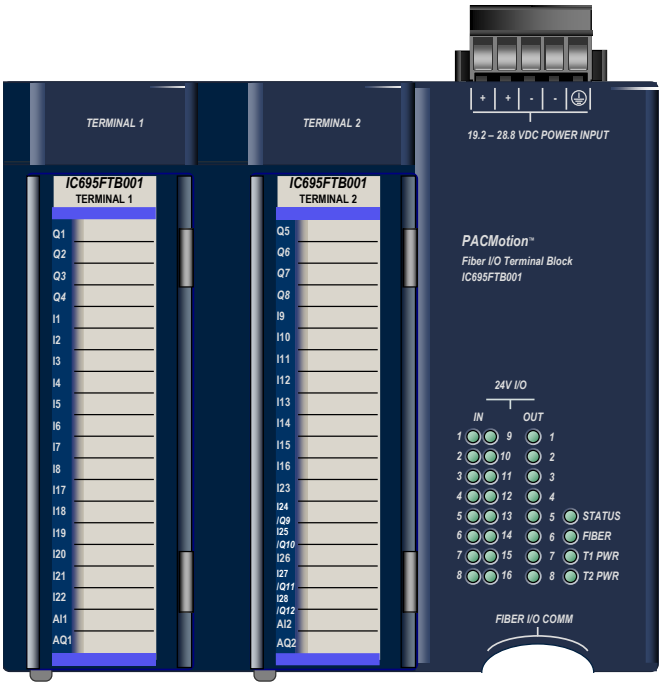

16.12.4 Features

- Fiber optic connection allows choice of cable lengths from 1 m to 100 m
- Fiber optic connection provides optical isolation between the main rack and the FTB.
- Current capability to 0.5 A on all 24 V outputs.
- Loss of encoder and open wire fault detection on 5 V differential inputs (quadrature encoder lines).
- Visual diagnostics provided via individual LEDs that indicate I/O point state.
- DIN-rail mounting allows convenient location of I/O.
- Fiber optic interface reduces remote I/O wiring cost and improves noise immunity.
- Removable RX3i terminal block headers provide ease of use
- A 5 Vdc power source for external quadrature encoders

16.14 IEC 61850 Ethernet Communication Module: IC695ECM850

The ***PACSystems RX3i IEC 61850 Ethernet Communication*** Module, IC695ECM850 (ECM850), connects an RX3i controller to an IEC 61850 network, enabling the controller to act as an IEC 61850 Client and communicate with Intelligent Electronic Devices (IEDs, IEC 61850 servers) on the network using the IEC 61850 protocol. (IEC 61850 is a standard for the design of electrical substation automation.) The ECM850 provides the functions and services required for an IEC 61850 Client, as described in the PICS and MICS in the appendices.

The ECM850 supports 10/100/1000 Mbps copper, 100/1000 Mbps multi-mode fiber, and 100/1000 Mbps single-mode fiber Ethernet connections. The network can include media interfaces of more than one type.

Features of the ECM850 include:

- Supports the following IEC 61850 client features
  - Multiple connections to IEDs
  - Read and write of data values
  - Control model – all models
  - Report by exception – reporting buffered and un-buffered
  - Browse data model – logical devices, nodes, data objects & attributes
  - Self-description – reads data model from IED over IEC 61850 network
- Full programming and configuration services for the IEC 61850 Client, including reading of device Substation Configuration Language (SCL) files and reading configuration data online directly from IEDs using the Machine Edition programming and configuration application.
- Supports operation in hot standby redundant systems.
- Built-in command-line interface function that supports direct monitoring and partial configuration by means of Module's Micro USB port or Telnet over Ethernet.
- Support for both star (switched) and linear (daisy-chained) network topologies.
- Four switched Ethernet ports (located on the underside) —
  - Two 8-conductor RJ-45 shielded twisted pair 10/100/1000 Mbps copper interfaces;
  - Two Small Form-factor Pluggable (SFP) cages for user-supplied SFP devices.
- Internal clock synchronized with the RX3i CPU for time-stamped diagnostics.
- Module supports insertion into and removal from an RX3i Universal Backplane which is under power. Refer to *Hot Insertion and Removal*.
- Module supports firmware upgrades using the WinLoader software utility (if the host CPU has a serial port) or using a Web-based tool (if the host CPU has no serial port). Instructions are included with the firmware upgrade kit.[25]

Figure 409: IC695ECM850

Note: The USB port is intended for system setup and diagnostics only. It must not remain permanently connected.

16.14.1 Specifications: ECM850

ECM850	Specifications
Protocol Support	IEC 61850 Client as per PICs and MICs specifications
Power Requirements	3.3 Vdc: 1.2 A with no SFP devices installed 1.9 A maximum (2 SFP devices installed, 0.35 A per SFP device)
	5 Vdc: 1.1 A maximum
Operating Temperature Range	0 to 60°C De-rated to 57°C: • if 100 MB Fiber SFPs installed, or • if Copper SFPs operating at 1 GB.
Number of Port Connectors	Two RJ-45 and Two SFP Cages (SFP devices not included, available separately.)
Micro USB Connector	One, for communication with a computer using Command Line Interface.
Local Area Network (LAN)	IEEE 802.2 Logical Link Control Class I IEEE 802.3 CSMA/CD Medium Access Control 10/100/1000 Mbps
CPU Status Bits	32
Polling Rate[93]	Configurable for every IED connection from 0 to 31267 ms (default is 1000 ms).
Number of IP Addresses	One
Number of MAC Addresses	Five. One per external port and one internal.
Network Topologies Supported	Star (switched), linear (daisy-chain)
Time Synchronization	SNTP Client – Multicast and Broadcast
System Maximum Limits	
ECM850s per RX3i CPU	Four (4). All must be located in main rack. (Use in remote or expansion racks not supported).
No of IED connections supported per ECM850	32
No of IED connections supported per RX3i CPU	128
Maximum I/O Memory per ECM850	32 Kbytes of combined Input/Output memory
Maximum I/O Memory per RX3i CPU	128 Kbytes of combined Input/Output memory
No of PLC Protocol Variables[94] (PPVs) per ECM850	5000
No of PPVs per RX3i CPU	20000

[93] *The polling rate for each IED connection can be configured by the IEC 61850 Configurator. ECM850 also supports unsolicited communication using report control blocks (RCB). The RCB can be used for faster updates irrespective of polling rate, based on RCB trigger options. Refer to PACSystems RX3i IEC 61850 Ethernet Communication Module User Manual, GFK-2849 for more details.*

[94] *PLC Protocol Variables is defined as the set of RX3i controller variables which represents the IEC 61850 protocol data attributes in a structured format in a variable list. This typically includes the additional variables which are required to perform WRITE operations to an IED. Refer to PACSystems RX3i IEC 61850 Ethernet Communication Module User Manual, GFK-2849 for more details.*

Indicator LEDs

The following table summarizes the light-emitting diode (LED) indicator functions. More detailed information about error indications and blink patterns is given in *PACSystems RX3i IEC 61850 Ethernet Communication Module User Manual,* GFK-2849.

LED	Description
OK	Indicates whether Module is able to perform normal operation.
LAN	Indicates access to and activity on the Ethernet local area network (LAN). The LAN LED indicates network packets are being processed by the network interface (not just passing through the embedded switch)
STATUS	Indicates the condition of the ECM850 during normal operation. It indicates whether an entry other than the startup event is present in Module's local log. STATUS can also indicate whether any of the MAC addresses are invalid.
CONN	Indicates whether Module has received its configuration from the RX3i CPU.
ACTIVE	Indicates the status of IED connections.
USB	Indicates activity on the USB port.
1, 2, 3, 4	Indicates link speed, link connection and link activity corresponding to each of the four external Ethernet ports.

Connectors

Secure Digital (SD) Card Slot

The SD card slot is designed to support non-volatile memory cards in both standard capacity (SD) and high-capacity (SDHC) formats. It is provided for future use.

Switched Ethernet Ports

The ECM850 connects to an IEC 61850 network by means of one or more of its four switched external Ethernet ports. These are located on the underside of Module. Two 8-conductor RJ-45 shielded twisted pair 10/100/1000 Mbps copper interfaces and two Small Form-factor Pluggable (SFP) cages provide flexibility in media selection.

Figure 410: ECM850 Ethernet Connections (Located Underneath Module)

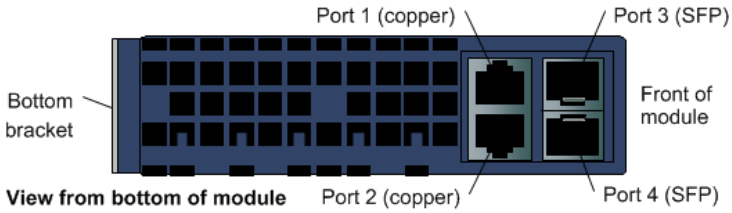

Module is assigned five Ethernet MAC addresses: one for each of the four external Ethernet ports and one for the internal switch.

Micro USB Port

The ECM850 has a USB Micro-B socket for connection to a computer running Windows Vista or Windows 7. The USB port can be used to access the Command Line Interface (CLI) function for the ECM850, using a terminal emulation application such as HyperTerminal. The Command Line Interface function can be used to monitor an ECM850 and check its operation. If a problem occurs, the Command Line Interface can be used to help determine the cause. A driver installation application is provided to configure a Windows computer to communicate with the ECM850 through its USB port. Refer to *PACSystems RX3i IEC 61850 Ethernet Communication Module User Manual,* GFK-2849 for more details.

Restart Pushbutton

The Restart pushbutton on an ECM850 can be used to manually restart Module without cycling power. The restart operation begins when the pushbutton is released.

16.15 Ethernet Interface Module: IC695ETM001

Figure 411: IC695ETM001

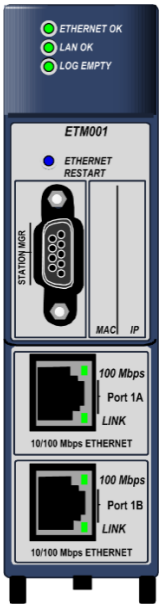

Figure 412: IC695ETM001-Kxxx

The Ethernet Interface Module, IC695ETM001-Jx and IC695ETM001-Kxxx, is used to connect a PACSystems RX3i controller to an Ethernet network. It enables the RX3i controller to communicate with other PACSystems equipment and with Series 90 and VersaMax controllers. The Ethernet interface provides TCP/IP communications with other PLCs, host computers running the Host Communications Toolkit or programmer software, and computers running the TCP/IP version of the programming software. These communications use the SRTP and Ethernet Global Data (EGD) protocols over a four-layer TCP/IP (Internet) stack.

Features of the RX3i Ethernet Interface Module include:

- Full PLC programming and configuration services
- Periodic data exchange using Ethernet Global Data (EGD)
- EGD Commands to read and write PLC and EGD exchange memory over the network.
- TCP/IP communication services using SRTP
- Comprehensive station management and diagnostic tools
- Extended PLC connectivity via IEEE 802.3 CSMA/CD 10Mbps and 100Mbps Ethernet LAN port connectors.
- Network switch that has Auto-negotiate, Sense, Speed, and crossover detection.
- Direct connection to BaseT (twisted pair) network switch, hub, or repeater without an external transceiver.

This module can be installed in any available RX3i I/O slot. Module supports insertion into and removal from an RX3i Universal Backplane which is under power. Refer to Hot Insertion and Removal.

Module supports firmware upgrades using the WinLoader software utility (if the host CPU has a serial port) or using a Web-based tool (if the host CPU has no serial port). Instructions are included with the firmware upgrade kit.

For more information about this module, please refer to the following publications:

- PACSystems RX3i and RSTi-EP TCP/IP Ethernet Communications User Manual, GFK-2224
- PACSystems TCP/IP Ethernet Communications Station Manager User Manual, GFK-2225

16.15.1 Ethernet Interface Specifications:

Specification	ETM001-Jx	ETM001-Kxxx
Ethernet processor speed	200 MHz	
Connectors	Station Manager (RS-232) Port: 9-pin female D-connector Two 10BaseT / 100BaseTX Ports: Two 8-pin female shielded RJ-45	Ports: Three autosensing RJ-45 ports.
LAN	IEEE 802.2 Logical Link Control Class I IEEE 802.3 CSMA/CD Medium Access Control 10/100 Mbps	IEEE 802.2 Logical Link Control Class I IEEE 802.3 CSMA/CD Medium Access Control 10/100/1000 Mbps
Number of IP addresses	One	One
Number of Ethernet Port Connectors	Two, both are 10BaseT / 100BaseTX with auto-sensing RJ-45 connection.	Three, all are 10BaseT/100BaseTX/1000BaseT with auto-sensing RJ-45 connection.
Embedded Ethernet Switch	Yes – Allows daisy chaining of Ethernet nodes.	Yes – Allows daisy chaining of Ethernet nodes.
Serial Port	Station Manager Port: RS-232 DCE, 1200 - 115200 bps.	Not Applicable.

For product standards and general specifications, refer to Appendix A:.

16.15.2 Ethernet Interface Ports

The latest version of the Ethernet Interface Module (-Kxxx) has three auto-sensing 10BaseT/100BaseTX/1000BaseT RJ-45 shielded twisted pair Ethernet ports for connection to a 10BaseT, 100BaseTX, or 1000BaseT IEEE 802.3 network.

The early version of the Ethernet Interface Module (-Jx) has two auto-sensing 10BaseT/100Base TX RJ-45 shielded twisted pair Ethernet ports for connection to either a 10BaseT or 100BaseTX IEEE 802.3 network. The port automatically senses the speed (10Mbps or 100Mbps), duplex mode (half duplex or full duplex) and cable (straight-through or crossover) attached to it with no intervention required. There is only one interface to the network (only one Ethernet MAC address and only one IP address).

16.15.3 Station Manager[95]

The built-in Station Manager function of the Ethernet Interface Module provides on-line supervisory access to the Ethernet Interface, through the Station Manager port or over the Ethernet cable. Station Manager services include:

- An interactive set of commands for interrogating and controlling the station.
- Unrestricted access to observe internal statistics, an exception log, and configuration parameters.
- Password security for commands that change station parameters or operation.

Refer to the *PACSystems TCP/IP Ethernet Communications Station Manager User Manual*, GFK-2225, for complete information on the Station Manager.

16.15.4 Ethernet Global Data (EGD)

Each PACSystems CPU supports up to 255 simultaneous Ethernet Global Data (EGD) exchanges. EGD exchanges are configured using the programmer and stored into the PLC. Both Produced and Consumed exchanges can be configured. PACSystems Ethernet Interfaces support both selective consumption of EGD exchanges and EGD exchange production and consumption to the broadcast IP address of the local subnet.

The Ethernet Interface can be configured to use SNTP to synchronize the timestamps of produced EGD exchanges.

The Ethernet Interface Module implements the capabilities of a Class 1 and Class 2 device. COMMREQ-driven EGD Commands can be used in the application program to read and write data into the CPU or other EGD Class 2 devices.

[95] *This feature only applies to ETM001-Jx. The Station Manager serial port has been replaced on the ETM001-Kxxx by an autosensing RJ45 port on the face of Module.*

16.15.5 ETM001-Jx Interface Controls and Indicators

LEDs

- The **Ethernet OK** LED indicates whether Module is able to perform normal operation. This LED is On for normal operation and flashing for all other operations. If a hardware or runtime failure occurs, the EOK LED blinks a two-digit error.
- The **LAN OK** LED indicates access to the Ethernet network. The LAN LED blinks when data is being sent or received over the network directed to or from the Ethernet interface. It remains On when the Ethernet interface is not actively accessing the network but the Ethernet physical interface is available and one or both of the Ethernet ports is operational. It is Off otherwise unless software load is occurring.
- The **Log Empty** LED is On during normal operation. It is Off if an event has been logged.
- Two Ethernet network LEDs (**LINK**) indicate the network link status.
- Two Ethernet network speed LEDs (**100 Mbps**) indicate the network data speed (10 (off) or 100 Mb/sec (on)).

Figure 413: Ethernet Features ETM001-Jx

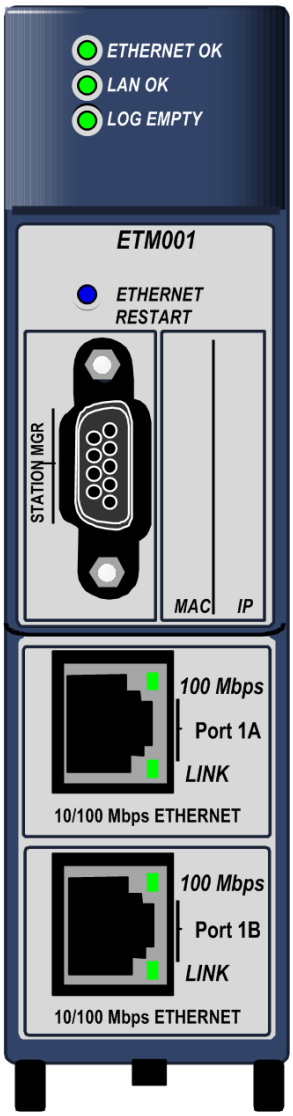

Ethernet Restart Pushbutton

This pushbutton is used to manually restart the Ethernet firmware without power cycling the entire system. It is recessed to prevent accidental operation.

Connectors

Module has two 10BaseT/100BaseTX Ethernet Network Port Connectors. There is only one interface to the network (only one Ethernet MAC address and only one IP address).

The Station Manager (RS-232) Serial Port is serviced via the D-connector on the front panel.

16.15.6 ETM001-Kxxx Interface Controls and Indicators

LEDs

- The **OK** LED indicates whether Module is able to perform normal operation. This LED is ON for normal operation and flashing for all other operations. If a hardware or runtime failure occurs, the **OK** LED blinks a two-digit error.
- The **LAN OK** LED indicates access to the Ethernet network. The **LAN OK** LED blinks when data is being sent or received over the network directed to or from the Ethernet interface. It remains ON when the Ethernet interface is not actively accessing the network, but the Ethernet physical interface is available and one or both of the Ethernet ports is operational. It is OFF otherwise unless software load is occurring.
- The **LOG EMPTY** LED is ON during normal operation. It is OFF if an event has been logged.
- The Ethernet network LED (LINK) indicate the network link status.
- Six Ethernet network speed LEDs (10/100/1000 Mbps) indicate the network data speed.

Figure 414: Ethernet Features ETM001-Kxxx

Ethernet Restart Pushbutton

This pushbutton is used to manually restart the Ethernet firmware without power cycling the entire system. It is recessed to prevent accidental operation.

Connectors

Module has three 10BaseT/100BaseTX/1000BaseT Ethernet Network Port Connectors. There is only one interface to the network (only one Ethernet MAC address and only one IP address).

The front panel has an autosensing RJ-45 connector that has replaced the serial connector on the earlier design of the interface module.

The bottom panel has two autosensing RJ-45 connectors designated as Lan 1 and Lan 2.

16.17 RX3i DNP3 Outstation Module: IC695EDS001

The PACSystems RX3i DNP3 Outstation Module IC695EDS001 is an Ethernet-connected module which fits in the RX3i backplane and permits the RX3i to behave as an Outstation on the DNP3 network, where it may interact with up to eight DNP3 masters.

Figure 415: EDS001 Features at a Glance

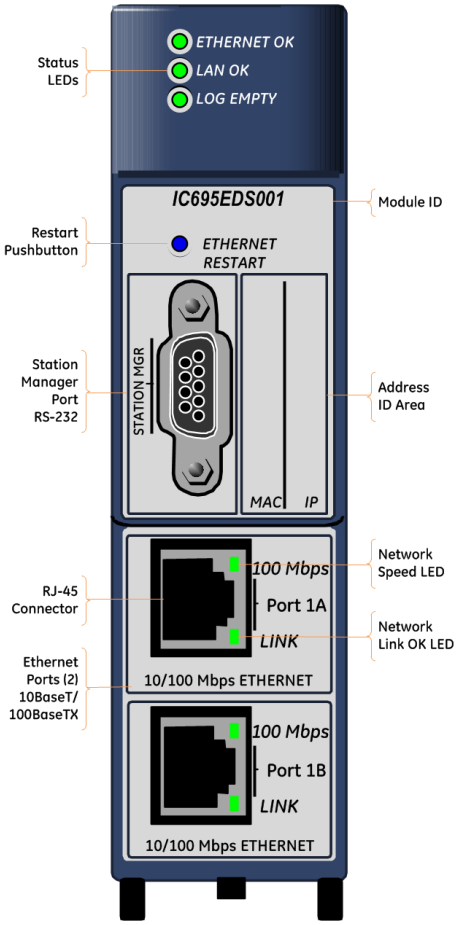

16.17.1 Module features:

- Two auto-sensing RJ-45 Ethernet ports with LED indicators
  - Connects via Ethernet at 10BaseT or 100BaseTX
  - Internal network switch with Auto-negotiate, Sense, Speed, and crossover detection
  - Supports Linear (daisy-chained) and Star network configurations
  - TCP/IP and LLA protocols supported
  - One Ethernet MAC Address and one IP Address per module
  - Time synchronization to SNTP Time Server
  - Recessed Ethernet Restarts pushbutton to manually restart the Ethernet firmware without power-cycling Module.
- Dedicated RS-232 Station Manager Port for network supervision
- LED behavior same as ETM001
- DNP3 configuration via a single COMMREQ command
  - Eight DNP3 Objects supported: DI, DI w/time, DO, DO w/time, CROB, analog output values, time setting, and class polls
  - Multiple RX3i memory types may be utilized for DNP3 data
  - Binary DI/DO
  - Analog (32-bit signed, 16-bit signed, or single-precision floating-point)
  - Supports unsolicited data communications with DNP3 Master
- Compatible with any rack-mounted RX3i CPU, including redundant controllers
  - Up to 4 EDS001 per RX3i, as allowed by available power and slots
  - Module can be installed in any available RX3i main rack I/O slot
  - Module supports insertion into and removal from an RX3i backplane which is under power.
  - Module supports firmware upgrades using the WinLoader software utility (if the host CPU has a serial port) or using a Web-based tool (if the host CPU has no serial port). Instructions are included with the firmware upgrade kit.[25]

For more information about this module, please refer to *PACSystems RX3i DNP3 Outstation Module IC695EDS001 User's Manual*, GFK-2911.

16.18 RX3i Ethernet IEC 104 Server Module

The PACSystems RX3i Ethernet IEC 104 Server Module, catalog number IC695EIS001, implements the IEC 60870-5-104 communications protocol. It permits a PACSystems RX3i controller to be connected to an Ethernet network using a standard TCP/IP connection scheme, allowing an IEC 104 Client to poll data from the Server, as well generate unsolicited communications from the Server back to the Client.

Two auto-sensing 10BaseT/100BaseTX RJ-45 shielded twisted-pair Ethernet ports permit direct connection to either a 10BaseT or 100BaseTX IEEE 802.3 network without an external transceiver. Line, Star and Daisy Chain topologies are supported.

The RX3i Ethernet IEC 104 Server Module hosts the IEC104 Server side protocol on a common RX3i ETM001 module hardware platform. Thus, many of the specifications and behaviors are shared with the ETM001 module including protocol support. IC695EIS001 is an Ethernet-connected module that fits in the RX3i backplane and permits the RX3i to behave as a Server on the IEC104 network. The data exchanges between the EIS001 module and IEC104 Client(s) are configurable, using a single COMMREQ instruction in the ladder logic or Structured Text program.

Figure 416: EIS001 Front View

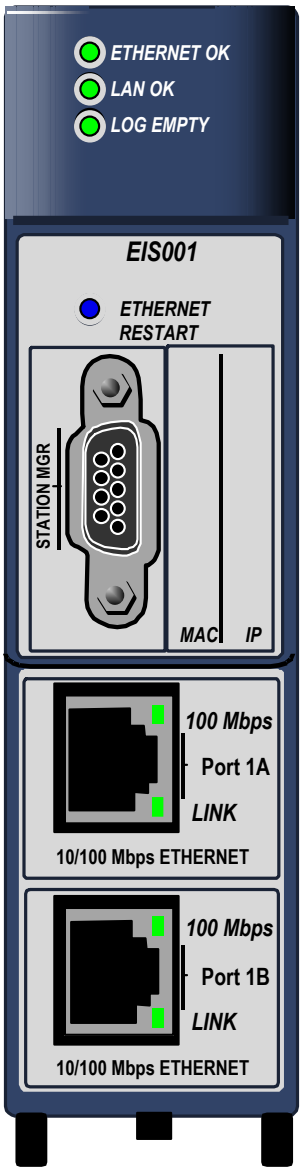

16.18.1 Module Features

- Supports one connection to the RX3i Controller data set specified in the configuration.
- Supports Interrogation and RBE for Single Point and Double Point data.
- Supports Interrogation and RBE for Regulated Step.
- Supports Interrogation and Measured data sets for Scaled, normalized, and single precision Float.
- Supports 56-bit IEC 60870-5-104 time format, with the default being 56-bit time format.
- Supports *Time Set*, and query of the RX3i Controller CPU Clock in UTC time.
- *Cause of Transmission* size is two octets.

RX3i Interface specifications:

- Up to four EIS001 per RX3i, as allowed by available power and slots.
- Module can be installed in any available RX3i main rack I/O slot.
- Module supports insertion into and removal from an RX3i backplane which is under power.

Module supports firmware upgrades using the WinLoader software utility (if the host CPU has a serial port) or using a Web-based tool (if the host CPU has no serial port). Instructions are included with the firmware upgrade kit.[25]

For more information about this module, please refer to *PACSystems RX3i IEC 104 Server Module IC695EIS001User's Manual*, GFK-2949.

16.20 Ethernet Network Interface Unit: IC695NIU001

The PACSystems RX3i Ethernet NIU, IC695NIU001, makes it possible to use PACSystems RX3i and Series 90-30 I/O remotely on an Ethernet network. System control can be provided by any master device that is capable of exchanging Ethernet Global Data.

The Ethernet NIU resides in an I/O station that consists of:

- an RX3i Universal Backplane (IC695CHS0xx)
- an RX3i power supply (IC695PSxxxx)
- the RX3i Ethernet NIU (IC695NIU001)
- one or more RX3i Ethernet modules (IC695ETM001), as required for Ethernet communications
- proprietary application software
- Optional Series 90-30 expansion backplanes.
- PACSystems RX3i and/or Series 90-30 modules, as appropriate for the application.

Figure 417: IC695NIU001

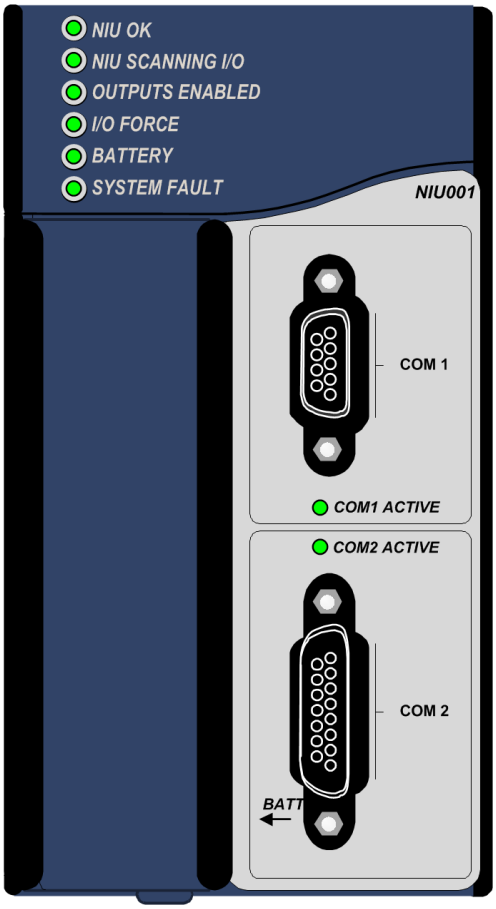

16.20.1 Ethernet NIU Features

- 20Kbytes of optional local logic. Supports all languages except C programming.
- 10 Mbytes of built-in flash memory for local user data storage.
- Battery-backed calendar clock.
- In-system upgradeable firmware.
- Two serial ports: an RS-485 serial port and an RS-232 serial port.
- Supports Ethernet communications via the backplane-based Ethernet Transmitter Module (IC695ETM001)
- Data exchange using Ethernet Global Data (EGD)
- TCP/IP communication services using SRTP
- Comprehensive station management and diagnostic tools
- Supports operation with redundant controllers

Module does not support insertion into or removal from an RX3i Universal Backplane which is under power (see *Hot Insertion and Removal Not Supported*).

This section gives a brief overview of the Ethernet NIU module. For details of installing, configuring, and operating an Ethernet NIU, please refer to the *PACSystems RX3i Ethernet Network Interface Unit User's Manual*, GFK-2439.

16.20.3 Compatibility

The Ethernet NIU PLUS is compatible with the same types of modules, backplanes, and other equipment as a PACSystems rack-mounted RX3i CPU. For a list of compatible products, refer to Section 1.3 Modules for RX3i Systems.

16.20.4 Specifications: NIU001

NIU001	Specifications
Battery	For estimated battery life under various conditions, refer to the *PACSystems Battery and Energy Pack Manual,* GFK-2741.
Power requirements	+3.3 Vdc: 1.25 A nominal, +5 Vdc: 1.0 A nominal
Operating Temperature	0 to 60°C (32 to 140°F)
Floating-point	Yes
Embedded communications	RS-232, RS-485
Serial Protocols supported	Modbus RTU Slave, SNP, Serial I/O, Modbus RTU Master by application “C” block
Backplane	Dual backplane bus support: RX3i PCI and 90-30-style serial
PCI compatibility	System designed to be electrically compliant with PCI 2.2 standard

For product standards and general specifications, refer to Appendix A:.

16.20.5 Ethernet Global Data Features

The Ethernet NIU communicates with its controller via Ethernet Global Data exchanges. One exchange is used to send outputs to the Ethernet NIU and another exchange is used to send inputs back to the controller.

The Ethernet NIU can also use Ethernet Global Data exchanges to receive the following COMMREQ commands from a PACSystems RX3i controller:

- Modbus Master – function codes 1, 2, 3, 4, 5, 6, 7, 15, 16, 17
- Genius – enable/disable outputs, switch BSM, clear fault, clear all faults, assign monitor, read diagnostic
- PROFIBUS Master – COMMREQs 1, 2, 4, 5, 6
- Motion (DSM314/DSM324) – load parameters
- High-Speed Counter – Data command
- DeviceNet Master – COMMREQs 1, 4, 5, 6, 7, 9
- Analog Module – HART Protocol COMMREQs

The Ethernet NIU executes the COMMREQ and sends the results back to RX3i using another Ethernet Global Data exchange.

16.20.6 Ports

The NIU has two independent, on-board serial ports, accessed by connectors on the front of Module. These ports provide serial interfaces to external devices.

Port 1 (COM1) is a DCE port that allows a simple straight-through cable to connect with a standard AT-style RS-232 port. It has a 9-pin, female, D-sub connector with a standard pin out.

Port 2 (COM2) is a DCE port that is RS-485 compatible. Port 2 has a 15-pin, female D-sub connector.

The Ethernet NIU does not have an Ethernet port. Ethernet communications are provided by one or more Ethernet Transmitter Modules (described previously in this chapter) located in the I/O Station.

Protocols Supported

Protocol	Port 1	Port 2
RTU (slave)	Yes	Yes
SNP Slave	Yes	Yes
Serial I/O[96]	Yes	Yes
Firmware Upgrade	ENIU in STOP/No I/O mode	
Message Mode (C Runtime Library Functions: serial read, serial write, sscanf, sprintf)	Yes	Yes

Serial Port Baud Rates

Protocol	Port 1 (RS-232)	Port 2 (RS-485)
Modbus RTU Slave protocol	1200, 2400, 4800, 9600, 19.2k, 38.4k, 57.6k, 115.2k	
Message	1200, 2400, 4800, 9600, 19.2k, 38.4k, 57.6k, 115.2k	
Firmware Upgrade via WinLoader	2400, 4800, 9600, 19.2k, 38.4k, 57.6k, 115.2k	
SNP Slave	1200, 2400, 4800, 9600, 19.2k, 38.4k, 57.6k, 115.2k	
Serial I/O	1200, 2400, 4800, 9600, 19.2k, 38.4k, 57.6k, 115.2k	

[96] *Modbus Master is supported in application code in Serial I/O mode.*

16.21 Ethernet Network Interface Unit: IC695NIU001 PLUS

The PACSystems RX3i Ethernet NIU *PLUS,* IC695NIU001, makes it possible to use PACSystems RX3i and Series 90-30 I/O remotely on an Ethernet network. Once set up by configuration, data exchange is completely automatic. System control can be provided by any master device capable of exchanging Ethernet Global Data (EGD). The Ethernet NIU automatically provides the controller with status information in each exchange. The application program logic in the controller can monitor this status data, and issue appropriate commands to the Ethernet NIU.

An RX3i Ethernet NIU station consists of:

- an RX3i Universal Backplane (IC695CHS0xx)
- an RX3i power supply (IC695PSxxxx)
- the RX3i Ethernet NIU (IC695NIU001)
- one or more RX3i Ethernet modules (IC695ETM001)
- proprietary application software
- optional Series 90-30 expansion backplanes.
- PACSystems RX3i and/or Series 90-30 modules, as appropriate for the application.

Module does not support insertion into or removal from an RX3i Universal Backplane which is under power (see Hot Insertion and Removal Not Supported*).* This module requires Machine Edition Logic Developer software, version 5.51 or later.

Figure 418: IC695NIU001 PLUS

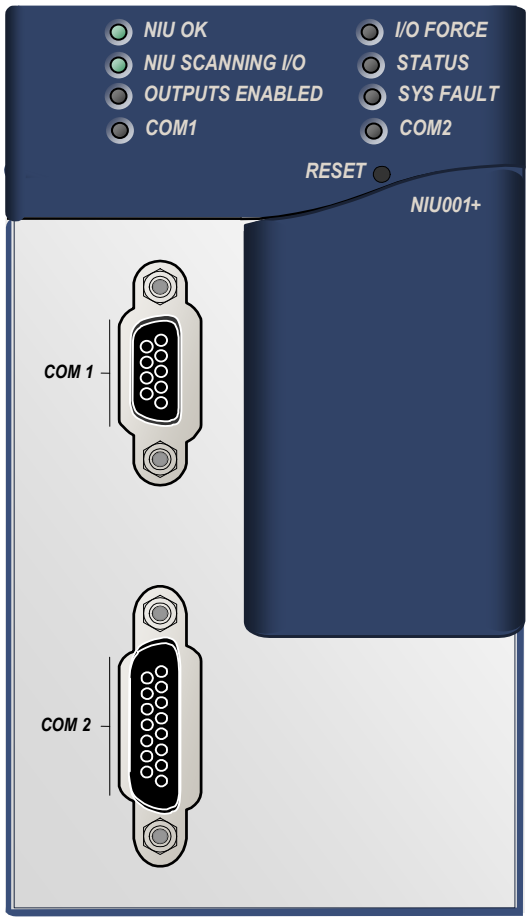

16.21.1 Compatibility

The Ethernet NIU PLUS is compatible with the same types of modules, backplanes, and other equipment as a PACSystems rack-mounted RX3i CPU. For a list of compatible products, refer to Section 1.3.

This module requires Logic Developer software, version 6.50 or later. Additional product enhancements require the use of later programmer software versions, as detailed in the *Ethernet NIU PLUS datasheet*, GFK-2598.

The NIU001 Classic and NIU001 Plus are interchangeable. An application created for an NIU001 PLUS can be used with an NIU001 Classic and vice versa.

16.21.2 Features: Ethernet NIU001 PLUS

- 20 Kbytes of optional local logic. Supports all languages except C programming.
- 10 Mbytes of built-in flash memory for local user data storage.
- Battery-backed Real Time Clock.
- In-system upgradeable firmware.
- Two serial ports: an RS-485 serial port and an RS-232 serial port.
- Supports Ethernet communications via the backplane-based Ethernet Interface module (IC695ETM001)
- Data exchange using EGD
- TCP/IP communication services using SRTP
- Comprehensive station management/diagnostic tools
- Supports operation with redundant controllers
- PACSystems RX3i controllers can send selected COMMREQs to the RX3i ENIU via EGD. The ENIU executes the COMMREQs and returns the results to the controller.
- During EGD configuration, RX3i Ethernet interfaces are identified by their Backplane/Slot locations.
- Supports display of module hardware revision, serial number and date code in Machine Edition Logic Developer software.
- Units manufactured with date codes greater than 1129 are compliant with EU RoHS Directive 2002/95/EC using the following exemptions identified in the Annex: 7a, 7c-I, & 7c-III.

16.21.3 Ethernet Global Data Features

The Ethernet NIU communicates with its controller via EGD exchanges. One exchange is used to send outputs to the ENIU and another exchange is used to send inputs back to the controller. The ENIU supports receiving outputs from redundant controllers. By sending the EGD exchange to a group address both controllers can receive the inputs. Up to 1300 bytes of outputs can be sent to a set of ENIUs from a controller. Each ENIU can send up to 1300 bytes of inputs to the controller.

A typical system might consist of a controller with five ENIUs. The controller sends 1300 bytes of outputs and each ENIU sends 100 bytes of inputs to the controller. This typical system would have its I/O updates occur in less than 25ms. Whenever the controller scan time is greater than 25ms, the update occurs at the scan rate of the controller. This performance timing is a guideline, not a guarantee, and assumes that there is no other traffic on the Ethernet link to the I/O. Performance data for other system configurations can be found in the *PACSystems RX3i Ethernet Network Interface Unit User's Manual,* GFK-2439.

16.21.4 Ethernet NIU COMMREQ Support

The Ethernet NIU supports COMMREQs that are sent to it by a C block application in a PACSystems RX3i controller. This feature is not available with other types of controllers. Ladder code in the RX3i CPU interfaces to the C block. The C block sends COMMREQ commands to the Ethernet NIU in an Ethernet Global Data Exchange. The Ethernet NIU executes the COMMREQ and sends the results back to the RX3i using another EGD exchange. The following COMMREQs can be sent in this way:

- Modbus Master – function codes 1, 2, 3, 4, 5, 6, 7, 15, 16, 17
- Genius – enable/disable outputs, switch BSM, clear fault, clear all faults, assign monitor, read diagnostic
- PROFIBUS Master – COMMREQs 1, 2, 4, 5, 6
- Motion (DSM314/DSM324) – load parameters
- High-Speed Counter – Data command
- DeviceNet Master – COMMREQs 1, 4, 5, 6, 7, 9
- Analog Module – HART Protocol COMMREQs.

In addition, any COMMREQ supported by a module in the Ethernet NIU can be sent as a Generic COMMREQ, with the exception of DeviceNet Master Send Extended Explicit

Message. For more information, refer to the *PACSystems RX3i Ethernet Network Interface Unit User's Manual,* GFK-2439.

16.21.6 Specifications: NIU001 PLUS

NIUS001 PLUS	Specifications
Real Time Clock battery life	Estimated 5 years. Battery must be replaced every 5 years on a regular maintenance schedule. **Note:** Module is shipped with a pull-tab on the battery. The pull-tab should be removed before installing Module.
Power requirements	+3.3 Vdc: 0.52 A nominal +5.0 Vdc: 0.95 A nominal
Operating Temperature	0 to 60°C (32 to 140°F)
Floating-point	Yes
Boolean execution speed, typical	0.072 ms per 1000 Boolean instructions
Embedded communications	RS-232, RS-485
Serial Protocols supported	Modbus RTU Slave, SNP, Serial I/O, Modbus RTU Master by application “C” block
Backplane	Dual backplane bus support: RX3i PCI and 90-30-style serial
PCI compatibility	System designed to be electrically compliant with PCI 2.2 standard
Ports	RS-232 Serial Port
	RS-485 Serial Port External isolation recommended. (For details, refer to *RS-485 Port Isolator, IC690ACC903,* GFK-1663.)

16.21.7 NIU001 PLUS vs. NIU001 Classic Comparison

Feature	NIU001 Classic	NIU001 PLUS
Processor	Celeron 300 MHz	Atom 510, 1.1 GHz
Real Time Clock Battery	Not supported	IC690ACC001
Memory Backup and Real Time Clock Battery	IC698ACC701	Not supported
Embedded communications	RS-232, RS-485	RS-232, RS-485
Power requirements	+3.3 Vdc: 1.25 Amps nominal +5.0 Vdc: 1.0 Amps nominal	+3.3 Vdc: 0.52 Amps nominal +5.0 Vdc: 0.95 Amps nominal
Performance	Same as CPU310. For performance data, refer to the *PACSystems RX3i and RSTi-EP CPU Reference Manual,* GFK-2222.	**Note:** The processor has been upgraded from a 300 MHz Celeron to a 1.1 GHz Atom processor. There have been many associated changes to the performance compared to the NIU001 Classic. For performance data, refer to the *PACSystems RX3i and RSTi-EP CPU Reference Manual,* GFK-2222R or later.
Boolean execution speed, typical	0.181 ms per 1000 Boolean instructions	0.072 ms per 1000 Boolean instructions
Battery and switch locations	For details, refer to the *PACSystems RX3i Ethernet Network Interface Unit User's Manual,* GFK-2439.	For details, refer to the *PACSystems RX3i Ethernet Network Interface Unit User's Manual,* GFK-2439

16.21.8 Ports

The NIU PLUS has two independent, on-board serial ports, accessed by connectors on the front of Module. These ports provide serial interfaces to external devices.

Port 1 (COM1) is a DCE port that allows a simple straight-through cable to connect with a standard AT-style RS-232 port. It has a 9-pin, female, D-sub connector with a standard pin out.

Port 2 (COM2) is a DCE port that is RS-485 compatible. Port 2 has a 15-pin, female D-sub connector.

The Ethernet NIU does not have an Ethernet port. Ethernet communications are provided by one or more Ethernet Transmitter Modules (described previously in this chapter) located in the I/O Station.

Protocols Supported

Protocol	Port 1	Port 2
RTU (slave)	Yes	Yes
SNP Slave	Yes	Yes
Serial I/O[97]	Yes	Yes
Firmware Upgrade	ENIU in STOP/No I/O mode	
Message Mode (C Runtime Library Functions: serial read, serial write, sscanf, sprintf)	Yes	Yes

Serial Port Baud Rates

Protocol	Port 1 (RS-232)	Port 2 (RS-485)
Modbus RTU Slave protocol	1200, 2400, 4800, 9600, 19.2k, 38.4k, 57.6k, 115.2k	
Message	1200, 2400, 4800, 9600, 19.2k, 38.4k, 57.6k, 115.2k	
Firmware Upgrade via WinLoader	2400, 4800, 9600, 19.2k, 38.4k, 57.6k, 115.2k	
SNP Slave	1200, 2400, 4800, 9600, 19.2k, 38.4k, 57.6k, 115.2k	
Serial I/O	1200, 2400, 4800, 9600, 19.2k, 38.4k, 57.6k, 115.2k	

[97] *Modbus Master is supported in application code in Serial I/O mode.*

16.22 PROFIBUS Master Module: IC695PBM300

The RX3i PROFIBUS Master Module, IC695PBM300, allows the RX3i CPU to send and receive data on a PROFIBUS-DP network.

Figure 419: IC695PBM300

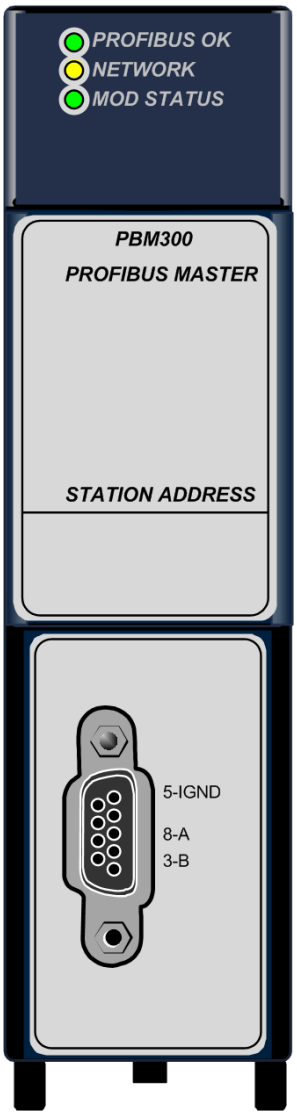

16.22.1 Features

The IC695PBM300 module provides the following features:

- supports up to 125 PROFIBUS-DP slaves
- supports up to 244 bytes of input data and 244 bytes of output data per slave
- Supports up to 3,584 bytes of input data and 3,584 bytes of output data total
- Supports all standard data rates
- Supports Sync and Freeze modes
- Supports DP-V1 Read, Write and Alarm messages
- PROFIBUS-compliant Module and Network Status LEDs

This module must be located in an RX3i Universal Backplane. Module supports insertion into and removal from an RX3i Universal Backplane which is under power. Refer to Section 2.6.4, *Hot Insertion and Removal*.

For more information about this module, please refer to the *PACSystems RX3i PROFIBUS Module User's Manual,* GFK-2301.

16.22.2 PROFIBUS Master Module Controls and Indicators

Network Connector

The PROFIBUS Master module has a 9-pin sub-D connector for attaching the bus cable. For pin assignments, segment length, cable type and termination requirements, refer to the *RX3i PACSystems PROFIBUS Modules User's Manual,* GFK-2301.

LEDs

The PROFIBUS Master module provides three PROFIBUS-compliant LEDs that indicate module and network status.

- The green OK LED indicates the presence of power, and completion of backplane reset.
- The bicolor Network LED is steadily yellow when Module is holding the PROFIBUS token and able to transmit PROFIBUS telegrams. It flashes yellow if Module is sharing the network with another PROFIBUS master. The Network LED is red if a communications problem such as a connection timeout exists with at least one slave on the network.
- The bi-color Mod Status LED indicates module status. When this LED is steadily green, Module is configured and has established a connection with a least one device on the network. If it is flashing green, Module may be waiting for a configuration or may have a firmware problem. If it is flashing yellow, Module is in boot loader mode, downloading firmware, or has a non-recoverable error. The rate of LED flashing provides additional status information as described in the *RX3i PROFIBUS Modules User's Manual.*

16.22.3 Specifications: PBM300

PBM300	Specifications
Backplane Current Consumption	440 mA at 3.3 Vdc
Data rates	Supports all standard data rates (9.6 kbps, 19.2 kbps, 93.75 kbps, 187.5 kbps, 500 kbps, 1.5 Mbps, 3 Mbps, 6 Mbps and 12 Mbps)
Status Information Available	Slave Status Bit Array Table Network Diagnostic Counters DP Master Diagnostic Counters Firmware Module Revision Slave Diagnostic Address

16.23 PROFIBUS Slave Module: IC695PBS301

The IC695PBS301 provides slave communications on a PROFIBUS DP network. The slave module automatically exchanges data with a master device. The slave module has no bus access rights. It can only acknowledge received messages or transmit messages to a master upon request.

Figure 420: IC695PBS301

The PROFIBUS Slave module provides the following PROFIBUS communications features:

- Ability to read up to 244 bytes of input data from the network, and send up to 244 bytes of output data
- Support for all standard PROFIBUS data rates
- Support for DP-V1 Read, Write and Alarm messages
- PROFIBUS-compliant module and network status LEDs

This module must be located in an RX3i Universal Backplane. Module supports insertion into and removal from an RX3i Universal Backplane which is under power. Refer to Section 2.6.4, *Hot Insertion and Removal*.

The PROFIBUS module receives its firmware upgrades indirectly from the host controller CPU using the WinLoader software utility (if the host CPU has a serial port) or using a Web-based tool (if the host CPU has no serial port). Instructions are included with the firmware upgrade kit.[25]

16.23.1 PROFIBUS Slave Module Controls and Indicators

Network Connector

The PROFIBUS Slave module has a 9-pin sub-D connector for attaching the bus cable. For pin assignments, segment length, cable type and termination requirements, refer to the *RX3i PACSystems PROFIBUS Modules User's Manual,* GFK-2301.

LEDs

The PROFIBUS Slave module provides three PROFIBUS-compliant LEDs that indicate module and network status.

- The green PROFIBUS OK LED indicates the presence of power, and completion of backplane reset.
- The bicolor Network LED is yellow when Module is able to transmit PROFIBUS telegrams. It is red if a critical communications problem has occurred.
- The bi-color Mod Status LED indicates module status. When this LED is steadily green, Module is configured and has established a connection with the network master. If it is flashing green, Module may be waiting for a configuration or may have a firmware problem. If it is flashing yellow, Module is in boot loader mode, downloading firmware, or has a non-recoverable error. The rate of LED flashing provides additional status information as described in the *RX3i PROFIBUS Modules User's Manual.*

16.23.2 Specifications: PBS301

PBS301	Specifications
Backplane current consumption	440 mA at 3.3 Vdc
Data rates	Supports all standard data rates (9.6 kbps, 19.2 kbps, 93.75 kbps, 187.5 kbps, 500 kbps, 1.5 Mbps, 3 Mbps, 6 Mbps and 12 Mbps)
Status information available	Slave Status Word

For product standards and general specifications, refer to Appendix A:.

16.24 PROFINET Controller Module: IC695PNC001

Figure 421: IC695PNC001 (-Bxxx version)

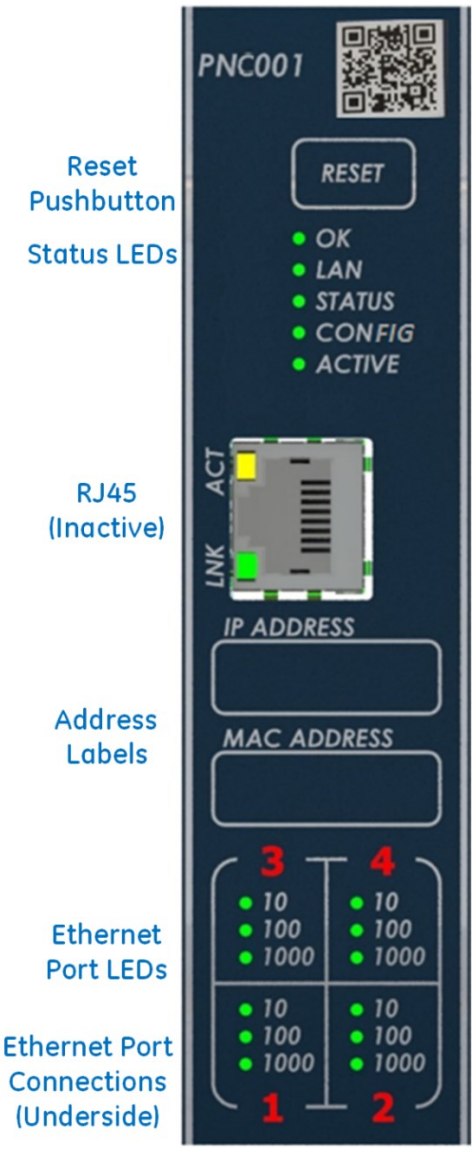

The PACSystems RX3i PROFINET Controller (PNC) module, IC695PNC001[98], connects a PACSystems RX3i controller to a high-speed PROFINET local area network. It enables the RX3i controller to communicate with IO-Devices on the LAN. The PNC module provides all the functions, services, and protocols required for certification as a PROFINET IO Version 2.2 IO Controller, running at both 100 Mbps and 1 Gbps.

The PNC supports 10/100/1000 Mbps Copper, 100/1000 Mbps Multi-mode Fiber, and 100/1000 Mbps Single-mode Fiber. The LAN can include media interfaces of more than one type. PROFINET communications on the LAN require 100 and 1000 Mbps link speed. 10 Mbps cannot be used for PROFINET communications. However, 10 Mbps can be used for other types of Ethernet traffic such as ping and telnet.

16.24.1 Features:

- Full programming and configuration services for the PROFINET Controller, VersaMax PROFINET Scanner and third-party IO-Devices using PAC Machine Edition.
- Firmware upgrades using the WinLoader software utility (if the host CPU has a serial port) or using a Web-based tool (if the host CPU has no serial port). Instructions are included with the firmware upgrade kit.
- Support for star, ring, and daisy-chain/line network topologies.
- Four switched Ethernet ports - two 8-conductor RJ-45 shielded twisted pair 10/100/1000 Mbps copper interfaces and two Small Form-factor Pluggable (SFP) cages for user-supplied SFP devices.
- Internal clock synchronized with the RX3i CPU for time-stamped diagnostics entries.
- Reset pushbutton to manually restart Module without power cycling the system.
- LEDs: OK, LAN, STATUS, CONFIG, ACTIVE, and four banks of Port LEDs.
- Compliant with EU RoHS Directive 2002/95/EC using the following exemptions identified in the Annex: 7c-I and & 7c-III.

For installation instructions and operating details, refer to the following manuals:
PACSystems RX3i PROFINET Controller Manual, GFK-2571
PACSystems RX3i PROFINET Controller Command Line Interface Manual, GFK-2572

[98] *Refer to GFK-2571K or later for details concerning hardware differences between -Ax and -Bxxx versions of PNC001.*

PACSystems HSB Hot Standby CPU Redundancy User's Manual, GFK-2308.

16.24.3 Specifications: PNC001

PNC001	Specifications	
PROFINET Support	PROFINET Version 2.2 General Class A IO-Controller Redundantly controlled operation conforms to PROFINET V2.3 Type S-2 System Redundancy. Note that the CPE100 / CPE115 is a simplex PROFINET IO-Controller.	
CPU Compatibility	Requires CPU315, CPU320, CPE302/CPE305, CPE310 or CPE330 with firmware version 7.0 or higher. Simplex or redundantly-controlled PROFINET I/O requires CRU320 release 8.00 or higher. For the current status of CPE330 features, refer to *PACSystems RX3i and RSTi-EP CPU Reference Manual*, (GFK-2222Z or later). Note that CPE400, CPS400 (Non-safety), CPL410, EPXCPE205/210/215/220/240 and CPE100/CPE115 feature an embedded PROFINET IO-Controller; these are standalone CPUs that do not support IC695PNC001.	
Power Requirements[99] ,	Rev. –Ax:	Rev. –Bxxx:
with no SFP devices installed	3.3 Vdc: 0.5 A	3.3 Vdc: 0.5 A
with two SFP devices installed, 0.35A per SFP	3.3 Vdc: 1.2 A maximum	3.3 Vdc: 1.2 A maximum
	5 Vdc: 1.5 A maximum	5 Vdc: 0.75 A maximum
Operating Temperature Range[99]	Rev. -Axxx: 0 to 60°C	Rev. -Bxxx: -25 to 60°C
	Note: See GFK-2571K, Section 1.4 for de-rating conditions	
Number of PROFINET Port Connectors[99]	PNC001 –2 RJ45 and 2 SFP Cages located on the underside of module (SFP devices not included, available separately). Embedded PROFINET IO-Controller – 2 RJ45.	
Front Panel Connectors[99]	PNC001-Ax: One micro USB for communication with a computer using Command Line Interface. PNC001-Bxxx: One RJ45. Disabled.	
Command Line Interface Supported	PNC001-Ax – Yes. PNC001-Bxxx: No. Embedded PROFINET IO-Controller – No.	
LAN[99]	IEEE 802.2 Logical Link Control Class I IEEE 802.3 CSMA/CD Medium Access Control 10/100/1000 Mbps	
Maximum I/O Memory	128 Kbytes of combined input/output memory per PROFINET Controller **Note:** RSTi-EP CPE100/CPE115 support a maximum of 8 IO Devices. The combined input and output memory is equivalent to the input /output memory requirements of those 8 devices.	
Hot-swappable	PNC001 – Yes; Embedded PROFINET IO-Controller – No.	

[99] *For CPE400,CPS400, CPL410, CPE330 EPXCPE205/210/215/220/240 and CPE100/CPE115, refer to the equivalent product specifications in the PACSystems RX3i and RSTi-EP CPU Reference Manual, (GFK-2222AE or later).*

PNC001	**Specifications**
CPU Status Bits	32
PROFINET IO-Device Data Update Rates on the PROFINET Network	Configurable: 1 ms, 2 ms, 4 ms, 8 ms, 16 ms, 32 ms, 64 ms, 128 ms, 256 ms, and **Note**: For CPE100/CPE115, Update Rates below 16ms are not recommended.
Number of IP Addresses	One
Number of MAC Addresses	PNC001 – 5. One per external PROFINET port and one internal. Embedded PROFINET IO-Controller – 1.
System Maximum Limits	
PROFINET Controllers per RX3i CPU	Four PNC001 maximum. Must be located in main CPU rack. Cannot be located in a remote node. CPE330 supports one embedded PROFINET Controller plus up to four PNC001. CPE400, CPS400 (Non-Safety), CPL410, EPXCPE205/210/215/220/240 & CPE100/CPE115 support one embedded PROFINET Controller. Since these are standalone CPUs, they do not support any PNC001 in their hardware configuration.
Max IO-Devices per IO-Controller (at the maximum update rate interval, 16ms to 256ms)	PNC001 – 128 CPE330/CPE400/CPS400 (Non-Safety) – 32 (simplex) or 20 (Hot Standby Redundancy) CPL410 – 64 (simplex) or 32 (Hot Standby Redundancy) EPXCPE205 – 8 EPXCPE210/215 - 16 EPXCPE220/240 - 32 RSTi-EP CPE100/CPE115 – 8 For limits at shorter update intervals, refer to *PROFINET Controller Loading Limits* in GFK-2571K, Chapter 3.
Max MRP Clients when configured as MRP Manager	PNC001 – 63 Embedded PROFINET Controller CPE330/CPE400/CPS400 (Non-Safety) – 31 Embedded PROFINET Controller CPL410 – 63 Embedded PROFINET Controller EPXCPE205 – 7 Embedded PROFINET Controller EPXCPE210/215 - 15 Embedded PROFINET Controller EPXCPE220/240 – 31Embedded PROFINET Controller CPE100/CPE115[100] – 8
IO-Devices per Network	Maximum of 255 simplex or 255 redundant I/O Devices per network, spread across a maximum of 8 I/O Controllers. The actual total number of devices supported per network depends on the topology. For details, refer to GFK-2571K

[100] *Effective with firmware v9.30, CPE100/CPE115 support MRP.*

PNC001	Specifications
IO-Devices per RX3i CPU	Maximum of 255 simplex or 255 redundant I/O Devices per RX3i CPU, spread across up to four PROFINET Controllers.[101]
IO-Devices per RSTi-EP CPU	Maximum of 8 simplex I/O Devices for CPE100/CPE115. Maximum of 32 simplex I/O Devices for EPXCPEs.
IO-Controllers per Network	Eight maximum
Input and output memory per IO-Controller	Maximum of 128 Kbytes combined input and output memory **Note**: RSTi-EP CPE100/CPE115 support maximum 8 IO Devices so the combined input and output memory is equivalent to maximum input /output memory supported by 8 devices.
Number of PROFINET Slots per device	256
Number of PROFINET Subslots per slot	256
Number of PROFINET Submodules per RX3i CPU	2048
Programmer Limits	
Number of IO-Controllers	128 (32 RX3i CPU targets × 4 IO-Controllers per RX3i CPU)
Number of IO-Devices	2048 (128 per network × 16 PROFINET networks)
Total number of devices	2176 (does not include backplanes, power supplies, or I/O modules)

For product standards and general specifications, refer to Appendix A:.

[101] *In the case of CPE330, with embedded PROFINET activated, it is possible to have five PROFINET Controllers.*

16.25 PROFINET Scanner Module: IC695PNS001/IC695PNS101

Figure 422: IC695PNS001-Bxxx

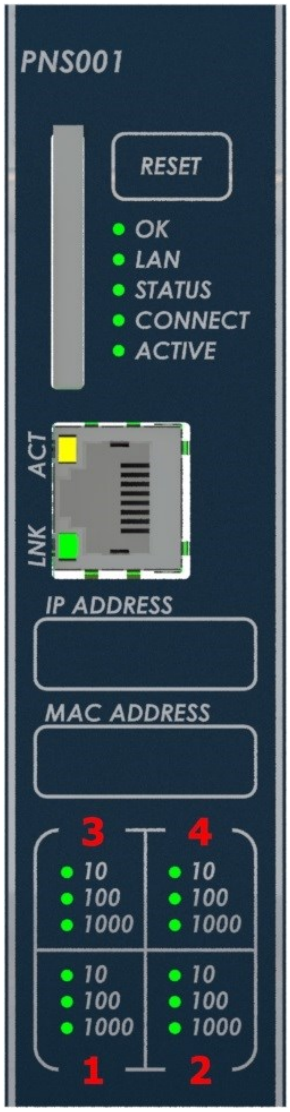

The PACSystems RX3i PROFINET Scanner (PNS) module, IC695PNS001, connects a remote universal RX3i I/O rack of Series 90-30 or RX3i modules to a PROFINET I/O Controller. The PROFINET Scanner scans Modules in its rack, retrieving input data and providing output data, and exchanges that data on the PROFINET I/O LAN at the configured production rate.

The PNS manages PROFINET communication and module configuration between an I/O Controller and modules in the remote rack. If network communications are lost, the PNS manages I/O states according to the individual module configurations.

The PNS supports 10/100/1000 Mbps Copper, 100/1000 Mbps Multi-mode Fiber, and 100/1000 Mbps Single-mode Fiber. PROFINET communications on the network require 100 or 1000 Mbps link speed. Although 10 Mbps cannot be used for PROFINET communications, 10 Mbps can be used for other types of Ethernet traffic such as PING.

IC695PNS101 provides all the features of IC695PNS001-Bxxx, but has been optimized for the Sequence of Events application. Refer to the *PACSystems RX3i Sequence of Events User Manual*, GFK-3050.

16.25.1 Features

- Programming and configuration services for all supported Series 90-30 and RX3i I/O Modules using PAC Machine Edition. Refer to table below for compatibility details.
- Support for daisy-chain/line, star, or ring (PROFINET Media Redundancy Protocol (MRP)) topologies.
- Four switched Ethernet ports - two 8-conductor RJ-45 shielded twisted pair 10/100/1000 Mbps copper interfaces and two Small Form-factor Pluggable (SFP) cages for user-supplied SFP devices.
- The network can include media interfaces of more than one type.
- Support for transfer of I/O Device Name to another PNS module using an SD card. This eliminates the need to connect a configuration tool, such as PAC Machine Edition when replacing a module.

16.25.2 Front Panel Port

The front-panel port is used for installing new firmware for the PNS001 module itself, and also for downstream modules which support indirect firmware upgrades. PNS001 revision –Bxxx is equipped with an RJ45 Ethernet port and supports secure firmware upgrade via a web browser. PNS001 revision -Axxx is equipped with a USB port and supports firmware upgrade using the WinLoader tool.[25]

For additional information, please refer to *PACSystems RX3i PROFINET Scanner Manual*, GFK-2737.

16.25.3 LED Indications: PNS001

OK LED

The OK LED indicates whether Module is able to perform normal operation.

LED	Color	Status
	Green, on	OK
	Off	Not OK

LAN LED

The LAN LED indicates access to and activity on the Ethernet network. The LAN LED indicates network packets are being processed by the network interface (not just passing through the embedded switch).

LED	Color	Status
	Blinking on	The network interface in Module is active
	Off	No activity

STATUS LED

The STATUS stays Green during normal operation.

LED	Color	Status
	Green, on	Normal Operation
	Red, blinking	A MAC address read from nonvolatile memory is invalid. Ports with invalid MAC addresses remain disconnected from the Ethernet network.

CONN LED

The CONN LED indicates the status of PROFINET connections.

LED	Color	Status
	Green, on	At least one PROFINET connection (AR) exists with an I/O Controller.
	Amber, blinking	No device name configured.
	Off	No PROFINET connection (AR) exists.

ACTIVE LED

The active LED indicates the Scanner is connected to a PROFINET I/O Controller that is controlling the I/O data for the PNS's I/O modules.

LED	Color	Status
	Green, on	PNS is connected to a PROFINET I/O Controller that is controlling I/O Module IO data.
	Off	PNS is not connected to a PROFINET I/O Controller.

Refer to the *PACSystems RX3i PROFINET Scanner Manual,* GFK-2737 for LED indications at power-up.

Port LEDs

The PROFINET Scanner Port LEDs differ between -Bxxx and -Axxx versions. Refer to the *PACSystems RX3i PROFINET Scanner Manual,* GFK-2737G or later, to understand the differences.

Revision Axxx:

LED	Color	Status
	Blue, on	Link connected, 1000 Mbps
	Blue, blinking	Port active, 1000 Mbps
	Green, on	Link connected, 100 Mbps
	Green, blinking	Port active, 100 Mbps
	Purple, on	Link connected, 10 Mbps
	Purple, blinking	Port active, 10 Mbps
	Off	The associated Ethernet port is not connected to an active link
	Red, on	Port 3 and port 4 only. Incompatible SFP plugged into port.

Revision Bxxx:

Port Number LED (Digit representing Port Number is backlit by an LED)

LED	Color	Status
	Red, on	Port 3 and 4 only: Error such as incompatible SFP.
	Off	No Port error.

1000 Speed LED

LED	Color	Status
	Green on	Link connected, 1000 Mbps
	Green blinking	Port active, 1000 Mbps
	Off	The associated Ethernet port is not connected to an active link at 1000Mbps

100 Speed LED

LED	Color	Status
	Green, on	Link connected, 100 Mbps.
	Green, blinking	Port active, 100 Mbps
	Off	The associated Ethernet port is not connected to an active link at 100Mbps

10 Speed LED

LED	Color	Status
	Green, on	Link connected, 10 Mbps.
	Green, blinking	Port active, 10 Mbps
	Off	The associated Ethernet port is not connected to an active link at 10Mbps

USB LED

The USB LED indicates activity on the USB port (-Axxx only).

LED	Color	Status
	Green, on	A USB cable is connected.
	Green, blinking	USB port activity
	Off	No USB port activity

16.25.5 Specifications: PNS001

PNS001	Specifications	
PROFINET Support	PROFINET Version 2.3 Class A IO-Device Redundantly controlled operation conforms to PROFINET V2.3 Type S-2 System Redundancy.	
Controller CPU Version Required	RX3i CPU315/CPU320 with firmware version 7.10 or later RX3i CPE302/CPE305/CPE310 with firmware version 7.10 or later RXi Controller with firmware version 7.80 or later	
PAC Machine Edition Version Required	Version 8.5 SIM2 or later	
Power Requirements	Rev. –Bxxx or later: 3.3 Vdc: 0.6 A with no SFP devices installed, 1.3 A maximum (two SFP devices installed, 0.35 A per SFP)	Rev. –Axxx: 3.3 Vdc: 1.2 A with no SFP devices installed, 1.9 A maximum (two SFP devices installed, 0.35 A per SFP)
	Rev. –Bxxx or later: 5 Vdc: 0.7 A maximum	Rev. –Axxx: 5 Vdc: 1.1A maximum
Operating Temperature Range	Rev. -Bxxx or later: -25 to 60°C de-rated to 57°C: • If 100 Mbps Fiber SFPs installed, or • If Copper SFPs operating at 1 Gbps	Rev. -Axxx: 0 to 60°C de-rated to 57°C: • If 100 Mbps Fiber SFPs installed, or • If Copper SFPs operating at 1 Gbps
Number of PROFINET Ports	Two RJ45 and Two SFP Cages (SFP devices not included, available separately.)	
Front Ethernet Port (for firmware upgrades)	Rev. –Bxxx or later: One RJ45 supporting 10/100/1000 Mbps Ethernet for firmware upgrades.	Rev. – Axxx: One Micro-USB connector. USB 2.0 compliant running at full-speed (12 MHz)
SD Card	Supports SD and SDHC cards.	
PNS Status and Control Bits	32 input status bits and 32 output control bits	
PROFINET I/O production rate (ms) (I/O Update Rate)	Configurable selections: 1, 2, 4, 8, 16, 32, 64, 128, 256, or 512 ms	
Number of MAC Addresses	Rev. -Bxxx or later: 6 One per external port (including additional front panel port) and one internal for switched ports.	Rev. -Axxx: 5 One per external port and one internal.
I/O Station Maximum Limits	Number of I/O Modules per station	Number of backplane slots in the host RX3i rack less one for PNS001 module itself less the number of slots occupied by the RX3i power supply

PNS001	Specifications	
	I/O data per station	2880 bytes total 1440 bytes of input data 1440 bytes of output data
Configuration	V2.3 GSDML file. The file is included with PAC Machine Edition; available for import into 3rd-Party tools. *Note:* Configuration software that supports GSDML V2.3 Menu List elements (such as PAC Machine Edition 8.0 or later) is required to display the configuration parameters of most IC695xxx I/O modules.	

For product standards and general specifications, refer to Appendix A:.

At the time of publication, the following CPU firmware, programming software and backplane hardware versions are required. Refer to the *PACSystems RX3i PROFINET Scanner Manual,* GFK-2737, for updated information.

16.25.6 Compatibility: PNS001

PNS001	Compatibility	
Controller CPU firmware	CPE400, CPL410, CPS400 (Non-Safety) with LAN2 configured as embedded PROFINET Controller. EPXCPE205/210/215/220/240 with LAN2 configured as embedded PROFINET Controller. EPSCPE100/115 with LAN2 configured as embedded PROFINET Controller. CPU330 firmware version 8.45 or later CPU315/CPU320 firmware version 7.10 or later CPE302/CPE305/CPE310 firmware version 7.10 or later RXi Controller firmware version 7.80 or later CRU320 Primary Firmware version 8.00	
Programmer software	PAC Machine Edition version 8.50 SIM 2 or later	
RX3i PROFINET Controller	IC695PNC001 with firmware version 1.20 or later (Simplex I/O) IC695PNC001 with firmware version 2.00 or later (Redundant I/O)	
RX3i backplane hardware	The following ***minimum*** backplane hardware revision ***must*** be used: IC695CHS012-BAMP IC695CHS016-BAMP IC695CHS012CA-BAMP IC695CHS016CA-BAMP or IC695CHS012-CA (or later) IC695CHS016-CA (or later) IC695CHS012CA-CA (or later) IC695CHS016CA-CA (or later) or IC695CHS007-AA (or later) When installing, operating, or maintaining the IC695PNS001, personnel must ensure any electrostatic charge is discharged through the use of a grounded ESD strap or other means. This requirement does not apply if the IC695PNS001 is used with the following backplane revisions: IC695CHS012-EA (or later) IC695CHS016-EA (or later) IC695CHS012CA-EA (or later) IC695CHS016CA-EA (or later) or IC695CHS007-BA (or later)	
Small form-factor pluggable modules	IC695SPC100A or later	RX3i 10/100/1000Base-T copper SFP
	IC695SPF002A or later	RX3i 100Base-FX (fiber 2 km) SFP (Multi-mode fiber - MMF)
	IC695SPF550A or later	RX3i 1000Base-SX (fiber 550 m) SFP (MMF)
	IC695SPF010A or later	RX3i 1000Base-LX (fiber 10 km) SFP (Single-mode fiber - SMF)
RX3i modules	For a complete list, refer to *PACSystems RX3i PROFINET Scanner Manual, GFK-2737*.	

16.25.8 Compatibility: PNS101

PNS101	Compatibility	
Controller CPU firmware	CPE400, CPL410, CPS400 (Non-Safety) with LAN2 configured as embedded PROFINET Controller. EPXCPE205/210/215/220/240 with LAN2 configured as embedded PROFINET Controller. EPSCPE100/115 with LAN2 configured as embedded PROFINET Controller. CPU330 firmware version 9.55 or later CPU315/CPU320 firmware version 7.10 or later CPE302/CPE305/CPE310 firmware version 7.10 or later RXi Controller firmware version 7.80 or later CRU320 Primary Firmware version 8.00	
Programmer software	PAC Machine Edition version 9.50 SIM 8 or later	
RX3i PROFINET Controller	IC695PNC001 with firmware version 1.20 or later (Simplex I/O) IC695PNC001 with firmware version 2.00 or later (Redundant I/O)	
RX3i backplane hardware	The following ***minimum*** backplane hardware revision ***must*** be used: IC695CHS012-BAMP IC695CHS016-BAMP IC695CHS012CA-BAMP IC695CHS016CA-BAMP or IC695CHS012-CA (or later) IC695CHS016-CA (or later) IC695CHS012CA-CA (or later) IC695CHS016CA-CA (or later) or IC695CHS007-AA (or later) When installing, operating, or maintaining the IC695PNS101, personnel must ensure any electrostatic charge is discharged through the use of a grounded ESD strap or other means. This requirement does not apply if the IC695PNS101 is used with the following backplane revisions: IC695CHS012-EA (or later) IC695CHS016-EA (or later) IC695CHS012CA-EA (or later) IC695CHS016CA-EA (or later) or IC695CHS007-BA (or later)	
Small form-factor pluggable modules	IC695SPC100A or later	RX3i 10/100/1000Base-T copper SFP
	IC695SPF002A or later	RX3i 100Base-FX (fiber 2 km) SFP (Multi-mode fiber - MMF)
	IC695SPF550A or later	RX3i 1000Base-SX (fiber 550 m) SFP (MMF)
	IC695SPF010A or later	RX3i 1000Base-LX (fiber 10 km) SFP (Single-mode fiber - SMF)
RX3i modules	For a complete list, refer to *PACSystems RX3i PROFINET Scanner Manual, GFK-2737*.	

16.26 RX3i CEP Carrier: IC695CEP001 RX3i CEP Expansion Carrier: IC694CEE001

Figure 423: IC695CEP001 with IC694CEE001 Attached

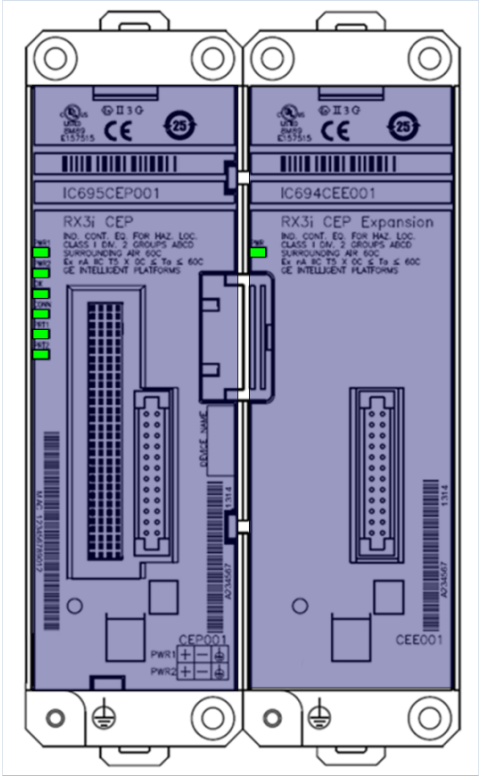

The PACSystems RX3i Carrier IC695CEP001 interfaces a remote node, consisting of one RX3i I/O module, to a PROFINET I/O Local Area Network (LAN).

The optional RX3i Expansion Carrier IC694CEE001 attaches to the RX3i CEP001 Carrier and provides the ability to add one additional RX3i IC694 I/O module to the remote node.

The RX3i CEP001 Carrier functions as a PROFINET IO-Device. The RX3i CEP001 Carrier's main Remote I/O functions include:

- Scanning all Modules within the remote node (input and output scan)
- Publishing data on the PROFINET network to a PROFINET IO-Controller at a user-specified production period
- Receiving data from a PROFINET IO-Controller on the PROFINET network at a customer-specified production period
- Managing PROFINET communication and module configuration between a PROFINET IO-Controller and modules within the remote node
- Managing the state of the I/O when communications is lost
- Publishing fault information (alarms, diagnostics, and such) to the PROFINET IO-Controller
- Provides power to the CEE001 Expansion Carrier

The insertion and removal of I/O modules is the same as in an RX3i Universal Backplane.

The RX3i CEP001 Carrier provides two RJ-45 Ethernet receptacles. It supports 10/100BASE-TX Ethernet standard interface.

16.26.1 Features

- Full programming and configuration services for all supported RX3i I/O Modules using PAC Machine Edition. Refer to the section, *Supported I/O Modules*.
- Support daisy-chain/line, star, or ring (redundant media) network topologies.
- Two switched Ethernet ports: two eight-conductor RJ-45 shielded-twisted pair 10/100 Mbps copper interfaces.
- USB port for field updates of firmware using WinLoader.
- Supports Hot-standby CPU Redundancy using PROFINET I/O: requires RX3i CEP001 2.01 GSDML version 2.3 or later.
- Supports HART® Pass Through using PROFINET.

Note: The USB port is for firmware upgrades only. It is not intended for permanent connection.

Note: The CEP001 Carrier requires a user-supplied +24 Vdc power source.

16.26.2 Normal Operation of Individual LEDs: CEP001 & CEE001

Power LEDs

The RX3i CEP001 Carrier has two Power LEDs, PWR1 and PWR2 that indicate whether the power is applied and is within range corresponding to the two power sources.

LED	Color	Status
	Green, ON	Power is applied at the minimum specified level
	OFF	The power supply does not have power or has failed.

® *HART® is a registered trademark of the HART Communication Foundation of Austin, Texas USA. Any use of the term HART hereafter in this document, or any document referenced by this document, implies the registered trademark.*

OK LED

The OK LED indicates whether the CEP001 Carrier is able to perform normal operation.

LED	Color	Status
	Green, ON	RX3i CEP001 is OK
	Amber, ON	Either the RX3i CEP001 Carrier or IO module has a fault
	Amber, blink pattern	Fatal error. Flashes once between error codes.
	Fast blinking	CEP001 has no valid MAC addresses
	OFF	CEP001 has an unrecoverable fault

Connect LED

The CONN LED indicates the status of PROFINET connections.

LED	Color	Status
	Green, ON	At least one PROFINET connection (AR) exists with an IO-Controller
	Amber, blink pattern	Fatal error. Flashes once between error codes blinked on the OK LED
	Amber, blink in 1Hz	No device name configured
	OFF	No PROFINET connection (AR) exists

Port LEDs

The RX3i CEP001 has two Port LEDs, PRT1 and PRT2 that indicate link speed, link connection and link activity corresponding to the two external Ethernet ports.

LED	Color	Status
	Green, ON	Link connected, 100 Mbps
	Green, blinking	Port active, 100 Mbps
	Amber, ON	Link connected, 10 Mbps
	Amber, blinking	Port active, 10 Mbps
	Amber, blink pattern	Fatal error. Flashes once between error codes blinked on the OK LED
	OFF	The associated Ethernet port is not connected to an active link (can be disabled by configuration)

***Note*:** Multiple LEDs can blink in patterns that indicate special conditions, such as a request for module identification. Refer to *PACSystems RX3i PROFINET Scanner IC695CEP001 User Manual,* GFK-2883.

Power LED (IC694CEE001)

The RX3i Expansion Carrier CEE001 has one PWR LED to indicate whether the power provided by the RX3i CEP001 Carrier is within range.

LED	Color	Status
	Green, ON	OK
	Amber, ON	Power 24 Vdc and/or 5 Vdc is not in specified range
	OFF	No power

16.26.3 Ordering Information

Model	Description
IC695CEP001	RX3i CEP001 Carrier with RJ-45 Copper Ethernet Interface
IC694CEE001	RX3i CEE001 Expansion Carrier

16.26.4 Specifications

Specification	Description	
PROFINET support	PROFINET Version 2.3 Class A IO-Device	
RX3i Controller version required	IC695CPU315/CPU320/CPE302/CPE305/CPE310/CPE330/CRU320, firmware v8.50 or later IC69PNC001 PROFINET IO-controller with firmware version 2.20 or later	
PAC Machine Edition version required	Version 8.6 with SIM 3 or later	
Power requirements[102]	IC695CEP001: 5.25 W (0.22 A) at 24 Vdc with or without Expansion Carrier (IC694CEE001) DC power supply input range: 19.2 to 30 Vdc	
Module dimensions	177.2 x 51 x 35 mm (6.98” x 2.01” x 1.38”). Same for CEP001 and CEE001.	
Operating temperature	0 to 60°C (32 to 140°F) maximum surrounding air temperature	
Number of Ethernet port connectors	IC695CEP001: Two RJ-45 10/100Base-TX receptacles IC694CEE001: None	
USB connector (for firmware upgrades)	IC695CEP001: One Micro-B connector. USB 2.0 compliant running at full-speed (12 MHz) in device mode IC694CEE001: None	
PNS status and control bits	32 input status bits and 32 output control bits	
I/O data update on the PROFINET LAN	Configurable: 1 ms, 2 ms, 4 ms, 8 ms, 16 ms, 32 ms, 64 ms, 128 ms, 256 ms, and 512 ms	
Number of IP addresses	One; supports Classless Inter-Domain Routing (CIDR)	
Number of MAC addresses	Three; one per external port and one internal. External MAC addresses are only used for specialized Ethernet protocols such as MRP or LLDP.	
I/O station maximum limits	Number of I/O modules per station	IC695CEP001: One
		IC695CEP001 with IC694CEE001: Two
	I/O data per station	1024 bytes total 512 bytes of input data 512 bytes of output data
Configuration	Configured using PAC Machine Edition when used with a PACSystems RX3i PROFINET Controller module as part of an RX3i High-speed I/O LAN system. V2.3 GSDML file available for import into 3rd-Party tools.	

For product standards and general specifications, refer to Appendix A:.

[102] *Value does not include the power consumption of the installed I/O modules. When calculating the total power requirements, add the power consumption of the I/O modules according to the I/O module datasheet.*

16.26.5 Quick Start: CEP001 & CEE001

Carrier Installation Requirements

The CEP001 Carrier and optional Expansion Carrier CEE001 can be mounted on a DIN-rail or on a panel.

Adequate installation space is required for:

1. Clearance for communications port cables.
2. Power wiring.
3. Operating the DIN latch.

The RX3i CEP001 Carrier with an I/O module attached requires an enclosure with minimum depth of 165 mm.

Rated thermal specifications are based on a clearance of 5.1 cm (2”) above and below the equipment and 2.54 cm (1”) to the left of the RX3i CEP001 Carrier.

Figure 424: Mounting Diagram CEP001 & CEE001

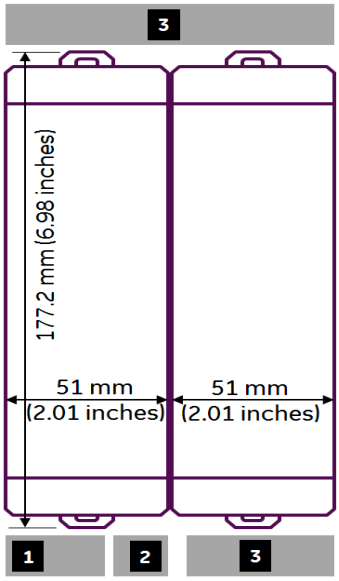

Connecting the CEE001 Expansion Carrier to the CEP001 Carrier

Figure 425: Attaching CEE001 to CEP001

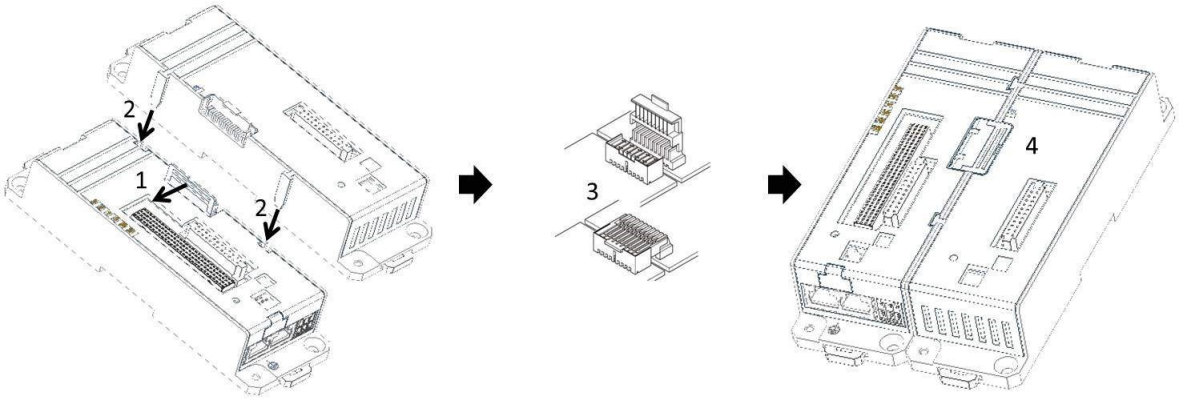

1. Open the connector cap on the RX3i CEP001 Carrier.
2. Slide and install the RX3i CEE001 Expansion Carrier along the guide slots on the RX3i CEP001 Carrier.
3. When the Expansion Carrier is aligned with the CEP001 Carrier, engage the expansion connectors.
4. Close the connector cap.
5. Secure the Expansion Carrier to the DIN rail or panel. Refer to *Installing an RX3i CEP001 Carrier on a DIN-rail or* Panel Mounting.
6. Connect the grounding hole on the CEE001 to the panel or enclosure as described in

7. Grounding below.

Installing an RX3i CEP001 Carrier on a DIN-rail

The carrier mounts on a standard EN 50022, 35 x 7.5 mm DIN-rail. Conductive (unpainted) finish is required for proper grounding.

For best resistance to vibration, the DIN-rail should be installed horizontally on a panel using screws spaced approximately 15 cm (6”) apart.

Figure 426: DIN Rail Mounting Sequence

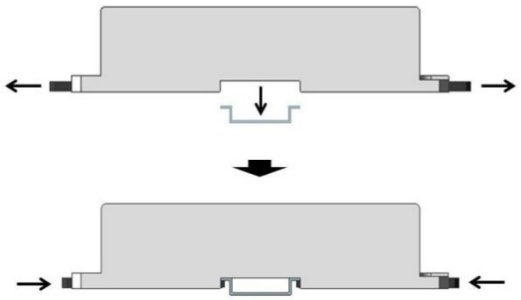

1. With a small flathead screwdriver, pull out the two DIN-rail latches and stand the carrier on the DIN-rail.
2. Push in the two DIN-rail latches so that the latches hold the DIN-rail.

Panel Mounting

For applications requiring maximum or long-term resistance to mechanical vibration and shock, the panel-mounting method is strongly recommended. A minimum panel thickness of 2.4 mm (.093”) is required. The mounting diagram (Figure 427 below) applies to both the CEP001 Carrier and CEE001 Expansion Carrier.

Note 1: Tolerances on all dimensions are ±0.2 mm (0.078”) non-cumulative.

Note 2: Apply 1.1 to1.4 Nm (10 to12 in/lbs.) of torque to M3.5 (#6-32) steel screws threaded into tapped holes in the panel.

Figure 427: Panel Mounting Diagram: CEP001 or CEE001

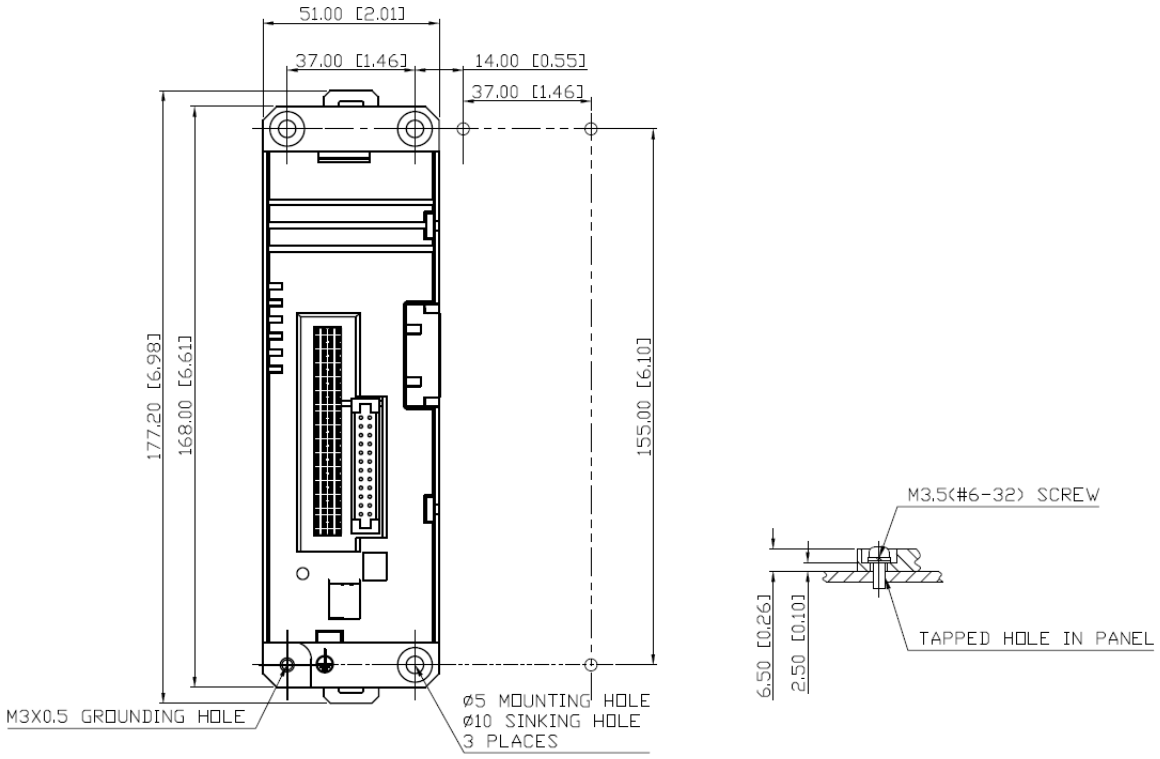

Grounding

⚠ WARNING

All CEP001 Carriers in a system must be grounded to minimize electrical shock hazard. Failure to do so can result in severe personal injury.

The RX3i CEP001 Carrier and CEE001 Expansion Carrier each provide two grounding connection contacts:

- Grounding clips at the back of the carrier, which require DIN-rail installation
- Grounding screw hole at bottom-left of the carrier

Note: When the Carrier is mounted on a DIN-rail, the grounding clips on the back of the Carrier do not provide an adequate ground connection. The Carrier's metal back must also be grounded using a separate conductor.

Ground each Carrier to the panel or enclosure using a minimum AWG #12 (3.3 mm^2) wire with ring terminals. Use an M3 screw, star lock washer and a flat washer to connect the wire at the Carrier's grounding hole. Connect the other end of the ground wire to a tapped hole in the grounded mounting panel or enclosure, using a machine screw, star lock washer and flat washer. Alternately, if the panel has a ground stud, use a nut and star lock washer for each wire on the ground stud to ensure adequate grounding. Where connections are made to a painted panel, the paint should be removed so clean, bare metal is exposed at the connection point. Terminals and hardware used should be rated to work with the aluminum carrier material.

Note: The star lock washer method is suitable for a shield ground, but not suitable for a safety ground.

Figure 428: Ground Connection Diagram

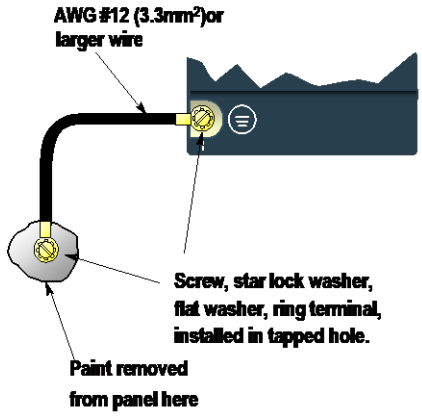

Installing Modules on the Carrier

The insertion and removal of I/O modules is the same as in an RX3i Universal Backplane.

⚠ CAUTION

Do not install a Power Supply module on the CEP001 or CEE001 Carrier. Attempting to do so could damage Module and/or the Carrier.

Unsupported Modules

When an unsupported I/O module is inserted into either the RX3i CEP001 Carrier or RX3i CEE001 Expansion Carrier, no alarm is reported to indicate this.

For the latest updated list of supported I/O modules, refer to the section, *Supported I/O Modules.*

Some unsupported I/O modules have the same Distinguishing Class (for example, IC694MDL740 has the same Distinguishing Class as IC694MDL742).

⚠ CAUTION

If an unsupported module is inserted in the CEP001 or CEE001 Carrier, Module will not be recognized correctly and could cause damage to the Carrier or Module.

Connecting Power Supplies

You will need:

Note: Two power supplies are required if using redundant power supplies.

- One 24 Vdc power supply which provides a low voltage/limited current (LVLC) power source. (For example, the combination of an isolated DC supply and a fuse, listed 30 Vdc minimum and 3 A maximum, connected in series with the input.)
- Power cord with 28 to16 AWG / 0.08 to1.32 mm^2 wires
- Ferrules for 28 to16 AWG wires (optional)
- Frame ground wire, 28 to16 AWG
- Input power terminal block; provided (WAGO Part Number 713-1103)
- Small flathead screwdriver (jeweler's size 14)

Note: For CE Mark purposes, input power lines to the CEP001 Carrier should be limited 30 m (98 ft) or less.

Note: Before inserting the wires into the power connector terminal block, use a small flathead screwdriver to release the spring clamp on the terminal block.

1. Using the power cord, attach the power supply to the power terminal block as diagrammed in Figure 429.
2. Recommended wire stripping length is 6 to7 mm (0.25").
3. If using redundant power supplies, connect the second power supply to the input power terminal block.
4. Insert the input power terminal block into the Input Power connector.

Note: There are no user-serviceable fuses in the CEP001 Carrier.

Figure 429: Power Terminal Block CEP001

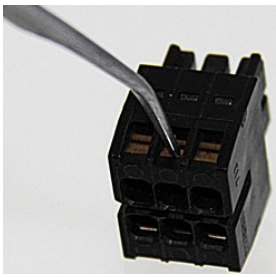

Connecting Power to RX3i CEP001 Carrier

Figure 430: CEP001 Power Terminal Wiring

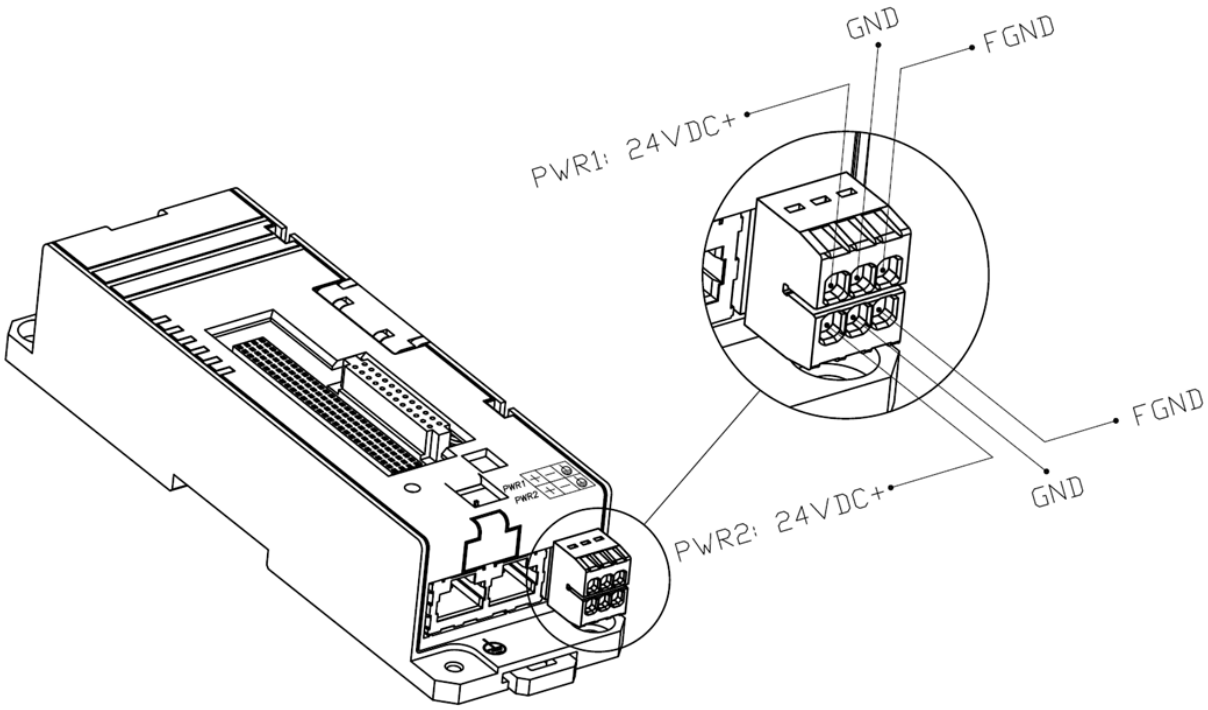

Adding a Redundant Power Supply

To add a redundant power supply to a system that is already in operation

1. Remove power from the primary power supply to the RX3i CEP001 carrier
2. Remove the power terminal block from the carrier.
3. Without disturbing the primary power supply input lines, connect the redundant power supply input lines to the power terminal block.
4. Insert the power terminal block into the Input Power connector.
5. Apply power to the redundant power supply. The PWR2 LED on the RX3i CEP001 carrier should turn on.
6. Apply power to the primary power supply. The PWR1 LED on the CEP001 Carrier should turn on.

Note: For the procedure to swap a redundant power supply, refer to *PACSystems RX3i PROFINET Scanner IC695CEP001 User Manual,* GFK-2883.

Connecting the CEP001 to the PROFINET Network

The two external RJ-45 Ethernet ports, which provide 10/100 Mbps copper interfaces, are on the bottom of the CEP001 Carrier.

Figure 431: Locations of Ethernet Ports CEP001

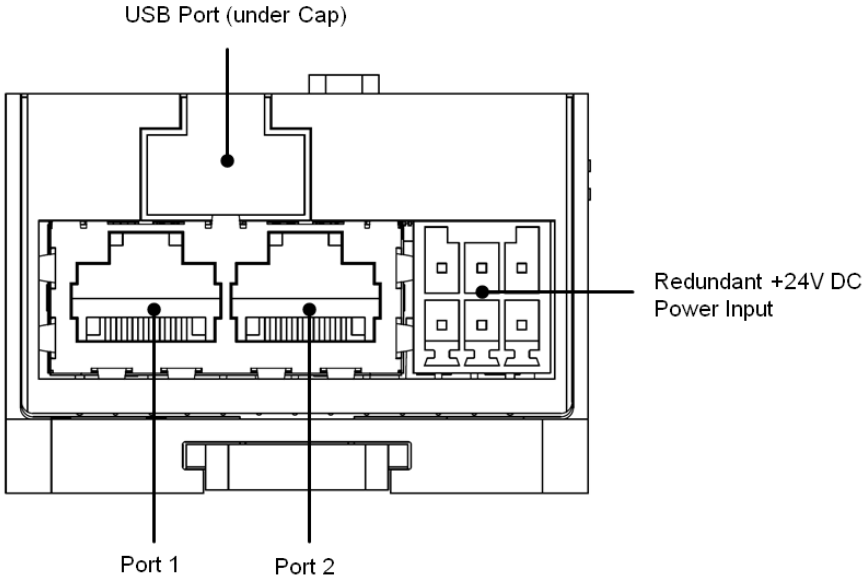

Devices connected to the RX3i CEP001 ports should have Ethernet Auto-negotiation enabled. The RX3i CEP001 Carriers and other participating devices can be connected in a daisy-chain/line, or star topology.

⚠ CAUTION

Do not connect both ports on the Ethernet interface, directly or indirectly, to the same device so as to form a circular network unless Media Redundancy is enabled with one node actively set up as the Media Redundancy Manager.

Supported Network Media Types and Distances

PROFINET I/O over-wired infrastructure must be 100Mbps full-duplex or faster. The hardware is capable of operating at 10Mbps but should not be used for PROFINET.

Media Type	Connector Type	Wavelength (nm)	Media Type	Core Size (µm)	Modal Bandwidth (MHz – km)	Maximum Distance
10/100BASE-TX	RJ-45	-	CAT5/CAT5e/CAT6	-	-	100 m (328 ft)

Assigning an I/O Device Name to the CEP001

Before attempting to connect to or configure the CEP001, the I/O Device Name must be set with a Discovery and Configuration Protocol (DCP) tool.

Configuring the CEP001/CEE001 Node and Resident I/O Modules on a PROFINET Network

PAC Machine Edition is the primary tool used to configure an RX3i PROFINET network. The GSDML file for the RX3i CEP001 is included with PAC Machine Edition, or may be downloaded from the support website link provided at the end of this document. To obtain the GSDML for import into a 3rd-Party tool, contact Emerson.

16.26.6 Supported I/O Modules

For a complete list of Supported I/O modules, refer to PACSystems RX3i CEP PROFINET Scanner User Manual, GFK-2883.

16.27 Genius Communications Gateway Module IC695GCG001

The RX3i Genius Communications Gateway, IC695GCG001 (GCG001), interfaces Genius I/O devices on a Genius Serial Bus to a PROFINET IO Controller (IC695PNC001).

The GCG001 operates as a Genius Bus Controller on a Genius network. It scans the Genius I/O devices configured to it, retrieving input data and providing output data. It then exchanges that data with its configured PROFINET IO Controller over its Ethernet interfaces at the configured production rate. The GCG001 can manage communications for up to 31 Genius I/O devices on a single Genius Serial Bus.

The GCG001 also operates as an I/O Device, controlled by the RX3i PROFINET IO Controller (PNC001) to which is attached. Thus, when correctly configured, the entire Genius Bus, including the GCG001 itself, becomes visible to the controlling PLC (in this case an RX3i). Note that the GCG001 operates only with PLC PROFINET IO Controllers.

PROFINET operates on an Ethernet network. If the Ethernet network or Genius serial bus communications are lost, the GCG001 manages IO states according to the individual module configurations.

Both PROFINET and Genius may be set up in Redundant configurations.

Genius Communications Gateway features include:

- Attachment of two RJ-45 Ethernet connections (Ports 1 & 2)
- Support for both star (switched) and linear (daisy-chained) network topologies
- Supports Ethernet Media Redundancy Protocol (MRP)
- LEDs to indicate Ethernet status (ACT & LINK)
- Attachment Genius bus connections (marked Genius A).
- Supports Genius Redundancy consisting of a single Genius bus with two GCG001 Gateways, one at SBA #30 and the other at SBA #31.
- LED to indicate Genius Communications Status (COM)
- LEDs to indicate module status (refer to module header)
- Panel-mount (typical). Optional mounting in RX3i expansion slot.
- Cable tie-down loop on underside of module (at front)
- 24 Vdc power connector on underside of module
- Secure Digital (SD) Card Slot, accessible at rear of module
- Firmware load pushbutton, accessible at rear of module

Refer to *PACSystems RX3i Genius Communications Gateway User Manual,* GFK-2892.

Figure 432: IC695GCG001

16.27.1 LED Indications: GCG001

The four LEDs in Module header provide a visual indication of the GCG001 module status.

POWER — indicates the presence of power to Module.

LED	Color	Status
	Green, ON steady	Power supply is good.
	OFF	Power supply is off or not good.

OK — indicates GCG001 readiness to perform normal module operations.

LED	Color	Status
	Green, ON steady	Module able to perform normal operations.
	Green/Amber, blinking	Module loading main operating system
	Amber, ON steady	Module loading boot-loader operating system
	OFF	Module has an unrecoverable fault or power is not applied.

FAULT — indicates the detection of faults by Module.

LED	Color	Status
	OFF	No faults present.
	Red, blinking 2Hz	DCP Device Identification Signal received.
	Red, ON	A fault or other Ethernet-type diagnostic data exists on the Gateway

CONNECT — indicates status of the connection to a PROFINET controller.

LED	Color	Status
	OFF	One or more connections with PROFINET Controllers have been established to this device.
	Red, blinking	Device trying to connect to a controller. Continuous if device has not been assigned a valid station name.
	Red, ON	No PROFINET Controller connection

The two LEDs associated with each Ethernet port (used here as PROFINET ports) are labelled ACT and LINK. These LEDs provide information about activity on that particular port.

PORT 1, PORT 2 LINK — indicates connection status on Ethernet ports.

LED	Color	Status
	Green, ON steady	Ethernet connection established
	OFF	No Ethernet connection

PORT 1, PORT 2 ACT — indicates activity on Ethernet ports.

LED	Color	Status
	Amber, blinking	Communications occurring on port
	OFF	No communication

COM — indicates the status of Genius Bus communications.

LED	Color	Status
	Green, ON steady	The Genius Bus is configured and operating properly.
	Green, blinking	A Genius Bus error has been detected.
	OFF	The Genius Bus has failed or no Genius Bus configuration has been received.

16.27.2 Specifications: GCG001

GCG001	Specifications
Communications Support	Operates only under the control of a PROFINET Controller
Power Requirements	External 24 Vdc: (±10%) 0.2 A
Operating Temperature Range	0 to 60°C (32 to 140°F)
Number of Port Connectors	Two RJ-45
Local Area Network (LAN)	IEEE 802.2 Logical Link Control Class I IEEE 802.3 CSMA/CD Medium Access Control 10/100 Mbps
SD Card	The SD card slot is designed to support a Secure Digital (SD) non-volatile memory card in standard capacity format. Size: 2Gbyte max. This optional card has two distinct uses: (1) Backup storage of some key Ethernet configuration data (2) Loading new GCG001 module firmware.
Status Data	64 (two banks of 32 bits)
Genius Bus Support	Supports One Genius Bus. Serial 1, Serial 2, Shield In and Shield Out, as marked. Up to 31 additional devices supported per Genius Bus. Selectable Baud Rate, per Genius specifications. Genius Hot Standby and Duplex Redundancy supported.
HHM Compatibility	IC66*HHM501
Other Genius Compatibility	Refer to *PACSystems RX3i Genius Communications Gateway User Manual,* GFK-2892, Genius Communications Gateway User Manual
Configuration	GSDML file is available on the Support website for download and import into PAC Machine Edition. The GSDML supporting a firmware release is part of the firmware upgrade kit available on the Support website.
Hot Swappable	Yes (does not draw power from RX3i Backplane). However, cannot be done without disconnecting external 24 Vdc power. If configured to support Genius Hot Standby, the loss of a single GCG001 will be tolerated; otherwise not.

For product standards and general specifications, refer to Appendix A:.

16.28 IC695PRS015 Pressure Transducer Module

Figure 433: IC695PRS015

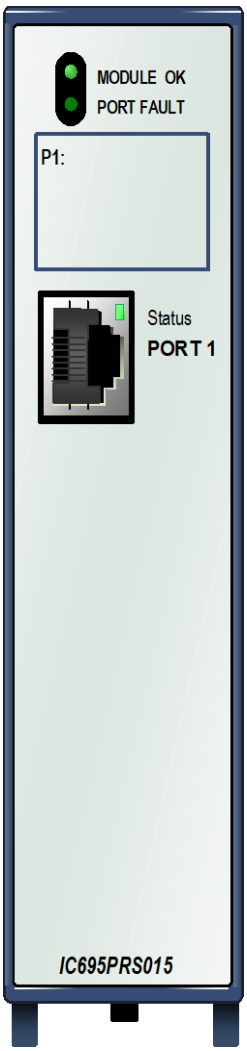

The PACSystems RX3i Pressure Transducer module expands the serial communications capabilities of the RX3i system to communicate with up to 15 Honeywell LG1237 Smart Pressure Transducer sensors.

The IC695PRS015 module provides an independent, isolated serial port. Up to four Pressure Transducer modules can be located in the main PACSystems RX3i backplane.

Additional module features include:

- Port-to-backplane isolation
- RS-485 communication
- Module fault status reporting (Watchdog, Ram Fail, Flash Fail)
- Module identity and status reporting, including LED status indicators
- Flash memory for future upgrades

These modules must be located in an RX3i Universal Backplane. Module supports insertion into and removal from an RX3i Universal Backplane which is under power. Refer to *Hot Insertion and Removal*.

16.28.1 LEDs: PRS015

PRS015 Status	LED Description
Module OK	Module OK LED indicates the status of Module. Off: Module is not receiving power from the RX3i backplane or Module has failed self-test. Solid green: Module has been configured. Blinking green, rapidly: Module is executing power-up diagnostics. Blinking green, slowly: Module has not received configuration from the CPU. If configuration is not successful, Module will continue to blink in this mode. Blinking amber: If a problem occurs, Module OK LED blinks amber. The blink code (refer to below) indicates the cause of the error. 1 = watchdog expired 2 = RAM error 6 = Invalid CPU Master Interface version 7 = CPU heartbeat failure 8 = Failed to get semaphore
PORT FAULT	The Port Fault LED indicates the status of the port. Green: There are no faults present on any enabled port. Amber: There is a fault on the port.
Note: The area below Module LED can be used to record identifying information about the port.	
Port STATUS	The Port Status LED blinks green when there is activity on the corresponding port.

16.28.2 Specifications: PRS015

PRS015	Specifications
Number of Serial Ports	One
Connectors	RJ-45
Number of modules per CPU	Four in the main CPU backplane
Backplane power requirements	0.7 A maximum at 3.3 Vdc 0.115 A maximum at 5.0 Vdc
LEDs	Module OK, Port Fault, Port Status
Port Type	RS-485 four-wire (full duplex)
Baud rate	375 kBaud
Input Impedance	Zin > 96 kΩ for RS-485/422
Max Overvoltage	± 25V
Channel-Channel Crosstalk	–55dB minimum
Isolation	Port to Backplane and to frame ground: 250 Vac continuous; 1500 Vac for 1 minute, 2550 Vdc for one second

For product standards and general specifications, refer to Appendix A:.

To meet emission and immunity requirements for the EMC directive (CE mark), shielded cable must be used with this module.

16.28.4 PRS015 Configuration

Module Parameters

Parameter	Default	Description
Channel Value Reference Address	%AIxxxxx	Starting address for the input data of Module. This defaults to the next available %AI block.
Channel Value Reference Length	30 (word oriented memory) 480 (bit oriented memory)	The number of words or bits used for the input data of Module. Each channel is mapped to 2 words or 32 bits, whether the channel is used or not.
Inputs Default	Hold Last State	In the event of module failure or removal, this parameter specifies the state of the Channel Value References. Force Off: Sets input channel values to 0 and clears all alarm flags. Hold Last State: Channel Values hold their last state.
Diagnostic Reference Address	%Ixxxxx	Starting address for the channel diagnostics status data. This defaults to the next available %I block.
Diagnostic Reference Length	0	The number of bits or words required for the Channel Diagnostics data. Default is 0, which means mapping of Channel Diagnostics is disabled. Change this to a non-zero value to enable Channel Diagnostics mapping. 0 or 30 (Word oriented memory) 0 or 480 (bit oriented memory)
Command Input Data Reference Address	%AIxxxxx	Starting address for the command input data of Module. This defaults to the next available %AI block.
Command Input Data Reference Length	6 (word oriented memory) 96 (bit oriented memory)	The number of bits or words required for the command input data of Module.
Command Output Data Reference Address	%AQxxxxx	Starting address for the command output data of Module. This defaults to the next available %AQ block.
Command Output Data Reference Length	6 (word oriented memory) 96 (bit oriented memory)	The number of bits or words required for the command output data of Module.
Module Status Reference Address	%Ixxxxx	Starting address for the status data of Module. This defaults to the next available block in the selected memory area.
Module Status Reference Length	0	The number of bits required for Module Status data. Default is 0, which means mapping of Module Status data is disabled. Change this to a non-zero value to enable Module Status data mapping. 2 (word oriented memory) 32 (bit oriented memory)
I/O Scan Set	1	The scan set, as defined in the CPU Scan Sets tab, to be assigned to this module. The scan set determines how often the CPU polls the data. Valid range: 1 through 32.

Channel Parameters (Channels 1 through 15)

Parameter	Default	Description
Channel Enable	Disabled	Disabled, Enabled, Simulation Mode When Enabled, the Channel Value will be updated with the value of the associated LG1237. When Simulation Mode is selected the associated LG1237 will simulate a specified pressure reading.
Simulated Value	10.0	Pressure value to be reported, in A/D units when Channel Enable is set to Simulation Mode. Valid range: -3.40282E+38 through 3.40282E+38.
Channel Value Format	32-bit Floating-point	Read only: 32-bit floating-point
High Scale Value (Eng Units)	1024.0	The upper value, in engineering units, used for scaling. Valid range: -3.40282E+38 through 3.40282E+38 engineering units. Note: Scaling is disabled if High Scale Eng. Units equals High Scale A/D Units and Low Scale Eng. Units equals Low Scale A/D Units.
Low Scale Value (Eng Units)	0.0	The lower value, in engineering units, used for scaling. Valid range: -3.40282E+38 through 3.40282E+38 engineering units. The Low Scale Value (Eng Units) parameter cannot be equal to the High Scale Value (Eng Units) parameter. It can be higher than the High Scale Value (Eng Units) parameter for reversed or inverse scaling. Default is Low A/D Limit of selected range type. Must be lower than the High Scale Value.
High Scale Value (A/D Units)	1024.0	The upper value, in A/D Units, used for scaling. Valid range: 0 through 65535. Note: Scaling is disabled if High Scale Eng. Units equals High Scale A/D Units and Low Scale Eng. Units equals Low Scale A/D Units.
Low Scale Value (A/D Units)	0.0	The upper value, in A/D Units, used for scaling. Valid range: 0 through 65535.
High Alarm (Eng Units)	1024.0	When the channel input value reaches or exceeds this value, a High Alarm is triggered. Valid range: Within High Scale Value–Low Scale Value (Eng Units) range. Must be greater than Low Alarm. Note: A channel uses this value only when High Alarm Enable is set to Enabled under Diagnostic Reporting Enable and/or Fault Reporting Enable.

Parameter	Default	Description
Low Alarm (Eng Units)	1.0	When the channel input value reaches or goes lower than this value, a Low Alarm is triggered. Valid range: Within High Scale Value to Low Scale Value (Eng Units) range. Must be less than High Alarm. Note: A channel uses this value only when Low Alarm Enable is set to Enabled under Diagnostic Reporting Enable and/or Fault Reporting Enable.
High Alarm Deadband (Eng Units)	1.0	A range in Engineering Units below the alarm condition where the alarm status bit remains set even after the alarm condition no longer exists. For the alarm status to clear, the channel input must fall outside the deadband range. Valid range: 0 through the difference between High Scale Value and Low Scale Value (Eng Units).
Low Alarm Deadband (Eng Units)	1.0	A range in Engineering Units above the alarm condition where the alarm status bit remains set even after the alarm condition goes away. For the alarm status to clear, the channel input must fall outside the deadband range. Valid range: 0 through the difference between High Scale Value and Low Scale Value (Eng Units).
User Offset (Eng Units)	0.0	Engineering Units offset to change the base of the input channel. This value is added to the scaled value on the channel prior to alarm checking. Valid range: -3.40282E+38 through 3.40282E+38 (Eng Units).
Diagnostic Reporting Enable If Diagnostic Reporting is enabled, the additional parameters listed below can be used to enable specific types of alarms.	Disabled	The Diagnostic Reporting Enable, and Fault Reporting Enable configuration parameters can be used to enable different types of responses for individual channel alarms. By default, all responses are disabled on every channel. Any combination of alarm enables can be configured for each channel. Alarm values are applied to the scaled Engineering Units value. If *Diagnostic Reporting* is enabled, Module reports channel faults and enabled alarms in reference memory at the Diagnostic Reference Address configured for that channel. (Diagnostic Reference Length must be greater than 0.) If *Fault Reporting* is enabled, Module logs a fault in the I/O Fault table for each occurrence of a channel fault or an enabled channel alarm.
Fault Reporting Enable If Fault Reporting is enabled, the additional parameters listed below can be used to enable specific types of Faults.	Disabled	
Low Alarm Enable	Disabled	These additional parameters enable or disable individual diagnostics features of a channel. When any of these parameters is enabled, Module uses the associated parameters to perform the enabled feature. For example, if Module detects a loss of circuit communication fault, and Open Wire is enabled for Diagnostic Reporting, Module will set the corresponding bit in the Diagnostic Reference memory for the channel.
High Alarm Enable	Disabled	
Open Wire Enable	Disabled	
New Data Alarm Enable	Disabled	
Error Response Fault	Disabled	
Latched BIT Failure Fault	Disabled	
Latched IIC Failure Fault	Disabled	

Parameter	Default	Description
Latched ICS Failure Fault	Disabled	If any of these parameters is disabled, Module does not react to the associated alarm conditions. For details, refer to the section, *Channel Diagnostic Bit* Definitions.
Sensor Scan Group	1	Associates the input channel with other channels that have been assigned the same value. Determines groups of channels to be scanned each internal sweep. To scan all sensors every sweep, they must be in the same scan group. Valid range: 1 through 15.

16.28.5 Module Status Data: PRS015

Bit offsets are from Module Status Reference Address.

Bit Offset	Bit Flag Name	Description
0	Module OK	Set to 1 when Module is powered up and there are no errors on module Cleared when module has failed or is not present
1–14	Reserved	Reserved
15	Watchdog failure	Set to 1 when watchdog timeout error has occurred
16	RAM failure	Set to 1 when RAM failure has occurred
17	Interface failure	Set to 1 when interface failure has occurred
18–31	Reserved	Reserved

16.28.7 Input Channel Scaling: PRS015

Scaling parameters specify the relationship between the LG1237 reported value (input signal) and the engineering units value.

AL = Low Scale A/D Units
AH = High Scale A/D Units
EL = Low Scale Engineering Units
EH = High Scale Engineering Units
IS = Input Signal (in signal units)

User Scaled value = $$IS \times \frac{EH - EL}{AH - AL} + EL - AL \times \frac{EH - EL}{AH - AL}$$

16.28.8 Channel Diagnostic Reporting: PRS015

Module reports channel diagnostics in the Diagnostic Reference memory area, which is configured on Module Settings tab. Two words (32 bits) are allocated to each channel.

Channel Segments

Channel	Starting Reference Address
0	Diagnostic Reference Address +0
1	Diagnostic Reference Address +2
2	Diagnostic Reference Address +4
3	Diagnostic Reference Address +6
4	Diagnostic Reference Address +8
5	Diagnostic Reference Address +10
6	Diagnostic Reference Address +12
7	Diagnostic Reference Address +14

Channel	Starting Reference Address
8	Diagnostic Reference Address +16
9	Diagnostic Reference Address +18
10	Diagnostic Reference Address +20
11	Diagnostic Reference Address +22
12	Diagnostic Reference Address +24
13	Diagnostic Reference Address +26
14	Diagnostic Reference Address +28

Channel Diagnostic Bit Definitions

Bit offsets are from the start of each channel segment in Diagnostic Reference memory.

Bit Offset	Bit Flag Name	Description
0	Low Alarm fault	Set to 1 when Low Alarm is detected. Cleared when Low Alarm off or detection is disabled.
1	High Alarm fault	Set to 1 when High Alarm is detected. Cleared when High Alarm off or detection is disabled.
2–3	Reserved	Used by other analog modules
4	Loss of circuit communication (Open Wire)	Set to 1 if the LG1237 fails to respond to the most recent attempt to read pressure. If any of the transducer fault bit (28, 29 or 30) is set for this channel, this bit will also be set. Cleared when the CPU completes an I/O scan.
5–22	Reserved	Reserved
23	New Data	Set on every successful reading of pressure from the LG1237. Cleared when the CPU completes an I/O scan. This flag allows the application program to detect when new values are available to process.
24	Error response fault	Set when the most recent Response Status flags (bits 25–27) sent from the LG1237 indicate an error.

Bit Offset	Bit Flag Name	Description
25–27	Response Status bit 0	Reserved
28	Latched Bit Failure fault	Set when LG1237 BIT failure is detected. The PRS015 reads this bit from the enabled channel on configured download and after a reset command is issued. Cleared when the CPU completes an I/O scan.
29	Latched IIC Failure fault	Set when LG1237 IIC (invalid input conditions) failure is detected. The PRS015 reads this bit from the enabled channel on configured download and after a reset command is issued. Cleared when the CPU completes an I/O scan.
30	Latched ICS Failure fault	Set when LG1237 ICS failure is detected. The PRS015 reads this bit from the enabled channel on configured download and after a reset command is issued. Cleared when the CPU completes an I/O scan.
31	Reserved	Reserved for future fault

16.28.9 Command Data: PRS015

The application logic uses the Command Data memory areas defined in the PRS015 configuration profile of Module to send commands to LG1237 transducers and receive the responses from the transducers through the serial port.

The application logic issues a command to the LG1237 by setting the value of the Command field in the Command Output data.

When Module is processing a command, the Command Response field contains the *Processing Command* value.

To issue another command, the application must set the Command field to *No Command* and wait for the *No Command Processing* response.

Command Output Data

The Command Output data consists of six words, starting at the Command Output Data Reference Address.

Byte Offsets	Field Name	Command Values
0–3	Command	0x0000 0x0000 No Command 0x0000 0x0001 RESET All other values are reserved.
4–7	Address	Specifies the LG1237 channel to be accessed by the RESET command. Can be changed by the application logic in RUN mode Bits 0–3 Address (0–15 valid; no error checking)
8–23	Reserved	Reserved

Reset Command

The Reset command addresses the LG1237 channel defined in the Address field. No errors are generated for this command.

To reset all LG1237 transducers, issue the Reset command to the global address, 15.

Command Input Data

When the LG1237 receives a command from the Pressure Transducer module, it returns a command response, which is written to the Command Input Data Reference memory, starting at the Command Input Data Reference Address.

Byte Offsets	Field Name	Response Values
0–3	Command Response	0x0000 0x0000 (0 dec) No Command Processing† 0x0000 0x0001 Processing Command† 0x0000 0x0002 Command Complete† 0x1111 0x1111 (-1 dec) Response not received prior to time out 0x1111 0x1110 Response error: Parity, Address or Response code 0x1111 0x1101 Detected BIT (Built In Test) Failure 0x1111 0x1100 Detected IIC (Invalid Input Conditions) 0x1111 0x0111 Command Order Error†
4–23	Reserved	Reserved

16.28.10 Wiring: PRS015

Serial Ports

This port is a standard RJ-45 female connector with the following pin assignments.

Figure 434: RJ-45 Pinout PRS015

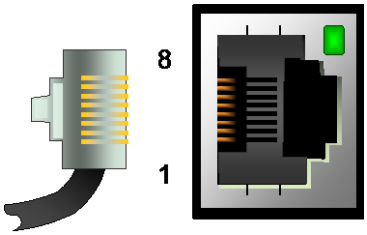

RJ-45 Pin	RS-485/422 Four-Wire Pinouts
8	GND
7	Termination 2
6	Rx- (Input)
5	GND
4	
3	Rx+ (Input)
2	Tx- (Output)
1	Tx+ (Output)

Note: There is no shield or frame ground pin on the port connector. To reduce susceptibility to noise, the RX+ and RX- signals should be wired to the same twisted pair. Likewise, the TX+ and TX- signals should be wired to a single twisted pair.

Termination

By default, each port is set for no termination. Termination is needed if Module is the first or last device on an RS-485 network, even if there is only one other device on the network. Termination can be provided using either an external resistor as displayed in the following figure or the 120Ω termination resistor built into the port. If line termination other than 120Ω is required, an appropriate external resistor must be supplied.

User-Supplied Termination for RS-485

Figure 435: Externally-Mounted Terminating Resistor

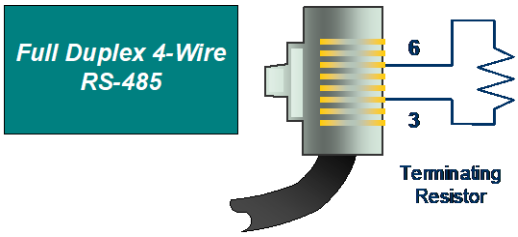

Built-in Termination for RS-485

Termination using the built-in 120Ω resistor can be provided by setting the appropriate RS-485 termination jumper OR by installing shorting jumpers on the RS-485 cable connector that attaches to the serial port.

To set 120 Ω termination internally

1. Remove the faceplate of Module by pressing in on the side tabs and pulling the faceplate away from Module.
2. With Module oriented as shown, move *either* the upper or lower jumper

Figure 436: Using the Internal Terminating Resistor PRS015

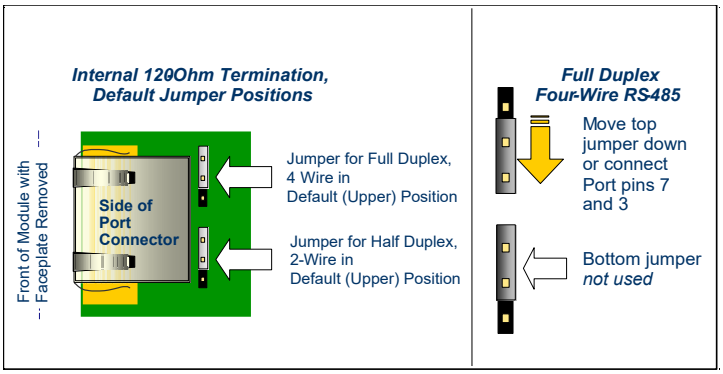

Section 17: Terminal Blocks and Interconnect Cables

This chapter describes the following:

- High-Density Module-Mounted Terminal Blocks (Section 0)
- Terminal Block Quick Connect (TBQC) system (Section 17.2)
  - for RX3i and Series 90-30 20-terminal discrete modules
  - for RX3i and Series 90-30 32-point discrete modules with dual D-Connectors
  - for RX3i and Series 90-30 Modules with 36 terminals
- Prefabricated interconnect cable suitable for connecting the I/O Modules to the Remote TBQC terminal blocks
- How to build a custom interconnect cable.
- Terminal Block Selection Options

Unless otherwise stated, RX3i I/O modules are provided with a suitable terminal block. Refer to the section in this manual which discusses the specific I/O module of interest.

In the case of high-density discrete I/O modules, the user has some terminal block selection options, so terminal blocks are purchased separately. The user may select:

- A module-mounted terminal block, in which case all field wiring will be directly attached to the I/O module
- An interposing terminal strip with an interconnect cable, allowing all field wiring to be landed on the interposing terminal strip, which is then attached to the I/O module via a pre-fabricated or custom cable. This allows for quick connection of the I/O module to previously wired terminal strips. It also provides a solution where wiring directly to the I/O module is not possible due to space limitations or due to the rigidity or thickness of the wire bundle.

17.1 High-Density Module-Mounted Terminal Blocks

Terminal Block Type	Catalog Number
Box-style Terminal Block, 36 Terminals	IC694TBB032
Spring-style Terminal Block, 36 Terminals	IC694TBS032
Extended Box-style Terminal Block, 36 Terminals	IC694TBB132
Extended Spring-style Terminal Block, 36 Terminals	IC694TBS132

17.1.1 Terminal Blocks for High-Density RX3i Modules

Extended High-Density vs. High-Density Terminal Blocks

Extended High-Density Terminal Blocks IC694TBB132 and IC694TBS132 are functionally identical to High-Density Terminal Blocks IC694TBB032 and IC694TBS032. Both attach directly to the I/O module. The Extended High-Density Terminal Blocks have an outer cover that is approximately 13 mm (½ in) deeper. This is to accommodate wires with thicker insulation, such as wires typically used with AC I/O modules.

Figure 437: Additional Depth due to Extended High-Density Terminal Blocks

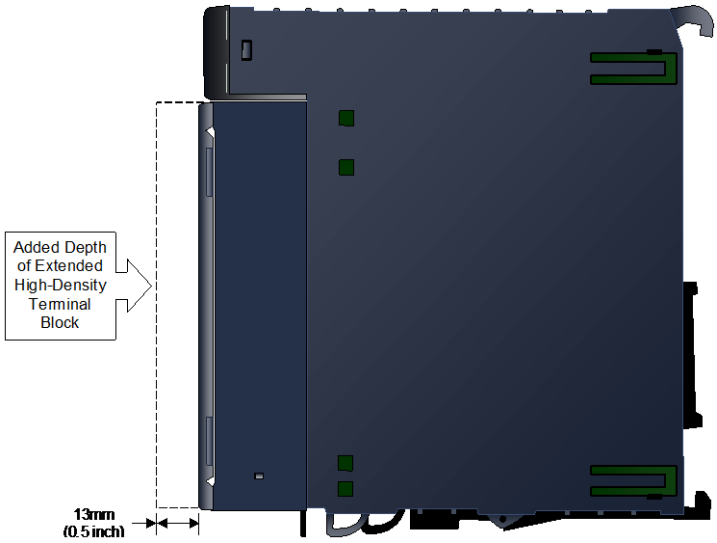

Figure 438 compares the space for wiring on a High-Density Terminal Block (left) and an Extended High-Density Terminal Block (right), seen from the bottom of Module.

Figure 438: Depth Comparison: High-Density vs Extended High-Density Terminal Block

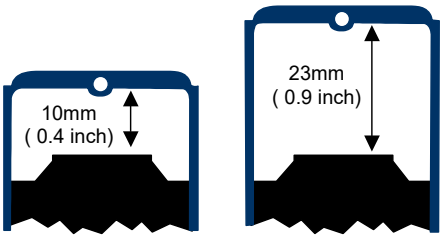

IC694TBB032 and TBB132 Box-Style Terminal Blocks, 36 Terminals

Figure 439: 36-Terminal Box-Style Terminal Block

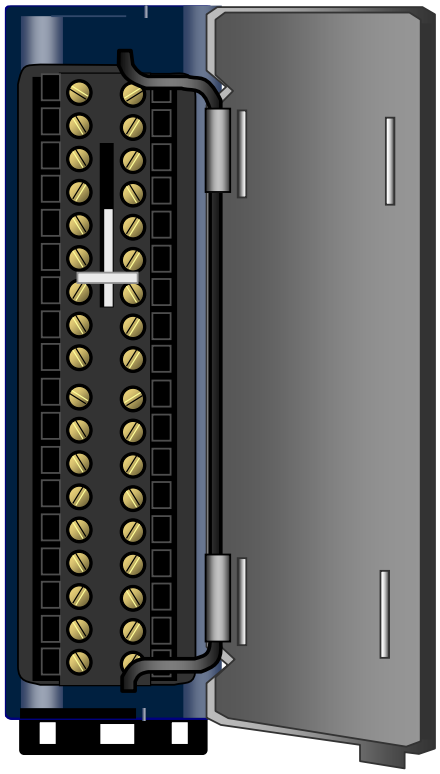

Box-Style Terminal Blocks, IC694TBB032 and IC694TBB132, are used with high-density PACSystems RX3i modules and equivalent Series 90-30 PLC modules. These terminal blocks provide 36 screw terminals for field wiring to Module.

Terminal Blocks IC694TBB032 and TBB132 are functionally identical. Terminal Block IC694TBB032 comes with a standard-depth outer cover. When installed, it is the same depth as most other PACSystems and Series 90-30 PLC modules.

Extended Terminal Block IC694TBB132 comes with an outer cover that is approximately 13 mm (½ in) deeper than Terminal Block IC694TBB032, to accommodate wires with thicker insulation, such as that typically used with AC I/O modules.

Specifications: TBB032 and TBB132

Specification	Description
Torque	0.79 Nm (7 in-lb.)
Wire strip length	7.87 mm (0.310 in)
Wire gauges supported	#14-26 AWG (solid or stranded)

Connecting Field Wiring to a Box-Style High-Density Terminal Block

The bottom of the terminal block can be used as a gauge for the wire strip length, as displayed in Figure 440. The stripped wire must be fully inserted into the terminal block so that the insulation meets the stop position inside the terminal, and the end of the wire is bent. Tightening the terminal screw raises the wire and clamps it in place.

Figure 440: Wire Preparation and Insertion into Box-Style Terminal Block

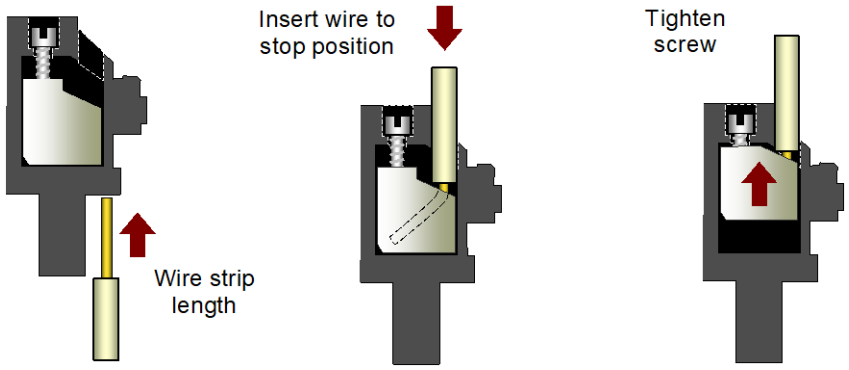

IC694TBS032 and TBS132 Spring-Style Terminal Blocks, 36 Terminals

Figure 441: 36-Terminal Spring-Style Terminal Block

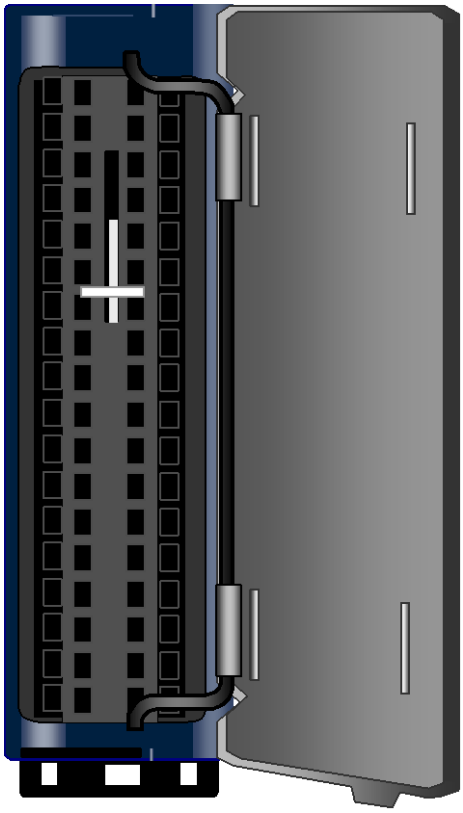

Spring-Style Terminal Blocks, IC694TBS032 and IC694TBS132, are used with High-Density PACSystems RX3i modules and equivalent Series 90-30 PLC modules. These terminal blocks provide 36 spring style terminals for field wiring to Module.

Terminal Blocks IC694TBS032 and TBS132 are functionally identical. Terminal Block IC694TBS032 comes with a standard-depth outer cover. When installed, it is the same depth as most other PACSystems and Series 90-30 PLC modules.

Extended Terminal Block IC694TBS132 comes with an outer cover that is approximately ½ inch (13mm) deeper than Terminal Block IC694TBS032, to accommodate wires with thicker insulation, such as that typically used with AC I/O modules.

Specifications: TBS032 and TBS132

Specifications	Description
Wire strip length	7.87 mm (0.310 in)
Wire gauges supported	#14-28 AWG (solid or stranded)

17.1.3 Installing and Removing High-Density Terminal Blocks

This section has special installation instructions for High-Density Terminal Blocks. Refer to Chapter 2 for general installation information.

⚠ WARNING

Field power must be turned off when installing or removing a Terminal Block assembly.

Installing or Removing the Terminal Block Assembly of a Module

To install or remove the terminal block module assembly

1. Install the small catalog number label (for example: “MDL240”) supplied with Module in the slot on the top of the Terminal Block.
2. Complete Module wiring and secure the wire bundles to the tie downs on the bottom of the Terminal Block.

Inserting a Terminal Block in its Cover

Figure 442: Inserting Terminal Block into its Cover

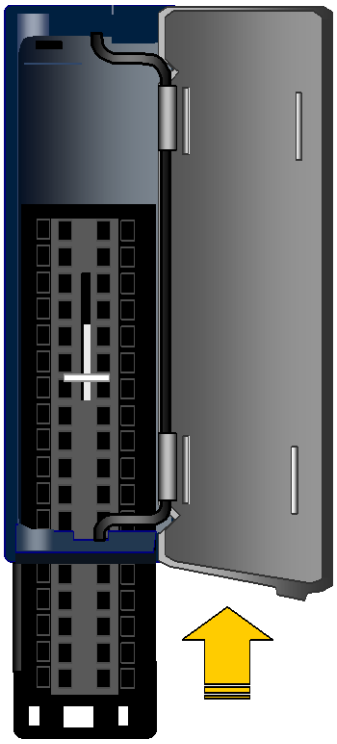

To insert a terminal block in the cover

1. Align the top of the Terminal Block with the bottom of the cover, making sure that the notches in the Terminal Block match up with the grooves in the cover.
2. Slide the Terminal Block upward until it clicks into place.

Installing a High-Density Terminal Block Assembly

To install a high-density terminal block assembly

1. Press the terminal block assembly straight toward Module until it is partially seated.
2. Open the door on the front of the terminal block and push the latch (refer to below) up very firmly until it reaches the top of the slot and clicks into place.
3. Check to be sure the terminal block is fully seated.

Figure 443: Installing a High-Density Terminal Block

Removing a High-Density Terminal Block from Module

Figure 444: Removing a High-Density Terminal Block

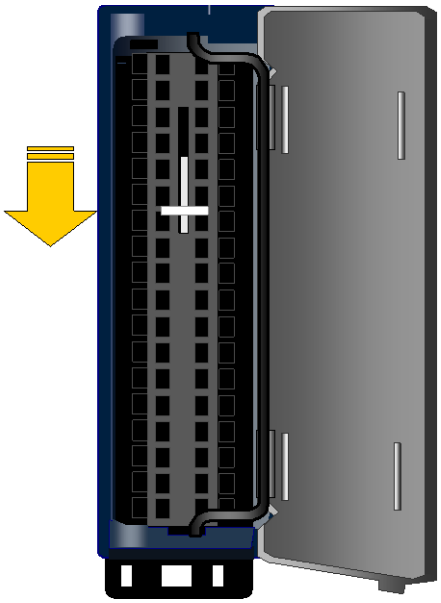

To install a high-density terminal block assembly

1. Open the terminal block door.
2. Push the white plastic latch (Figure 444, center) down very firmly until the terminal block is released.
3. Pull the terminal block straight out and away from Module until the contacts have separated.

Removing a Terminal Block from its Cover

To remove a Terminal Block from its cover

1. Grasp the sides of the Terminal Block cover.
2. Pull down on the bottom of the Terminal Block.

17.2 Terminal Block Quick Connect (TBQC) System

The optional Terminal Block Quick Connect (TBQC) system allows the listed discrete and analog I/O modules to be quickly connected to external TBQC terminal blocks via an interconnecting cable. The TBQC system significantly reduces wiring costs by reducing wiring time and eliminating wiring errors. The TBQC terminal blocks also have integrated test points to simplify wiring troubleshooting.

There are three distinct TBQC product offerings (not interchangeable):

1. The Low-Density TBQC products (IC693ACC329 -333) provide 20-terminal remote connector blocks. They are compatible primarily with Low-Density Discrete I/O Modules that come equipped with a 20-terminal connector header. They connect to the I/O module via an unshielded cable. The original 20-terminal connector may be retained on the I/O module, or may be replaced with a faceplate containing a compatible D-connector (catalog number IC693ACC334). Using the D-connector faceplate greatly simplifies the wiring effort.

2. IC693ACC337 is a variant of (1) above. It provides a 24-terminal remote connector and a pair of interconnecting cables that are compatible with those 32-point discrete I/O modules that come equipped with a pair of D-connectors. They connect to the I/O module via a pair of unshielded cables.

3. The high-density remote terminal block (IC694RTB032) is compatible with IC694TBC032, which is a 36-terminal module-mounted terminal block. They are interconnected via a shielded cable. This allows it to support analog modules as well as discrete.

17.2.1 Low-Density TBQC System Overview

Figure 445: Low-Density Terminal Block Quick Connect System

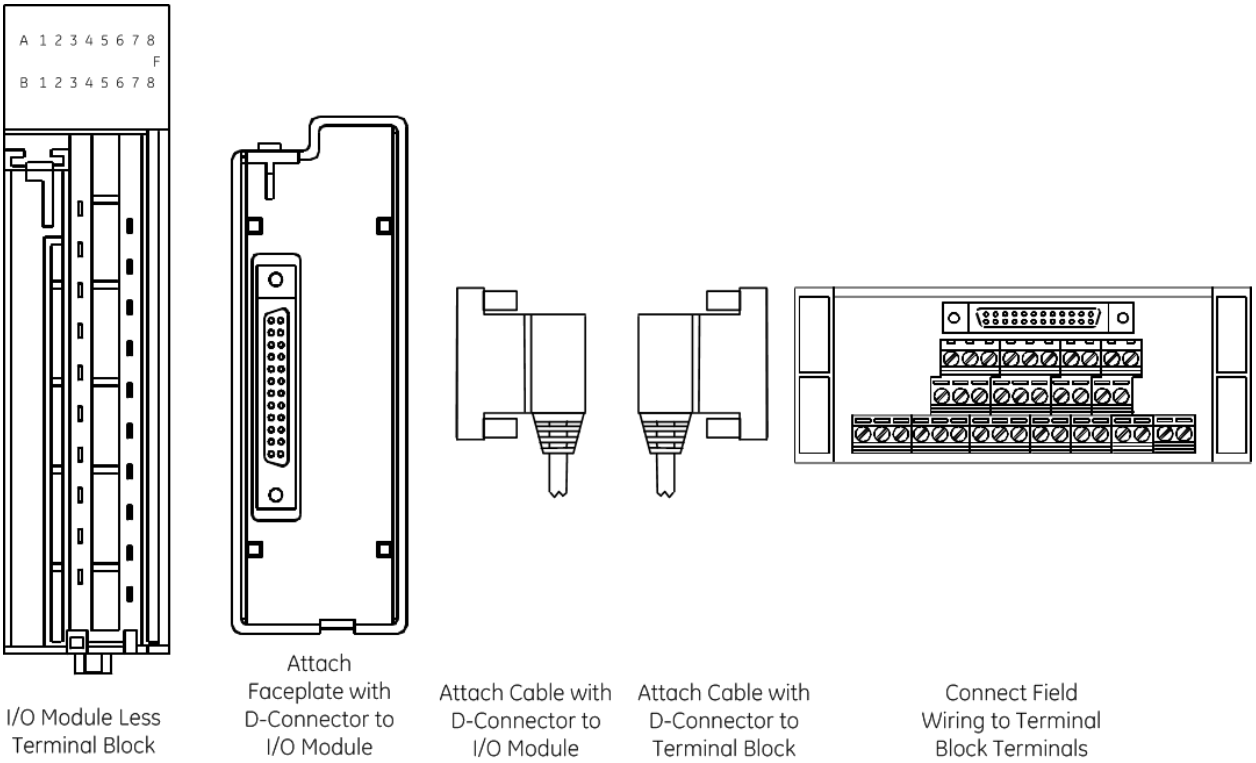

The TBQC terminal block is snapped onto a standard DIN-rail. Then a pre-fabricated cable is connected between the D-connector of the terminal block and the connector of the I/O module. An I/O module normally equipped with terminals needs to be converted to a D-connector type using an adapter faceplate (IC693ACC334) shown above. Alternatively, the interconnecting cable may have wires at the I/O module end and a D-connector at the TBQC end.

Using the pre-fabricated cables (refer to Section 17.2.1, *Components for Low-Density, Unshielded 20-/24-point TBQC),* the 24-conductor cables are wired straight through from the I/O Faceplate to the TBQC terminal block, ensuring that Terminal 1 of the I/O Module maps to Terminal 1 of the TBQC Terminal Block, and Terminal 20 maps to Terminal 20, etc.

The IC693ACC series of terminal blocks have three rows of terminals, arranged in three levels, as displayed in the following figures. These

terminal blocks feature an easy to use captive-screw, rising cage type connection system.

The IC693ACC TBQC system is not recommended for use with Analog modules because it does not meet the shielding recommendations for Analog module connections.

Components for Low-Density, Unshielded 20-/24-point TBQC

Part Number	Description	Compatibility
IC693ACC334	Low-Density, 20-point terminal block with 24-pin D-connector.	IC693MDLxxx / IC694MDLxxx compatible with 20-point terminal block.
IC693ACC329[103]	Low-Density, 20-point terminal block with 24-pin D-connector.	IC69xMDL645, IC69xMDL646, IC69xMDL240, IC69xMDL740, IC69xMDL741, IC69xMDL742
IC693ACC332	Low-Density, 20-point terminal block with 24-pin D-connector.	IC69xMDL940 only
IC693ACC333	Low-Density, 20-point terminal block with 24-pin D-connector.	IC69xMDL340 only
IC693ACC337	Medium density, 24-point terminal block with 24-pin D-connector.	IC69xMDL654, IC69xMDL655, IC69xMDL752, IC69xMDL753
IC693CBL329	Unshielded 1.0-meter cable with 24-pin D-connector termination on both ends.	IC693ACC337 (left side)
IC693CBL330	Unshielded 1.0-meter cable with 24-pin D-connector termination on both ends.	IC693ACC334 and IC693ACC329 & IC693ACC337 (right side)
IC693CBL331	Unshielded 2.0-meter cable with 24-pin D-connector termination on both ends.	IC693ACC337 (left side)
IC693CBL332	Unshielded 2.0-meter cable with 24-pin D-connector termination on both ends.	IC693ACC334 and IC693ACC329 & IC693ACC337 (right side)
IC693CBL333	Unshielded 0.5-meter cable with 24-pin D-connector termination on both ends.	IC693ACC337 (left side)
IC693CBL334	Unshielded 0.5-meter cable with 24-pin D-connector termination on both ends.	IC693ACC334 and IC693ACC329 & IC693ACC337 (right side)
IC693CBL327	Unshielded 3.0-meter cable with 24-pin D-connector termination on one end.	IC694MDL752, IC694MDL753
IC693CBL328	Unshielded 3.0-meter cable with 24-pin D-connector termination on one end.	IC694MDL752, IC694MDL753 IC693ACC334

[103] *This Terminal Block may be used with most I/O modules that have up to 16 I/O points. It cannot be used with 32-point modules. Jumpers may have to be added at the terminal block; for details of required wiring connections, refer to individual module specifications.*

Typical IC693ACC Terminal Block

Figure 446: IC693ACC Terminal Block

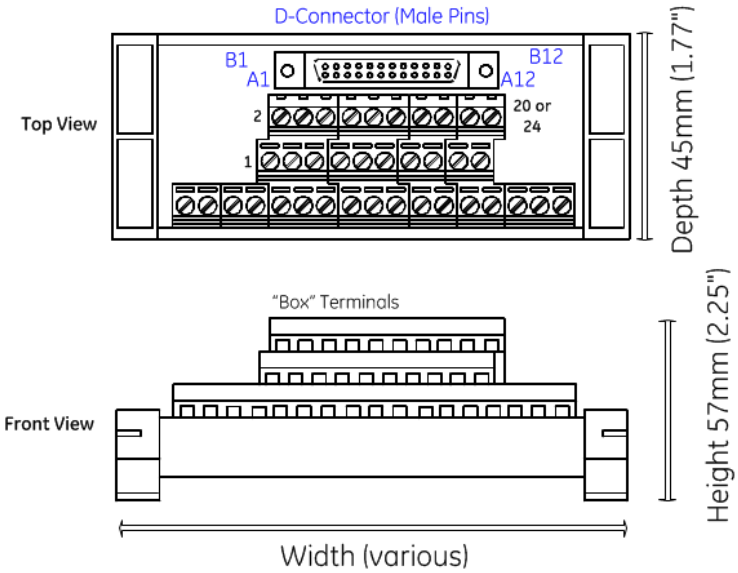

IC693ACC329 TBQC Terminal Block

Figure 447: IC693ACC329 TBQC Terminal Block

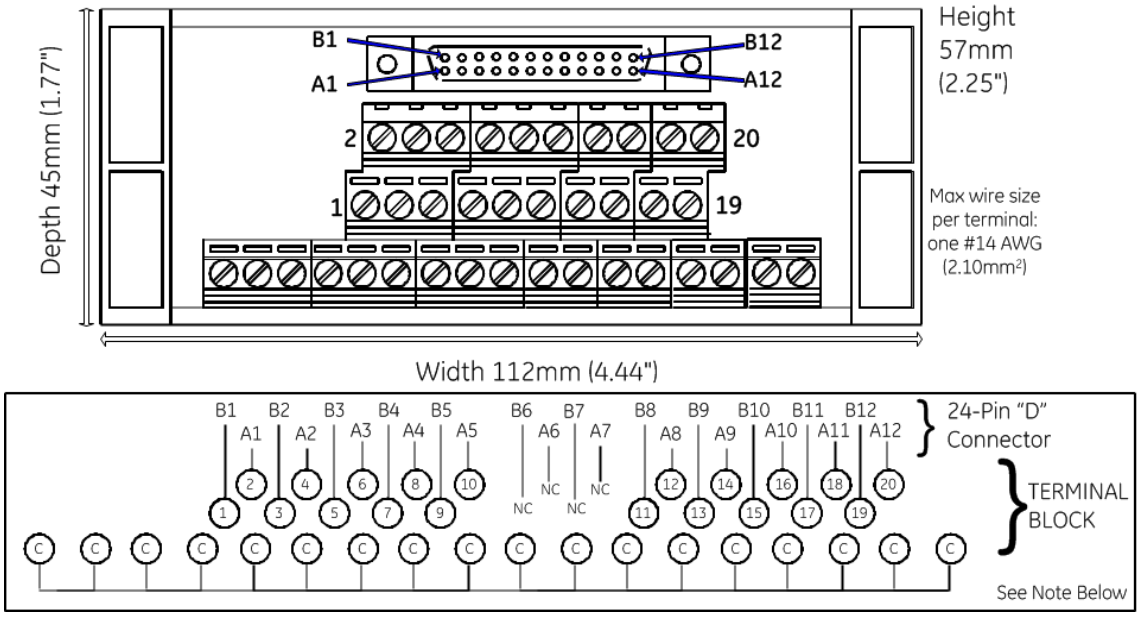

Note: The common row terminals (labeled with the letter C) are provided for wiring convenience. Their use is optional. They are electrically isolated from the

numbered terminals. You may use them as is, or jumper them to a numbered terminal.

Connecting

Refer to cable selection in Section 17.2.1, *Components for Low-Density, Unshielded 20-/24-point TBQC*.

Mounting

These terminal blocks are mounted on a standard, user-supplied 35 mm DIN-rail.

IC693ACC332 TBQC Terminal Block

Figure 448: IC693ACC332 TBQC Terminal Block

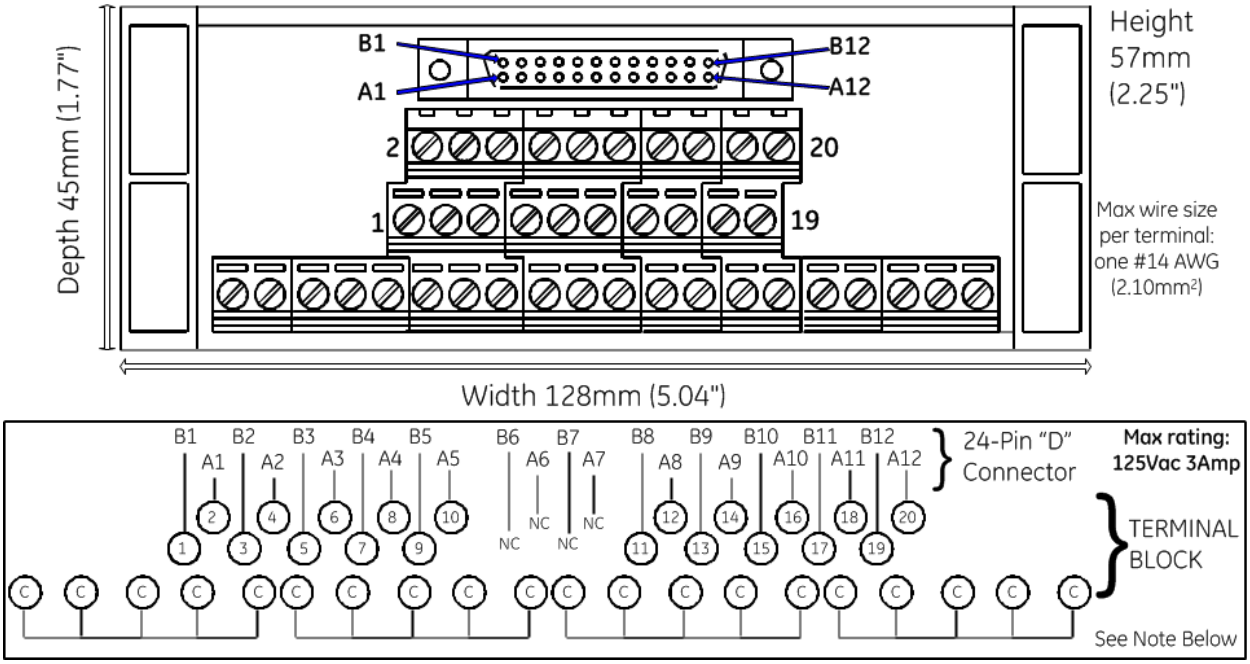

Note: The common row terminals (labeled with the letter C) are provided for wiring convenience. Their use is optional. They are electrically isolated from the numbered terminals. You may use them as is, or jumper them to a numbered terminal.

Connecting

Refer to cable selection in Section 17.2.1, Components for Low-Density, Unshielded 20-/24-point TBQC.

Mounting

These terminal blocks are mounted on a standard, user-supplied 35 mm DIN-rail.

IC693ACC333 TBQC Terminal Block

Figure 449: IC693ACC333 TBQC Terminal Block

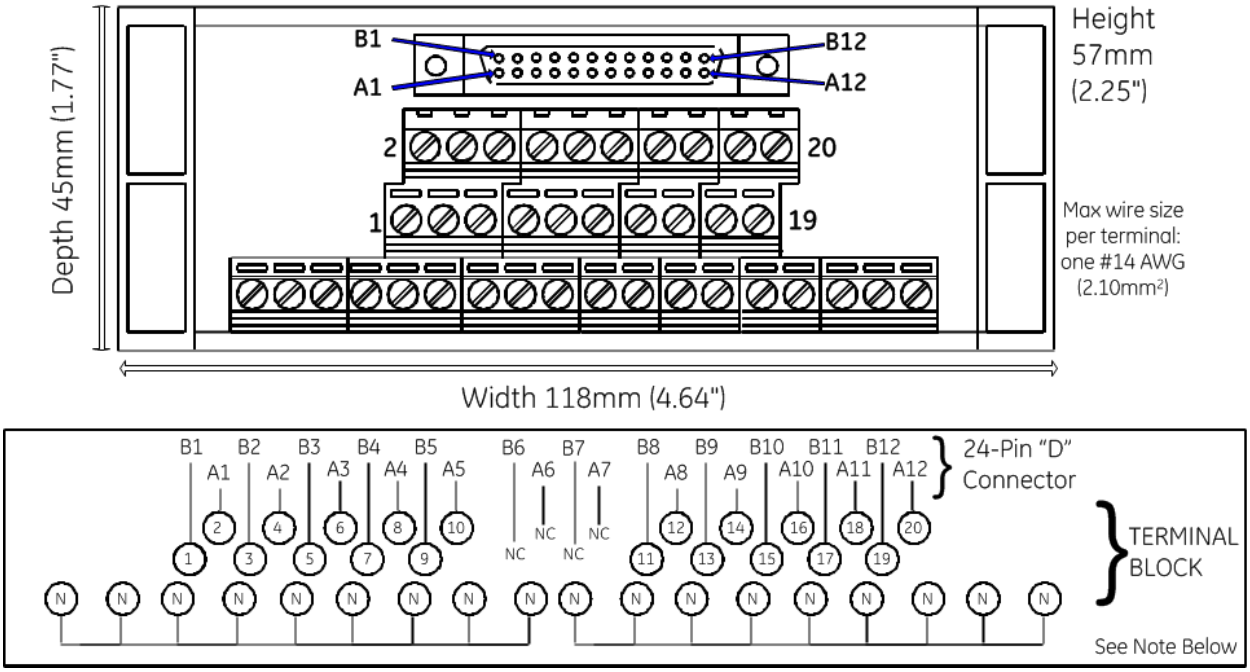

Note: The neutral row terminals (labeled with the letter N) are provided for wiring convenience. Their use is optional. They are electrically isolated from the numbered terminals. You may use them as is, or jumper them to a numbered terminal.

Connecting

Refer to cable selection in Section 17.2.1, Components for Low-Density, Unshielded 20-/24-point TBQC.

Mounting

These terminal blocks are mounted on a standard, user-supplied 35 mm DIN-rail.

I/O Faceplate with D-Connector for 20-Terminal I/O Modules

The I/O Faceplate (catalog number IC693ACC334) may be inserted into the I/O Module header in place of the 20-screw type terminal block. IC693ACC334 provides a 24-pin D-connector, which may be connected to the remote TBQC terminal block via a pre-fabricated cable. This Faceplate replaces the standard 20-screw type terminal board on the listed modules.

Faceplate Connector Pin Orientation and Connection to Module Terminal

Figure 450: Connector Pin Assignments for D-Connector with 20 Terminals

Module Terminal #	Connector Pin #
1	B1
2	A1
3	B2
4	A2
5	B3
6	A3
7	B4
8	A4
9	B5
10	A5
	B6 (NC)[104]
	A6 (NC)[104]
	B7 (NC)[104]
	A7 (NC)[104]
11	B8
12	A8
13	B9
14	A9
15	B10
16	A10
17	B11
18	A11
19	B12

[104] *Note that there are four "No Connect" pins in the D-Connector.*

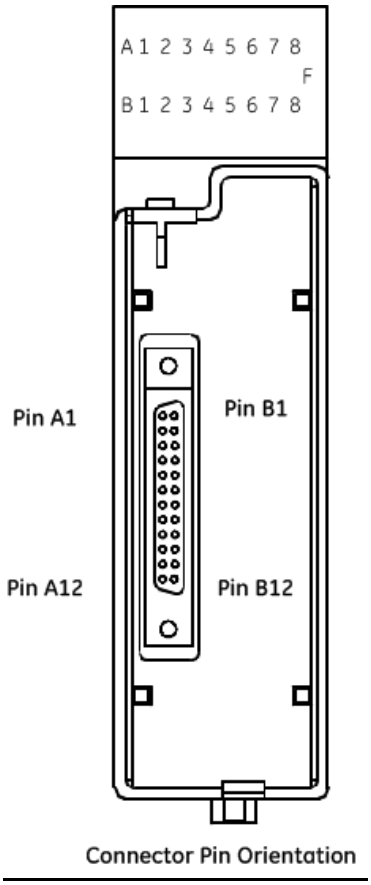
A 1 2 3 4 5 6 7 8
F
B 1 2 3 4 5 6 7 8
Pin A1
Pin B1
Pin A12
Pin B12
Connector Pin Orientation

20	A12

Installation of I/O Faceplate IC693ACC334

To install the IC693ACC334 I/O faceplate

1. Remove 20-pin terminal assembly from module

Figure 451: IC693ACC334 I/O Faceplate Installation

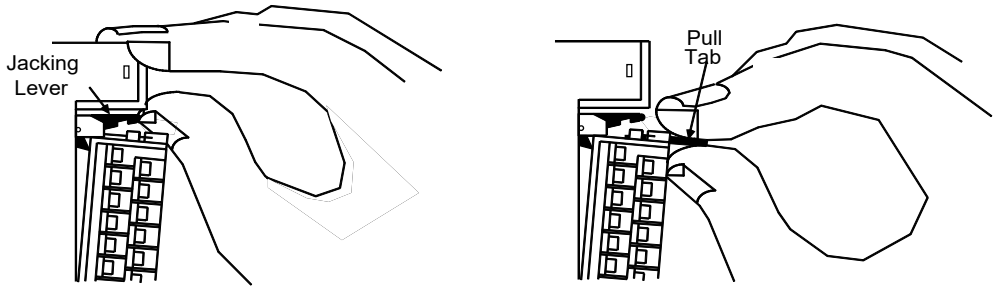

1. Open the plastic terminal board cover. Push up on the jacking lever to release the terminal block.
2. Grasp pull-tab towards you until contacts have separated from module housing and hook has disengaged for full removal.

2. Snap the I/O faceplate assembly on module.

Figure 452: IC693ACC334 I/O Faceplate Snaps into Place

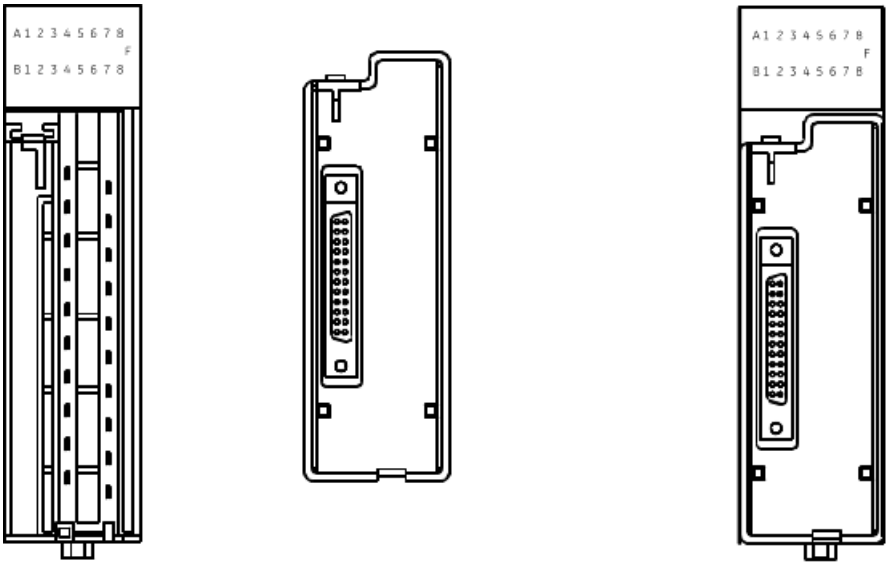

Installing the I/O Faceplate

Module with I/O Faceplate Installed

Install the TBQC terminal block of your choice and run the interconnecting cable between the I/O Faceplate and the D-connector on the TBQC terminal block.

Cable Current Rating for Available Interconnect Cables

Each conductor in the IC693CBL* 24-conductor cables has a current rating of 1.2 A.

If using cables with a 16-point output module with a higher output current rating, your loads must not draw more than 1.2 A. If you have field devices that require more than 1.2 A, do not use a TBQC assembly; use the standard Terminal Board that comes with Module instead.

A current rating of 1.2 A is more than adequate to handle the current requirement of any of the 32-point I/O modules listed earlier.

Interconnect Cable Connector & Construction Information

Cables IC693CBL327 and IC693CBL328 each have a right–angle 24–pin connector (Fujitsu FCN-365S024–AU) on one end and a set of stripped wire ends on the other.

Figure 453: IC693CBL327 and IC693CBL328 Cable Construction

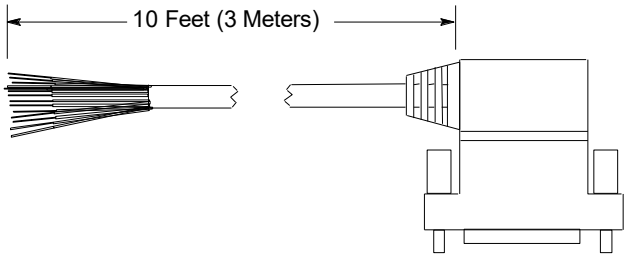

All of the other IC693CBL* cables types have connectors (Fujitsu FCN–365S024–AU) on both ends. These cables are wired pin–to–pin (pin A1 to pin A1, pin A2 to pin A2, and so forth).

Figure 454: Cable Construction for all other IC693CBL∗ Cables

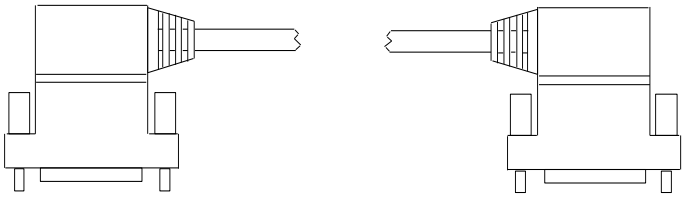

Each pin on these connectors has a current rating of 1.2 A.

Connector Depth

The prefabricated IC693CBL* cables extend 51 mm (2in) out from the face of Modules to which they are connected. The depth of the cabinet that the PLC is mounted in should allow for the 51 mm (2in) depth added by the connector.

Figure 455: Connector Depth for IC693CBL* Cables

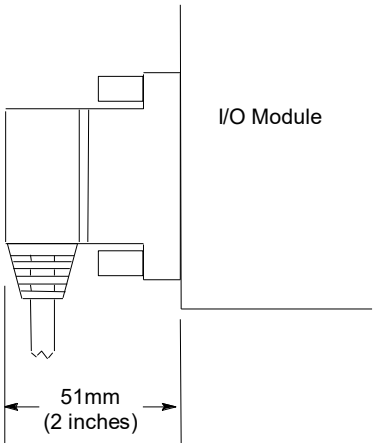

Building Custom Length 24–Conductor D-Connector Cables

Cables similar to IC693ACC* connecting the I/O module to TBQC terminals can be built to length.

Purchase the mating female (socket type) 24–pin connectors. The 24–pin connector kit can be ordered as an accessory kit from Emerson. Catalog numbers for these connectors and their associated parts are listed in the following table.

The list includes catalog numbers for three types of connectors: solder pin, crimp pin, and ribbon cable. Each accessory kit contains enough components (such as D–connectors, backshells, and contact pins) to assemble ten single–ended cables of the type specified for each kit.

Emerson Catalog Number	Vendor Catalog Number	Description
IC693ACC316	FCN–361J024–AU	Solder eyelet receptacle
(Solder Eyelet Type)	FCN–360C024–B	Backshell (for above)
IC693ACC317	FCN–363J024	Crimp wire receptacle
(Crimp Type)	FCN–363J–AU	Crimp pin (for above, 24 needed)
	FCN–360C024–B	Backshell (for above)
IC693ACC318	FCN–367J024–AUF	IDC (ribbon) receptacle, closed cover
(Ribbon or IDC Type)	FCN–367J024–AUH	IDC (ribbon) receptacle, open cover

Additional tools from Fujitsu are required to properly assemble the crimped contact and ribbon cable type connectors. *The solder eyelet connectors (as provided in IC693ACC316) do not require any special tooling.*

Crimped Contact Connectors (as provided in IC693ACC317) require:

Hand Crimping Tool FCN–363T–T005/H
Contact Extraction Tool FCN–360T–T001/H

Ribbon Cable Connectors (as provided in IC693ACC318) require:

Cable Cutter FCN–707T–T001/H
Hand Press FCN–707T–T101/H
Locator Plate FCN–367T–T012/H

These tools must be ordered from an authorized Fujitsu distributor.

Pin connections with color codes are displayed in the following figure. Cables are made of 12 twisted pairs; wire size is #24 AWG (0.22mm^2).

Each pair has a solid color wire and the same color wire with a black tracer.

Pin Number	Pair #	Wire Color Code	Pin Number	Pair #	Wire Color Code
A1	1	BROWN	B1	7	VIOLET
A2	1	BROWN/BLACK	B2	7	VIOLET/BLACK
A3	2	RED	B3	8	WHITE
A4	2	RED/BLACK	B4	8	WHITE/BLACK
A5	3	ORANGE	B5	9	GRAY
A6	3	ORANGE/BLACK	B6	9	GRAY/BLACK
A7	4	YELLOW	B7	10	PINK
A8	4	YELLOW/BLACK	B8	10	PINK/BLACK
A9	5	DARK GREEN	B9	11	LIGHT BLUE
A10	5	DARK GREEN/BLACK	B10	11	LIGHT BLUE/BLACK
A11	6	DARK BLUE	B11	12	LIGHT GREEN
A12	6	DARK BLUE/BLACK	B12	12	LIGHT GREEN/BLACK

Figure 456: D-Connector Pinout

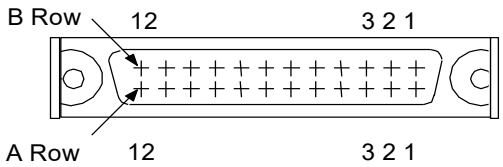

Connector Depth for Custom Built Cables

If custom-built cables use a straight connector, as indicated above, they will require more space in front of the PLC than the prefabricated cables (refer to Section 17.2.1, *Components for Low-Density, Unshielded 20-/24-point TBQC*), which use right–angle connectors. The depth of the cabinet that the PLC is mounted in should allow for the depth added by the selected connector.

Figure 457: Allowance for Extra Depth using Straight-On Connectors

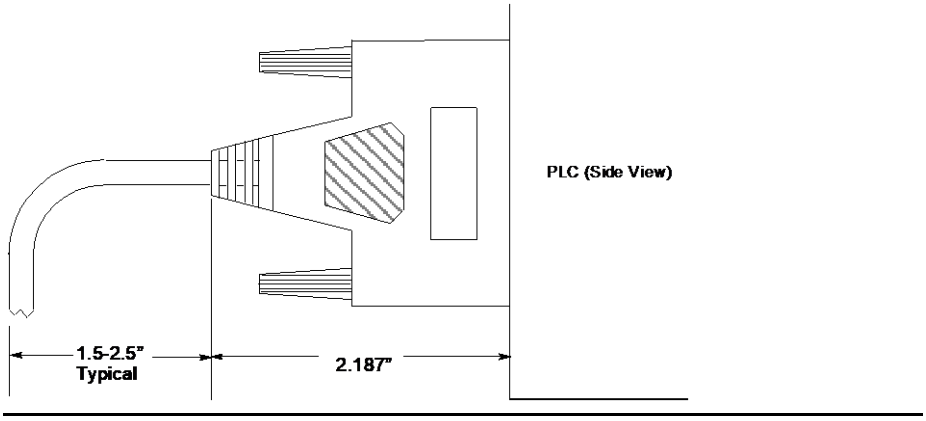
PLC (Side View)
1.5-2.5"
Typical
2.187"

17.2.3 Low-Density TBQC System Variant for 32-Point I/O Modules with Dual D-Connectors

IC693ACC337 provides 24 terminals (versus 20). It is designed for use with those 32-point discrete modules that come equipped with dual D-connectors. This TBQC configuration uses a mated pair of cables (one right-egress and one left-egress) in order to connect the dual D-connectors on the I/O Module to a pair of IC693ACC337 terminal blocks.

The compatible cables connect Pin 1 of the TBQC D-connector to Pin 1 of the corresponding D-connector on the I/O module, and Pin 24 to Pin 24, and such.

Figure 458: IC693ACC337 Terminal Block Top and Front Views

IC693ACC337 TBQC Terminal Block

Figure 459: IC693ACC337 TBQC Terminal Block

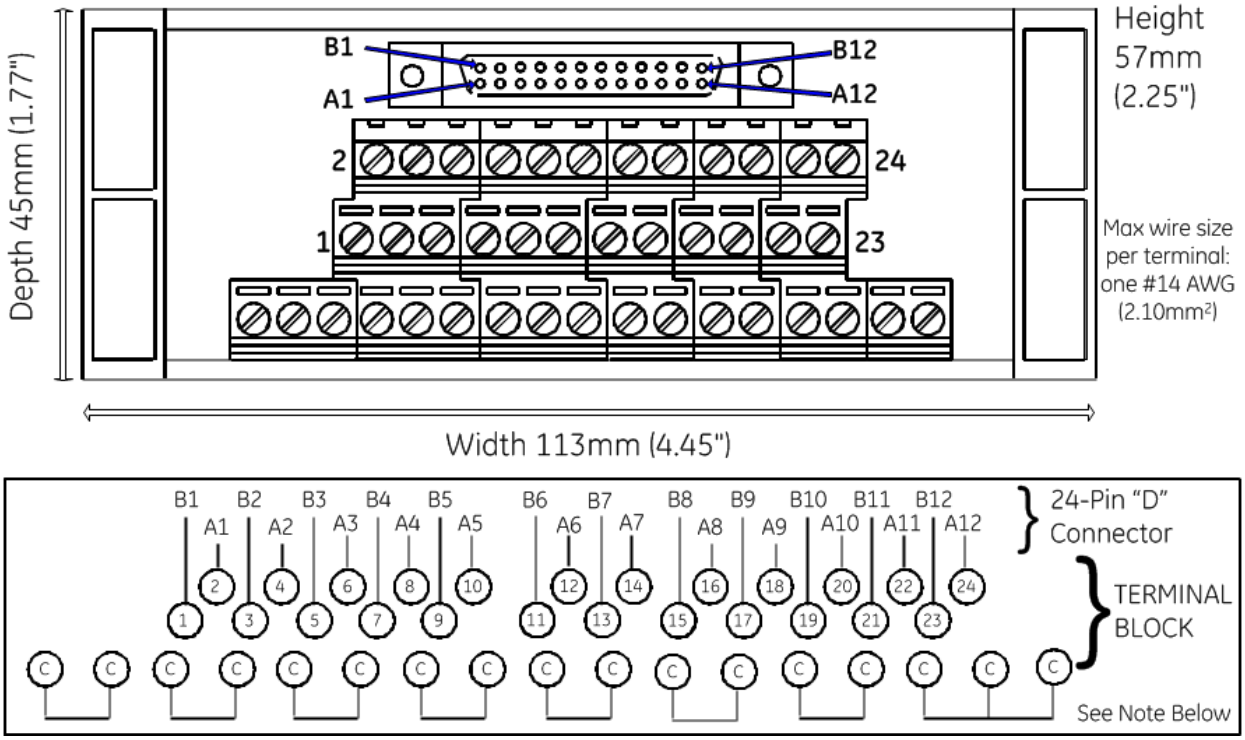

Note: The common row terminals (labeled with the letter C) are provided for wiring convenience. Their use is optional. They are electrically isolated from the numbered terminals. You may use them as is, or jumper them to a numbered terminal.

Connecting

Refer to Section 17.2.1, *Components for Low-Density, Unshielded 20-/24-point TBQC*for cable selection. Remember that for interfacing with a 32-point module with dual D-connectors, it will be necessary to pick a left-side cable and a right-side cable.

Mounting

These terminal blocks are mounted on a standard, user-supplied 35 mm DIN-rail.

Connecting TBQC Components to 32-Point Modules

Figure 460: Pinout Assignments on Dual D-Connector Modules

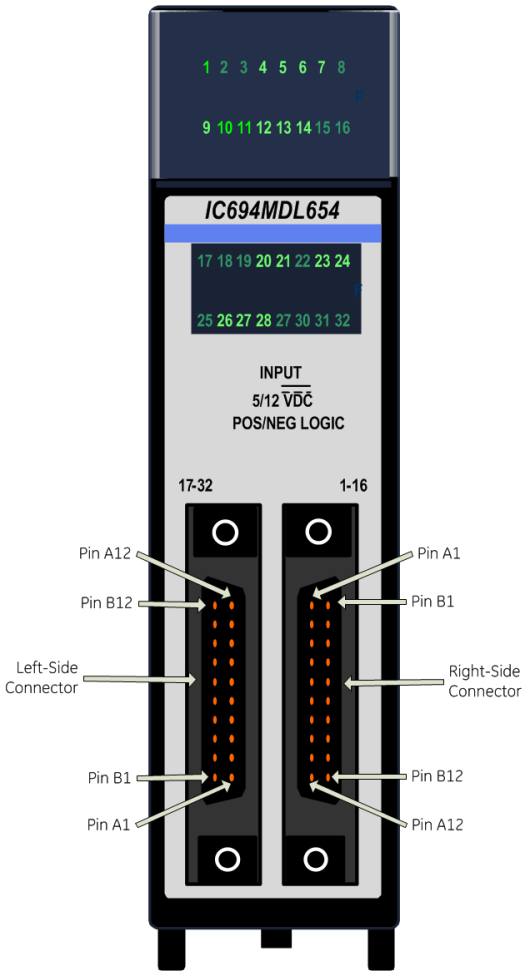

Those 32-point modules equipped with a pair of 24-pin D-connectors on their faceplate may be used with TBQC terminal block IC693ACC337. They do not require a substitute faceplate as was described for the 20-terminal modules.

Since each 32-point I/O module provides two 24-pin D-connectors, they will each require two cables and two IC693ACC337 TBQC terminal blocks. Additionally, since the two connectors on the I/O module are oriented differently (refer to figure below), the egress for each of the cables is different. Emerson supplies “right side” and “left side” cables to simplify installation. Refer to Section 17.2.1, *Components for Low-Density, Unshielded 20-/24-point TBQC* for cable selection.

After installation, cables can be secured to the two tie-downs on the bottom of Module.

Note: These terminal blocks do not work with 32-point I/O modules that have 50-pin connectors.

17.2.4 High-Density TBQC System Overview

The High-Density Compact Remote Terminal Base IC694RTB032 connects to the I/O module faceplate IC694TBC032 via a shielded cable IC694CBL* (refer to the section, *Components for High-Density, Shielded 36-TBQC*) and supports both analog and discrete I/O modules, as displayed in the following table.

Figure 461: High-Density TBQC System Overview

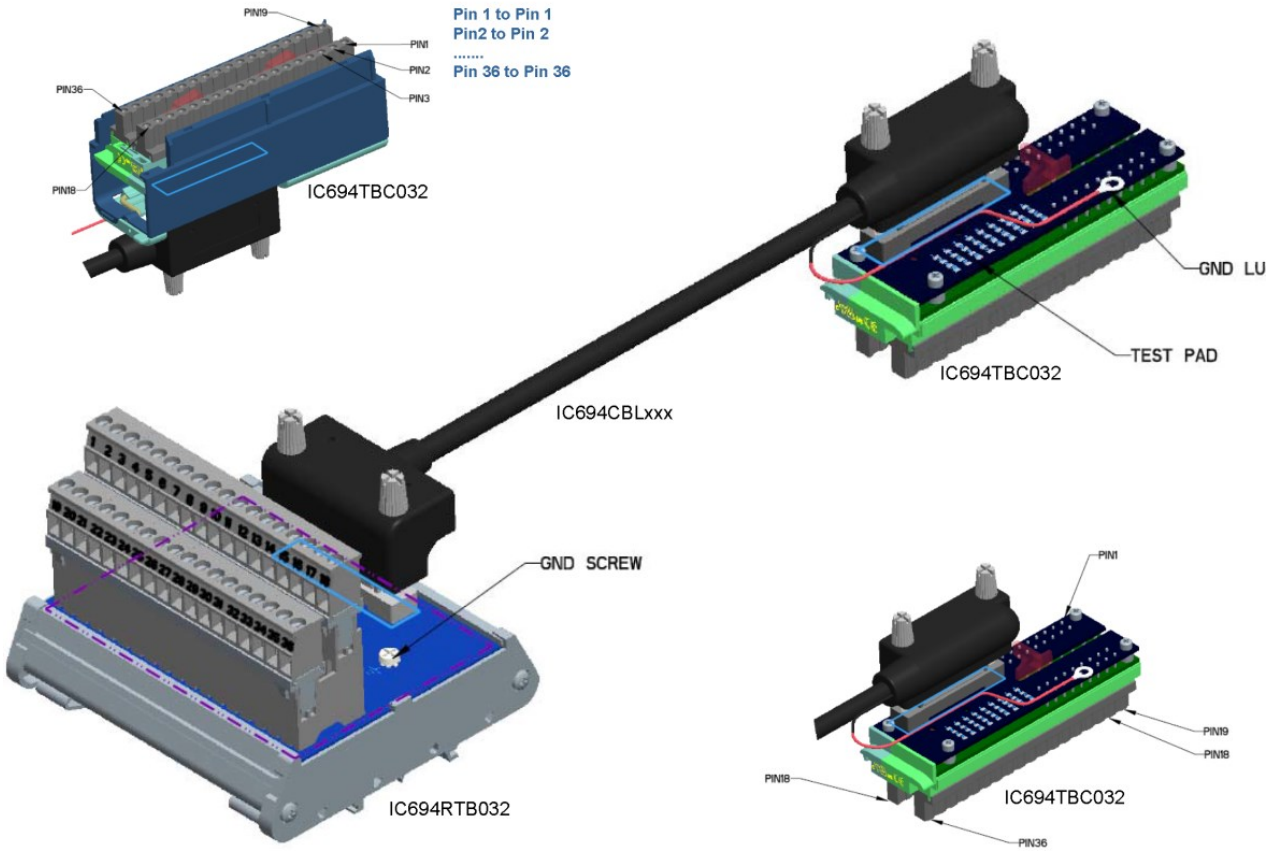

Figure 462: High-Density Compact Remote Terminal Base IC694RTB032 Usage

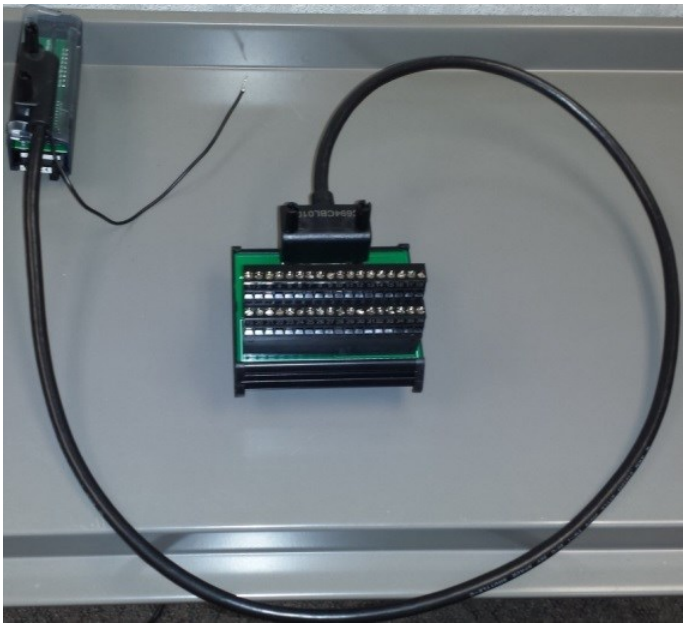

Components for High-Density, Shielded 36-TBQC

Part Number	Description	Compatibility
IC694TBB032	Box-Style 36-point Terminal Block (refer to Section 17.1.1, IC694TBB032 and TBB132 Box-Style Terminal Blocks, 36 Terminals).	As listed throughout the manual.
IC694TBC032	High-Density terminal block with single 36-pin D-connector.	IC695ALGxxx, IC69xMDL660 and IC694MDL664 modules only. Discrete output modules and Thermocouple modules are not supported.
IC694RTB032	High-Density remote base, with 36-pin D-connector, shield ground lug and with a 36-point removable terminal block.	IC695ALGxxx, IC69xMDL660 and IC694MDL664 modules only. Discrete output modules and Thermocouple modules are not supported.
IC694CBL005	Shielded 0.5-meter cable with 36-pin D-connector termination on both ends.	IC694TBC032 and IC694TBB032 only
IC694CBL010	Shielded 1.0-meter cable with 36-pin D-connector termination on both ends.	IC694TBC032 and IC694TBB032 only
IC694CBL030	Shielded 3.0-meter cable with 36-pin D-connector termination on both ends.	IC694TBC032 and IC694TBB032 only
IC694CBL130	Shielded 3.0-meter cable with 36-pin D-connector termination on the end that connects to the IC694TBC032 terminal block. The other end is unterminated.	IC694TBC032 only

IC694RTB032 High-Density Remote Base, 36-Terminal

Figure 463: IC694RTB032 High-Density Remote Base, 36-Terminal

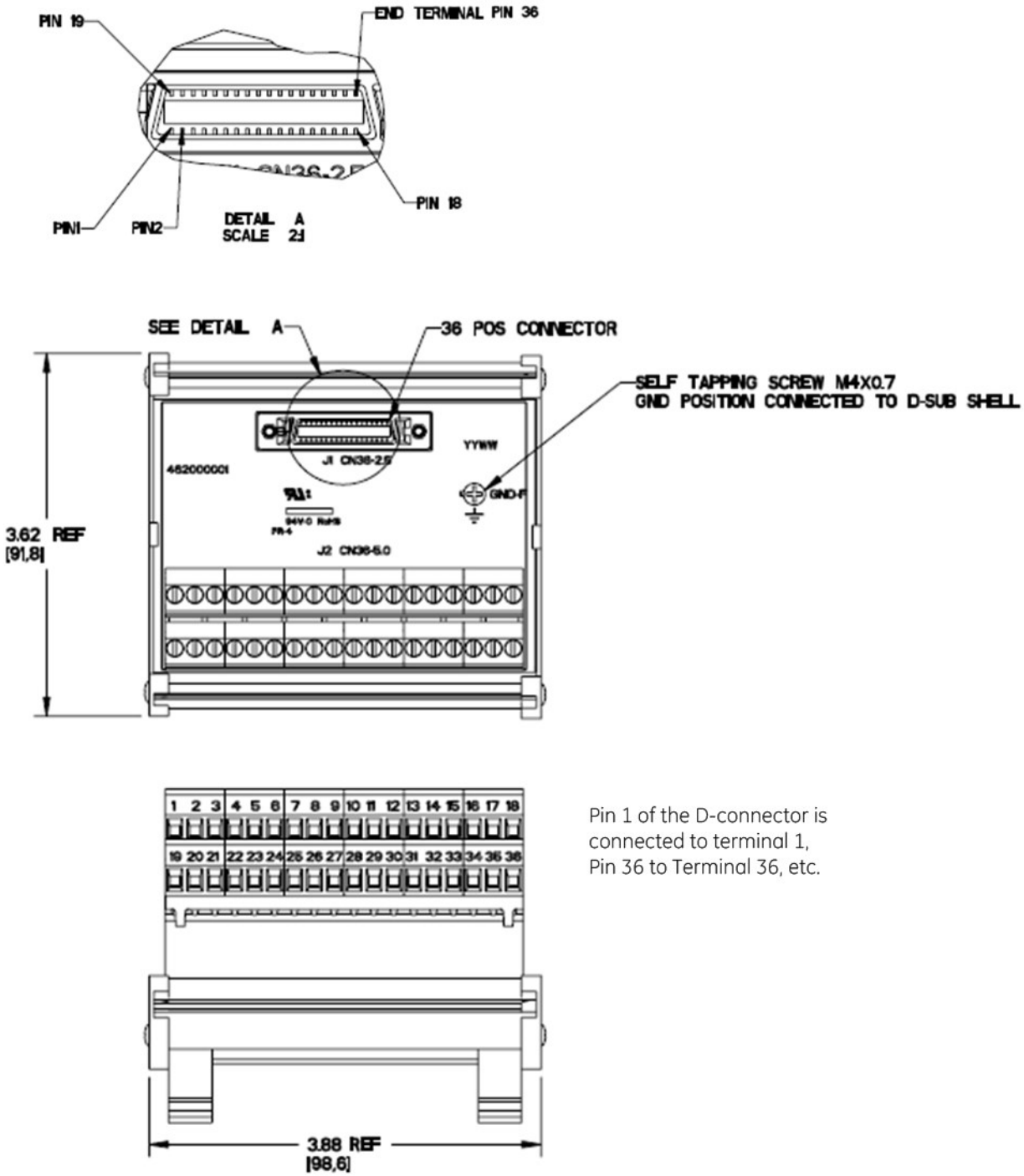

Pin 1 of the D-connector is connected to terminal 1, Pin 36 to Terminal 36, etc.

IC694TBC032 High-Density Terminal Block with Single 36-Pin D-Connector

To connect the remote terminal block IC694RTB032 to an I/O module, the I/O module must be fitted with an IC694TBC032 terminal block.

Since both the I/O module and the remote terminal block are fitted with 36-point D-connectors, only one cable is required to interconnect the two. Additionally, both ends are equipped to handle shielded cables. These features provide a significant advantage over the IC693ACC377 TBQC.

Figure 464: IC694TBC032 High-Density Terminal Block with Single 36-Pin D Connector

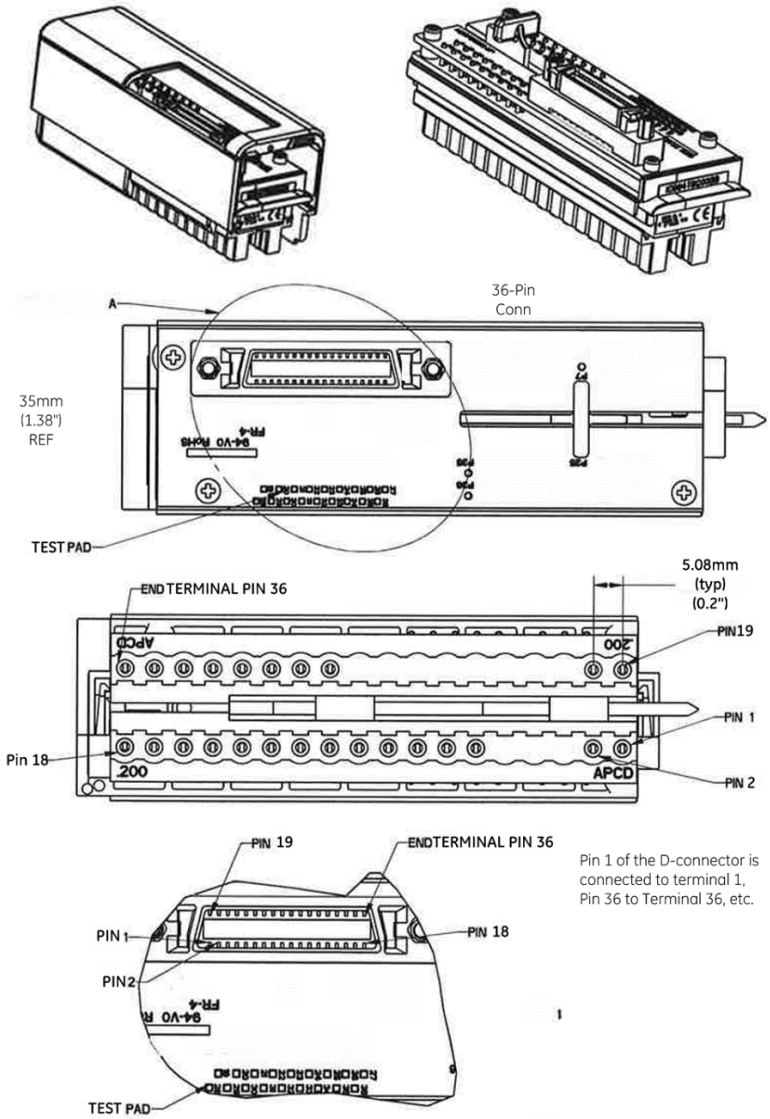
36-Pin
Conn
A
35mm
(1.38")
REF
TEST PAD
END TERMINAL PIN 36
5.08mm
(typ)
(0.2")
PIN19
PIN 1
Pin 18
PIN 2
PIN 19
END TERMINAL PIN 36
PIN 1
PIN 18
PIN2
TEST PAD
Pin 1 of the D-connector is
connected to terminal 1,
Pin 36 to Terminal 36, etc.

IC694CBL* Cable Wiring Details

Figure 465: IC694CBL* Cable Wiring Details

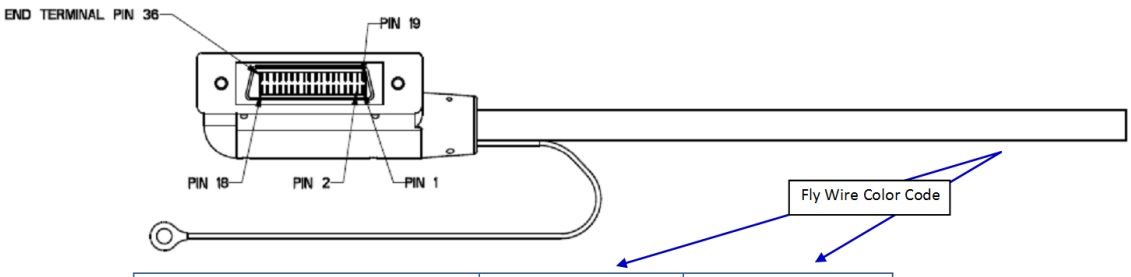

TERMINAL BLOCK / CABLE CONNECTOR PIN	MAIN WIRE COLOR	ACCENT WIRE COLOR
SHELL	BRAID LUG	--
1	BROWN	RED
2	LIGHT GRAY	BROWN
3	BLUE	BROWN
4	ORANGE	BROWN
5	RED	BROWN
6	VIOLET	WHITE
7	GREEN	WHITE
8	ORANGE	WHITE
9	BROWN	WHITE
10	PINK	--
11	WHITE	--
12	VIOLET	--
13	BLUE	--
14	GREEN	--
15	YELLOW	--
16	ORANGE	--
17	RED	--
18	BROWN	--
19	LIGHT GRAY	RED
20	PINK	BROWN
21	VIOLET	BROWN
22	GREEN	BROWN
23	YELLOW	BROWN
24	LIGHT GRAY	WHITE
25	BLUE	WHITE
26	YELLOW	WHITE
27	RED	WHITE
28	PINK	BLACK
29	WHITE	BLACK
30	VIOLET	BLACK
31	BLUE	BLACK
32	GREEN	BLACK
33	YELLOW	BLACK
34	ORANGE	BLACK
35	RED	BLACK
36	BROWN	BLACK

Appendix A: Product Certifications and Installation Guidelines for Conformance

This appendix describes the compliance markings that appear on PACSystems RX3i products and the corresponding standards to which the products have been certified. This appendix also provides installation requirements for conformance to standards and additional safety guidelines for installing in the European Union.

A.1 RX3i Agency Approvals

Description	Agency Standard or Marking	Comments
N.A. Safety for Industrial Control Equipment	c UL us LISTED	Certification by Underwriter's Laboratories to UL508 standard and equivalent CSA C22.2 No 142 - M1987standard
N.A. Safety for Hazardous Areas Class I, Div. 2, Groups A, B, C, D	c UL us LISTED	Certification by Underwriter's Laboratories to ISA 12.12.01 standard and equivalent CSA C22.2 No 213-M1987 standard
Low Voltage Directive European Safety for Industrial Control Equipment	CE	Self-Declaration in accordance with European Directives; Refer to Declaration of Conformity found at the Emerson support link located at the end of this document for a complete list of approved products
Electromagnetic Compatibility Directive European EMC for Industrial Control Equipment	CE	Certification by Competent Body in accordance with European Directives; Refer to Declaration of Conformity found at the Emerson support link located at the end of this document for a complete list of approved products
Explosive Atmospheres Directive European Safety for Hazardous Areas Equipment Group II, Category 3, Gas Groups A, B, C	Ex	Certification in accordance with European Directives and Independent 3rd Party Assessment Certificate; Refer to Declaration of Conformity found at the Emerson support link located at the end of this document for complete list of approved products

Note: The agency approvals listed above and on the Declaration of Conformities are believed to be accurate; however, agency approvals for a product should be verified by the marking on the unit itself.

A.2 UL Class 1 Division 2 Hazardous Areas Requirements

The following statements are required to display for Class I Division 2 Hazardous Locations:

1. EQUIPMENT LABELED WITH REFERENCE TO CLASS I, GROUPS A, B, C, and D, DIV. 2 HAZARDOUS LOCATIONS IS SUITABLE FOR USE IN CLASS I, DIVISION 2, GROUPS A, B, C, D OR NON–HAZARDOUS LOCATIONS ONLY.
2. WARNING – EXPLOSION HAZARD – SUBSTITUTION OF COMPONENTS MAY IMPAIR SUITABILITY FOR CLASS I, DIVISION 2.
3. WARNING – EXPLOSION HAZARD – DO NOT DISCONNECT EQUIPMENT UNLESS POWER HAS BEEN SWITCHED OFF OR THE AREA IS KNOWN TO BE NON–HAZARDOUS.
4. EQUIPMENT SHALL BE INSTALLED INTO AN ENCLOSURE THAT IS ONLY ACCESSIBLE WITH THE USE OF A TOOL

A.3 ATEX Zone 2 Hazardous Areas Requirements

To maintain compliance with the ATEX Directive, an RX3i system located in a Zone 2 area (Category 3) must be installed within a protective enclosure meeting the following criteria:

- IP54 or greater
- Mechanical strength to withstand an impact energy of 3.5 Joules
- Only accessible with the use of a tool

A.4 DNVGL Type Approval Requirements

DNVGL Type approval covers only hardware listed on certificate. For system applications classed by DNVGL where additional hardware is used, system documentation is to be submitted by system design manufacturer.

For additional information on the DNVGL certificate, please contact us at the Support link located at the end of this document.

A.5 Standards

PACSystems RX3i Environmental Specifications

Specification	Regulation	Description
Vibration	IEC60068-2-6, JISC0911	10-57 Hz, 0.0524 mm (0.006 in) displacement peak-peak 57-500 Hz, 1.0 g acceleration
Shock	IEC60068-2-27, JISC0912	15G, 11 ms
Operating Temperature		0 to 60°C: [inlet] (32 to 140°F)
Storage Temperature		-40 to +85°C (-40 to 185°F)
Humidity		5 to 95%, non-condensing

A.6 Additional RX3i Specifications

Standards for EMC Emissions, and Immunity, for RX3i products are provided on the following pages. Refer to the listing of module catalog numbers below to determine which set of standards applies to a specific module: Specifications Group 1 or Group 2.

Group 1 Table

IC694ACC300	IC694DNM200	IC694MDL390	IC694MDL740
IC694ALG220	IC694DNS201	IC694MDL632	IC694MDL741
IC694ALG221	IC694DSM314	IC694MDL634	IC694MDL742
IC694ALG390	IC694DSM324	IC694MDL635	IC694MDL752
IC694ALG391	IC694MDL230	IC694MDL645	IC694MDL753
IC694ALG392	IC694MDL231	IC694MDL646	IC694MDL758
IC694APU300	IC694MDL240	IC694MDL648	IC694MDL930
IC694APU305	IC694MDL241	IC694MDL654	IC694MDL931
IC694BEM320	IC694MDL250	IC694MDL655	IC694MDL940
IC694BEM321	IC694MDL310	IC694MDL658	IC694MDR390
IC694BEM340	IC694MDL330	IC694MDL730	IC694PWR321
IC694BEM341	IC694MDL340	IC694MDL732	IC694PWR330
IC694CHS392	IC694MDL350	IC694MDL734	IC694PWR331
IC694CHS398			

Group 2 Table

IC694ALG222	IC695ALG106	IC695CMM002	IC695HSC304
IC694ALG223	IC695ALG112	IC695CMM004	IC695HSC308
IC694ALG232	IC695ALG306	IC695CMU310	IC695LRE001
IC694ALG233	IC695ALG312	IC695CMX128	IC695MDL664
IC694ALG442	IC695ALG412	IC695CNM001	IC695MDL765
IC694ALG542	IC695ALG508	IC695CPE302[105]	IC695NIU001
IC694BEM331	IC695ALG600	IC695CPE305[105]	IC695NIU001 PLUS
IC694CEE001	IC695ALG608	IC695CPE310[105]	IC695PBM300
IC694MDL260	IC695ALG616	IC695CPE330	IC695PBS301
IC694MDL660	IC695ALG626	IC695CPU310	IC695PMM335
IC694MDL754	IC695ALG628	IC695CPU315	IC695PNC001
IC694MDL916	IC695ALG704	IC695CPU320	IC695PNS001
IC695ACC302	IC695ALG708	IC695CRE311	IC695PNS101
IC695ACC400	IC695ALG808	IC695CRH---	IC695PRS015
IC695ACC401	IC695CEP001	IC695CRU320	IC695PSA040
IC695ACC650	IC695CHS007	IC695ECM850	IC695PSA140
IC695ACC651	IC695CHS012	IC695EDS001	IC695PSD040
IC695FTB001	IC695CHS016	IC695EIS001	IC695PSD140
	IC695CHS007PCIONLY	IC695ETM001	IC695RMX128
	IC695CHS012PCIONLY	IC695GCG001	IC695RMX228
	IC695CHS016PCIONLY		

[105] Unless otherwise explicitly stated / differentiated all the statements are equally applicable to both the versions Axxx and Bxxx of these controllers.

Specifications Group 1

EMC EMISSIONS

Emission Type	Regulation	Specification
Radiated (Group 1, Class A)	CISPR 11/EN 55011/ EN55016-2-3	30 – 230 MHz 50.4 dBµV/m 230 – 1000 MHz 57.4 dBµV/m
	47 CFR 15	30 – 88 MHz 49.5 dBµV/m 88 – 216 MHz 53.9 dBµV/m 216 -960 MHz 56.8 dBµV/m ≥ 960 MHz 59.9 dBµV/m

EMC IMMUNITY[106]

Immunity Type	Regulation	Specification
Electrostatic Discharge	EN 61000-4-2[107]	±8 kV Air, ±4 kV Contact
RF Susceptibility	EN 61000-4-3[107]	10 V_{rms} /m, 80 to 1000 MHz, 80% AM, 1 kHz sine-wave
Fast Transient Burst	EN 61000-4-4[107]	AC/DC Input Power: ±2 kV direct Discrete I/O, Communication: ±1kV (clamp) [107] Analog I/O: ±0.25 kV (clamp)
Damped Oscillatory Wave	ANSI/IEEE C37.90a, EN 61000-4-12[107] EN 61000-4-18	AC/DC Input Power: +2.5 kV I/O, Communication: +2.5 kV[108]
Voltage Surge	EN 61000-4-5[107]	AC/DC Input Power: ±2 kV (12 Ω) CM I/O, Communication: ±1 kV (42 Ω) CM[108]
Conducted RF	EN 61000-4-6[107]	Communication: 10V_{rms}, 0.15 to 80 MHz, 80% AM[109]
Voltage Dips and Interrupts	EN 61000-4-11[107]	AC/DC Input Power: 30% and 100% Nominal (10ms)
Voltage Variation	EN 61000-4-11[107]	AC Input Power: ± 10% (10s) DC Input Power: ± 20% (10s)

[106] *Although a few modules were tested according to the Voltage Surge test, modules were primarily tested to the Damped Oscillatory Wave test.*

[107] *EN 61000-4-x series of tests are technically equivalent to the IEC 61000-4-x series.*

[108] *Not applicable to communication or I/O lines with maximum installed length less than 30 m (98 ft).*

[109] *Not applicable to communication lines with maximum installed length less than 30 m (98 ft).*

Specifications Group 2

EMC EMISSIONS

Emission Type	Regulation	Specification
Radiated (Group 1, Class A)	CISPR 11/EN 55011 / EN55016-2-3	30 – 230 MHz 50.4 dBµV/m 230 – 1000 MHz 57.4 dBµV/m
	47 CFR 15	30 – 88 MHz 49.5 dBµV/m 88 – 216 MHz 53.9 dBµV/m 216 -960 MHz 56.8 dBµV/m ≥ 960 MHz 59.9 dBµV/m
Conducted (Group 1, Class A)	CISPR 11/EN 55011 / EN55016-2-1 47 CFR 15	0.15 – 0.5 MHz: 79/66 dBµV (qp/avg) 0.5 – 30 MHz: 73/60 dBµV (qp/avg)
Harmonic	EN61000-3-2	Class A

EMC IMMUNITY

Immunity Type	Regulation	Specification
Electrostatic Discharge	EN 61000-4-2[110]	±8 kV Air, ±4 kV Contact
RF Susceptibility	EN 61000-4-3[110]	10 V_{rms} /m, 80 to 1000 MHz, 80% AM, 1kHz sine-wave 3 V_{rms} /m, 1.0 to 2.7 GHz, 80% AM, 1 kHz sine-wave
	ENV 50140/ ENV 50204	10 V_{rms} /m, 900 ± 5 MHz, 100% PM, 200 Hz square-wave
Fast Transient Burst[111]	EN 61000-4-4[110]	AC/DC Power: ±2 kV direct Signal: ±1 kV cap coupled
Voltage Surge	EN 61000-4-5[110]	Equipment Power AC: ±2 kV CM, ±1 kV DM DC[112]: ±0.5 kV CM, ±0.5 kV DM I/O Power and Auxiliary Output Power AC: ±2 kV CM, ±1 kV DM DC[112]: ±0.5 kV CM, ±0.5 kV DM Shielded Signal[113]: ±1 kV CM Unshielded Communication Signal[113]: ±1 kV CM Unshielded I/O Signal[113:] ±1kV CM, ±0.5 kV DM

[110] *EN 61000-4-x series of tests are technically equivalent to the IEC 61000-4-x series.*

[111] *Not applicable for communication, I/O, I/O power, Auxiliary power output or DC Input power lines where the maximum installed length is less than 3 m (9.1ft).*

[112] *Not applicable to ports limited to 30 m (98 ft) or less.*

[113] *Not applicable to RS232 ports and those ports limited to 30 m (98 ft) or less*

Immunity Type	Regulation	Specification
Damped Oscillatory Wave	ANSI/IEEE C37.90a, EN 61000-4-12[110] EN 61000-4-18	1 MHz, 400 Hz rep rate AC Power: ±2.5 kV CM and DM (200 Ω) DC Power[111]: ±2.5 kV CM and DM (200 Ω) Signal: ±2.5 kV CM (200 Ω)
Conducted RF	EN 61000-4-6[110]	AC/DC Power, Signal: 10 V_{rms}, 0.15 to 80 MHz, 80% AM [114]
Voltage Dips & Interrupts	EN 61000-4-11[110]	AC Input Power: 30% Nominal (0.5 period); 60% Nominal (5.50 periods); >95% Nominal (250 periods)
Voltage Variation	EN 61000-4-11[110]	AC Input Power: ±10% (50,000 periods)
Voltage Flicker	EN 61000-3-3	AC Input Power: $d_{max} \leq 4\%$

[114] *Not applicable to communication or I/O lines with maximum installed length 3 m (09.1 ft) or less*

A.7 Government Regulations

U.S., Canadian, Australian, and European regulations are intended to prevent equipment from interfering with approved transmissions or with the operation of other equipment through the AC power source.

The PACSystems RX3i family of products has been tested and found to meet or exceed the requirements of U.S. (47 CFR 15), Canadian (ICES-003), Australian (AS/NZS 3548), and European (EN55011) regulations for Class A digital devices when installed in accordance with the guidelines noted in this manual. These various regulations share commonality in content and test levels with that of CISPR 11 and based on this commonality testing to each individual standard was deemed inappropriate.

The FCC requires the following note to be published according to FCC guidelines:

Note: This equipment has been tested and found to comply with the limits for a Class A digital device, pursuant to Part 15 of the FCC Rules. These limits are designed to provide reasonable protection against harmful interference when the equipment is operated in a commercial environment. This equipment generates, uses, and can radiate radio frequency energy and, if not installed and used in accordance with the instruction manual, may cause harmful interference to radio communications. Operation of this equipment in a residential area is likely to cause harmful interference in which case the user will be required to correct the interference at their own expense.

Industry Canada requires the following note to be published:

Note: This Class A digital apparatus complies with Canadian ICES-003.

Modules released after August 2012 require the following information be marked on the unit or appear in user documentation:

CAN ICES-3 (A)/NMB-3 (A)

A.8 Installation Guidelines for Conformance to Standards

To meet U.S., Canadian, Australian, and European regulations for Class A digital devices and maintain CE Mark compliance, RX3i installations that include the products listed in the following table must be installed in a metal enclosure with external wiring routed in metal conduit as described in this appendix. Modules not listed must still be installed in a protective enclosure as described in Chapter 2, Installation.

Modules Requiring Installation in a Metal Enclosure

Description	Catalog Number
Series 90-30 Input Analog 4-point Voltage	IC693ALG220
Series 90-30 Input Analog 16sgl Current	IC693ALG223
RX3i Input Analog 16sgl Current	IC694ALG223
Series 90-30 Output Analog 2-point Voltage	IC693ALG390
RX3i Output Analog 2-point Voltage	IC694ALG390
Series 90-30 Output Analog 2-point Current	IC693ALG391
RX3i Output Analog 2-point Current	IC694ALG391
RX3i Analog Output 8-Channel Current/Voltage	IC694ALG392
Series 90-30 Analog Combination Current/Voltage 4in/2out	IC693ALG442
RX3i Analog Combination Current/Voltage 4in/2out	IC694ALG442
RX3i Analog Module 4-Input 2-Output Current/Voltage with Advanced Diagnostics	IC694ALG542
Series 90-30 I/O Link Module (Slave)	IC693BEM320
RX3i I/O Link Interface Module	IC694BEM320
Series 90-30 I/O Link Module (Master)	IC693BEM321
RX3i I/O Link Master Module	IC694BEM321
Series 90-30 10-Slot Expansion Backplane	IC693CHS392
RX3i 10-Slot Serial Expansion Backplane	IC694CHS392
Series 90-30 Remote Baseplate, 10 Slots	IC693CHS393
Series 90-30 Remote Baseplate, 5 Slots	IC693CHS399
RX3i Control Memory Xchange Module	IC695CMX128
Series 90-30 DSM314 Motion Controller	IC693DSM314
RX3i DSM314 Motion Controller	IC694DSM314
RX3i DSM324 Motion Controller	IC694DSM324
Series 90-30 Mixed I/O 8-point 120 Vac In / 8-point Relay Out	IC693MAR590
Series 90-30 Input 120 Vac 8-point Isolated	IC693MDL230
RX3i Input 120 Vac 8-point Isolated	IC694MDL230
Series 90-30 Input 240 Vac 8-point Isolated	IC693MDL231
RX3i Input 240 Vac 8-point Isolated	IC694MDL231

Description	Catalog Number
Series 90-30 Input 120 Vac 16-point	IC693MDL240
RX3i Input 120 Vac 16-point	IC694MDL240
Series 90-30 Input 24 Vac 16-point	IC693MDL241
RX3i Input 24 Vac 16-point	IC694MDL241
Series 90-30 Output 120 Vac 0.5 12-point	IC693MDL310
RX3i Output 120 Vac 0.5 A 12 Point	IC694MDL310
Series 90-30 Output 120/240 Vac 2 A 8-point	IC693MDL330
RX3i Output 120/240 Vac 2 A 8-point	IC694MDL330
Series 90-30 Output 120 Vac 0.5 A 16-point	IC693MDL340
RX3i Output 120 Vac 0.5 A 16-point	IC694MDL340
Series 90-30 Output 120/240 Vac 2 A 5-point Isolated	IC693MDL390
RX3i Output 120/240 Vac 2 A 5-point Isolated	IC694MDL390
Series 90-30 Input 125 Vdc 8-point Pos/Neg Logic	IC693MDL632
RX3i Input 125 Vdc 8-point Pos/Neg Logic	IC694MDL632
Series 90-30 Input 5/12 Vdc (TTL) 32-point Pos/Neg	IC693MDL654
RX3i Input 5/12 Vdc (TTL) 32-point Pos/Neg	IC694MDL654
Series 90-30 Output 12/24 Vdc 0.5 A 8-point Positive Logic	IC693MDL732
RX3i Output 12/24 Vdc 0.5 A 8-point Positive Logic	IC694MDL732
Series 90-30 Output 12/24 Vdc 0.5 A 8-point Negative Logic	IC693MDL733
Series 90-30 Output 125 Vdc 1 A 6-point Isolated Pos/Neg	IC693MDL734
RX3i Output 125 Vdc 1 A 6-Point Isolated Pos/Neg	IC694MDL734
Series 90-30 Output 5/24 Vdc (TTL) 0.5 A 32-point Negative Logic	IC693MDL752
RX3i Output 5/24 Vdc (TTL) 0.5 A 32-point Negative Logic	IC694MDL752
Series 90-30 Solenoid Out 11-point/24 Vdc Out 5-point Positive Logic	IC693MDL760
Series 90-30 Output Relay 4 A 8-point Isolated	IC693MDL930
RX3i Output Relay N.O. 4 A 8-point Isolated	IC694MDL930
Series 90-30 Mixed I/O 8-point 24 Vdc In/8-point Relay Out	IC693MDR390
RX3i Mixed I/O 24 Vdc Input (8-point) N.O. Relay Output (8-point)	IC694MDR390
RX3i Redundancy Memory Xchange Module, Multi-mode fiber	IC695RMX128
RX3i Redundancy Memory Xchange Module, Single-mode fiber	IC695RMX228

A.9 Requirements for Installation in a Metal Enclosure

- Backplanes must be mounted in a metal enclosure with a metal-on-metal connection around the door or the equivalent. All surfaces of the enclosure must be adequately grounded to adjacent surfaces to provide electrical conductivity.
- Wiring external to the enclosure must be routed in metal conduit or the equivalent. Using shielded cables and power line filtering, as detailed in the A.10 Shielded Cable Alternative to Conduit, is equivalent to using metal conduit.
- The conduit must be mounted to the enclosure using standard procedures and hardware to ensure electrical conductivity between the enclosure and conduit. The termination for the shielded cable alternative to conduit is detailed in the section, *Shielded Cable Alternative to Conduit*.

A.10 Shielded Cable Alternative to Conduit

This section describes the installation requirements for using shielded cable as an alternative to metal conduit for meeting radiated emissions requirements (EN 55011, 47CFR15, and such). The following practices could be used in place of conduit for systems or cables that require conduit or the equivalent.

Communication Cables

All communication lines should be double-shielded. The outside braided shield (85% coverage) must be terminated at the entrance to the enclosure and not continue within the enclosure. The inside shield should be left intact since it shields the communication line from noise within the enclosure and is terminated to the connector shell. The RX3i communication port connector shells are directly tied to frame ground. To prevent ground loop currents, one cable end of the inside shield should be capacitively-coupled to its shell. The outside shield is classified as an RF shield and should be insulated from the inside shield.

An alternative to double-shielded cable for Genius bus communications is Eupen* CMS cable, equivalent Genius cables with an RF-absorptive material outer coating. The shield should be terminated per standard Genius wiring guidelines.

*Telephone: 32 87 55 47 71 (Europe), 908-919-1100 (U.S.A.)

I/O Cables

All I/O lines leaving the enclosure must have at least 85% braided shield coverage terminated at the entrance to the enclosure. This 85% RF shield should not continue into the enclosure. Eighty-five percent braided shield is a standard cable available with various wire sizes and quantities from many cable manufacturers.

Analog/High-Speed Cables

Analog or high-speed lines, which require shielded cable for immunity, should be double-shielded. The outside braided shield should be terminated at the entrance to the enclosure and not continue within the enclosure. The inside shield should be terminated per standard installation instructions. The outside shield is classified as an RF shield and should be insulated from the inside shield.

Power Input to Enclosure (for IC694 Power Supplies)

An alternative to shielded input cables is to use RF filters to minimize the noise coupled back onto the power supply inputs. If RF filters are used at the point of enclosure entry, unshielded wires may be used inside and outside the enclosure.

AC Power Input RF Filter Requirements

- Type: Common mode/Differential mode line filter
- Effective range: between 30–300 MHz
- Leakage current: <0.8 mA
- Insertion loss >30 decibels at 30 MHz, >20 decibels at 100 MHz, >15 decibels at 300 MHz

DC Power Input RF Filter Requirements

- Type: Feed-through, π type EMI ceramic filter
- Capacitance: 1500 pF (minimum)
- WVDC: 100 V
- Current rating: As needed for application
- Insertion Loss: >50 decibels at 100 MHz

Shield Termination

Termination of RF shields is extremely important in the reduction of RF emissions. The RF shields should be terminated at the entrance to the enclosure with a 360 degree contact between the shield and the enclosure wall.

Compression Connectors

Compression connectors are standard hardware available for the termination of conduit. The diameter of the connectors is not of significant importance other than to make sure the wires can actually fit through them. The compression connector provides a metal ring for shield termination and compression.

Figure 466: Unshielded I/O Cable, Single Shield (Side View)

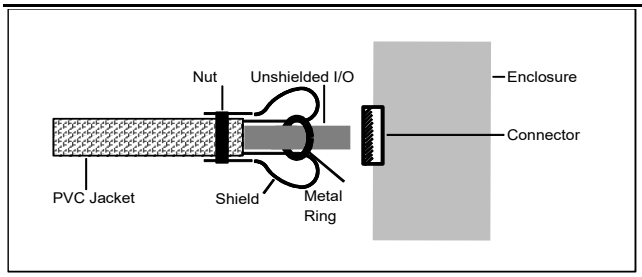

Figure 467: Multiple Communication/High-Speed Cables, Single RF Shield (Side View)

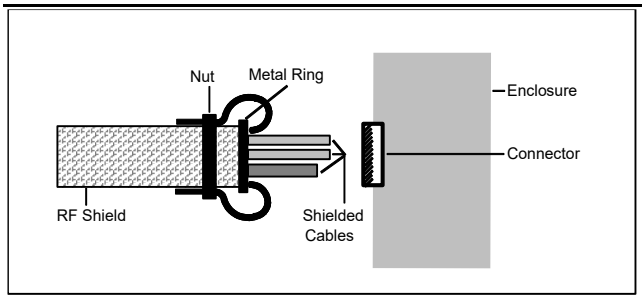

Specialty Shielded Cable Vendors

Eupen specializes in RF-absorptive material outer coating cables (CMS cables). Ask for equivalent Genius cables.

Glenair, Inc. specializes in convoluted tubing (Series 72 and 74) and in flexible metal-core conduit (Series 75). They also carry various kinds of shield termination connectors.

Zippertubing Co. specializes in after installation zip-on shielding where different types of shielding can be selected. Recommended types of shielding are SHN-3, SH1, and SH3 to provide 85% coverage.

Safety-Related Guidelines for Installation in the European Union

This section provides safety-related guidelines specifically for control system products to be installed in the European Union. It is assumed that personnel who install, operate, and maintain automation systems that include products are trained and qualified to perform those functions:

1. **General:**

Emerson product manuals provide information required for the intended use of these products. The product manuals are written for technically qualified personnel such as engineers, programmers, or maintenance specialists who have been specifically trained and are experienced in the field of automation control. Such personnel must possess the knowledge to correctly interpret and apply the safety guidelines provided in the product manuals. If you require further information or face special problems that are not covered in sufficient detail in the product manuals, please contact your local sales or service office, or authorized distributor.

2. **Qualified Personnel**:

Only qualified personnel should be allowed to specify, apply, install, operate, maintain, or perform any other function related to the products described in the product manuals. Examples of such qualified persons are defined as follows:

- System application and design engineers who are familiar with the safety concepts of automation equipment.
- Installation, startup, and service personnel who are trained to install and maintain such automation equipment.
- Operating personnel trained to operate automation equipment and trained on the specific safety issues and requirements of the particular equipment.

3. **Proper Usage:**

The equipment/system or the system components may be used only as described in the product manuals. Our control system products have been developed, manufactured, tested, and the documentation compiled in keeping with the relevant safety standards. Handling instructions and safety guidelines described for planning, installation, proper operation and maintenance must be followed to ensure safe application and use of the products.

4. **Guidelines for the Application Planning and Installation of the Product:**

RX3i control system products generally form part of larger systems or installations. These guidelines are intended to help integrate RX3i control system products into systems and installations without constituting a source of danger. The following precautions must be followed:

- Compliance with EN292-1 and EN292-2 (Safety of Machinery) as well as EN60204/IEC204 (Electrical Equipment of Industrial Machines) must be observed during the design phase.
- Opening the housing or the protective cover exposes certain parts of this equipment/system, which could have a dangerously high voltage level.
- Only qualified personnel should be allowed access to this equipment/system. These persons must be knowledgeable of potential sources of danger and maintenance measures as described in the product manuals.
- Personnel must strictly adhere to applicable safety and accident prevention rules and regulations.
- A suitable isolating switch or fuses must be provided in the building wiring system. The equipment must be connected to a protective ground (PE) conductor.
- For equipment or systems with a fixed connecting cable but no isolating switch that disconnects all poles, a power socket with the grounding pin must be installed.
- Before switching on the equipment, make sure that the voltage range setting on the equipment corresponds to the local power system voltage.
- In the case of equipment operating on 24 Vdc, make sure that proper electrical isolation is provided between the main supply and

the 24 Vdc supply. Use only power supplies that meet EN60204 (IEC204) requirements.

- The RX3i control system AC power supply must be supplied through an IEC-rated isolation transformer.
- Power supply to the RX3i control system must be controlled not to exceed overvoltage category II per EN60204-1 (IEC204).
- Do not exceed the input specifications of the power supply. Otherwise, functional failures or dangerous conditions can occur in the electronic modules/equipment.
- Emergency shutoff devices in accordance with EN60204/IEC204 must be effective in all operating modes of the automation equipment. Resetting the emergency off device must not result in any uncontrolled or undefined restart of the equipment.
- Automation equipment and its operating elements must be installed in such a manner as to prevent unintentional operation.
- Suitable measurements must be taken to ensure that operating sequences interrupted by a voltage dip or power supply failure resume proper operation when the power supply is restored. Care must be taken to ensure that dangerous operating conditions do not occur even momentarily. If necessary, the equipment must be forced into the *emergency off* state.
- Negative Logic Input and Output Modules cannot be used.
- Cable shielding and grounding are the responsibility of the machine builder. Applicable installation instructions and guidelines must be followed.
- Install the power supply and signal cables in such a manner as to prevent inductive and capacitive interference voltages from affecting automation functions.
- When interfacing the inputs and outputs of the automation equipment, measures must be taken to prevent an undefined state from being assumed in the case of a wire break in the signal lines

Appendix B: Calculating Heat Dissipation

This section explains how to find the total heat dissipation of PACSystems RX3i equipment.

PACSystems RX3i equipment must be mounted in a protective enclosure. The enclosure must be able to properly dissipate the heat produced by all the devices mounted inside. This includes Modules, discrete output devices, and discrete input devices. Each device manufacturer publishes these values. If an exact value is not available for a device, you can make a close estimate by obtaining the value for a similar device.

B.1 Module Heat Dissipation

For each backplane and module except power supplies (discussed separately), look up the power in Watts from the table in Section 4.2, Module Load Requirements. If Module uses more than one voltage type (for example, 3.3 V and 24 V relay), find its total power requirement. Then, add together the heat dissipation values for all Modules in the enclosure.

Example:

The Load Requirements table shows that the 12-Slot Universal Backplane IC695CHS012 draws:

1.98 Watts from the 3.3 Vdc supply

+1.20 Watts from the 5 Vdc supply

=3.18 Watts total heat dissipation of backplane IC695CHS012

B.2 Power Supply Heat Dissipation

In general, power supplies are 66% efficient. The power supply dissipates approximately 1 Watt of power in the form of heat for every 2 Watts of power it delivers to the PLC.

After finding the total power requirement for all of Modules in the backplane served by a power supply above, divide the total by 2 to find the power supply dissipation value. Do not use the rating of the power supply (such as 30 W) for this calculation because the application may not use the full capacity of the power supply.

If the +24 Vdc output on an Expansion Power Supply is being used, calculate the power drawn, divide the value by 2, and add it to the total for the power supply.

Heat Dissipation for Discrete Output Modules

In addition to Module power calculations done above, discrete solid-state output modules require a calculation for their output circuits, which are powered from another supply. (This calculation is not required for Relay Output modules.) To calculate output circuit power dissipation:

- In the specification table of Module, find the value for Output Voltage Drop.
- Using the manufacturer's documentation or other reference information, find the required current value for each device (such as a relay, pilot light, solenoid, etc.) connected to an output point on Module. Estimate the percent of "on-time" of each device based on its intended use in the application.
- Multiply the Output Voltage Drop times the current value times the estimated percent of on-time to arrive at average power dissipation for that output.

Repeat these steps for all outputs on Module, and then for all discrete output modules in the backplane.

Example:

The specifications table for the IC694MDL340 16-Point Discrete 120 Vac Output Module lists its Output Voltage Drop as: 1.5 V maximum

Use that value for all of the calculations for Module.

In this example, two output points drive solenoids that control the advance and retract travel of a hydraulic cylinder. The solenoid manufacturer's datasheet shows that each solenoid draws 1.0 Amp. The cylinder advances and retracts once every 60 seconds that the machine is cycling. It takes 6 seconds to advance and 6 seconds to retract. Because the cylinder takes equal time to advance and retract, both solenoids are on for equal lengths of time: 6 seconds out of every 60 seconds, which is 10% of the time. Therefore, since both solenoids have equal current draws and on-times, one calculation can be applied to both outputs.

Use the formula Average Power Dissipation = Voltage Drop x Current Draw (in Amps) x Percent (expressed as a decimal) of on-time:

1.5 x 1.0 x 0.10 = 0.15 W per solenoid

Then multiply this result by 2 for two identical solenoids:

0.15 W x 2 Solenoids = 0.30 W total for the two solenoids

Also in this example, the other 14 output points on the 16-point module operate pilot lights on an operator's panel. Each pilot light requires .05 Amps of current. Seven of the pilot lights are on 100% of the time and seven are on an estimated 40%.

For the seven lights that are on 100% of the time:

1.5 x .05 x 1.00 = 0.075 W per light

Then multiply this value by 7:

0.075 W x 7 lights = 0.525 W total dissipation for the first 7 lights

For the 7 lights that are on 40% of the time:

1.5 x .05 x 0.40 = .03 W per light

Then multiply this value by 7:

0.03 W x 7 lights = 0.21 W total dissipation for the other 7 lights

Adding up the individual calculations, we get:

0.30 + 0.525 + 0.21 = 1.035 W for the total output calculation for Module.

Heat Dissipation for Discrete Input Modules

In addition to Module power calculations described above, a discrete input module requires another calculation for its input circuits, because the power dissipated by the input circuits comes from a separate power source. This calculation assumes that all input circuit power delivered to these modules is eventually dissipated as heat. The procedure is:

- In the specification table of Module, find the value for Input Current.
- For DC input modules, multiply the input voltage times the current value times the estimated percent of on-time to arrive at average power dissipation for that DC input.
- For AC input modules only, multiply the input voltage times the current value times the estimated percent of on-time times 0.10 to arrive at average power dissipation for that AC input.

Repeat these steps for all inputs on Module, and then for all discrete input modules in the backplane.

Example:

The Specifications table for the IC693MDL240 16-Point Discrete 120 Vac Input Module gives the following information:

Input Current: 12 mA (typical) at rated voltage

Use this value for all of the input calculations for this module.

In this example, eight of the input points are used for switches that, for normal operation, stay on (closed) 100% of the time. These include the Emergency Stop, Over Temperature, Lube Pressure OK, and similar switches.

Use the formula Average Power Dissipation = Input Voltage x Input Current (in Amps) x Percent (expressed as a decimal) of on-time:

120 x .012 x 1.0 = 1.44 W per input

Then multiply this result by 8:

1.44 W x 8 inputs = 11.52 W total for the 8 inputs

Also in this example, two input points on this 16-point module are for the Control On and Pump Start pushbuttons. Under normal conditions, these pushbuttons are only pressed once per day for about one second

– just long enough to start up the control and pump. Therefore, their effect on our power calculation is negligible:

0.0 Watts total for two inputs

For the remaining six inputs of the 16-point module, it is estimated that they will be on for an average of 20% of the time. So, the following calculation is made for these 6 inputs:

Using the formula of Average Power Dissipation = Input Voltage x Input Current (in Amps) x Percent (expressed as a decimal) of on-time:

120 x .012 x 0.20 = 0.288 W per input

Then multiply this result by 6:

0.288 W x 6 inputs = 1.728 W total for the 6 inputs

Finally, add up the individual calculations:

11.52 + 0.0 + 1.728 = 13.248 W for the total input calculation for Module.

Total Heat Dissipation

After the individual power dissipations have been calculated, add them together to obtain total PLC heat dissipation. It is usually not necessary to include analog modules because their power dissipation values are negligible when compared with the total.

Appendix C: Cable Shield Clamping Assembly

Cable Shield Clamping Assembly, IC697ACC736, contains the parts necessary for providing higher EMC immunity for shielded cables in severe industrial environments. Shield grounding is provided by the ground plate and cable clamps in the kit.

The Cable Shield Clamping Assembly package includes:

- One ground plate
- Six cable clamps
- Four #6 self-tapping screws

Figure 468: Cable Clamp IC697ACC736 Diagrams

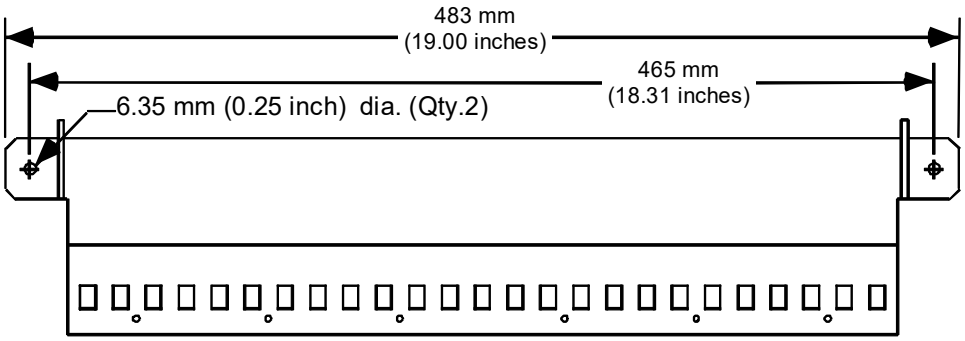

Front View with Mounting Dimensions

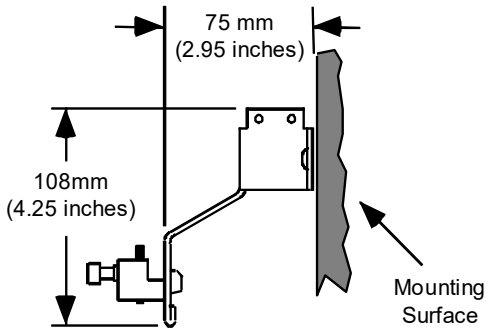

Side View with Spacing Requirements

Cable Clamp

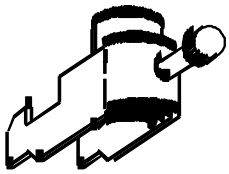

(Six cable clamps included with assembly.)

* Additional cable clamps available (12 per package), catalog number IC697ACC737.

C.1 Installing the Cable Clamp Assembly

The ground plate should be mounted near the baseplate. The cable clamp provides mechanical relief as well as electrical grounding. The cable clamp attaches to the ground plate by sliding it into two adjacent slots at the selected cable location. The cable is inserted between the ground plate and the cable clamp after removing the required section of the outer cover of the cable. Tighten the cable clamp by turning the thumbscrew clockwise. *Do not over-tighten the thumbscrew: hand-tighten or tighten lightly with a tool.*

If you are installing the ground plate on a painted surface, the paint must be removed where the ground plate is to be mounted to ensure a good ground connection between the plate and mounting surface.

C.2 Cable Diameter

The largest diameter cable that can be used with the cable clamp is 0.51 inches (13mm). The smallest cable diameter that can be used with the clamp is 0.24 inches (6mm). Multiple cables can be placed in the clamp if the cable diameter is smaller than the minimum.

Figure 469: Cable Diameter Maximum with Cable Clamp

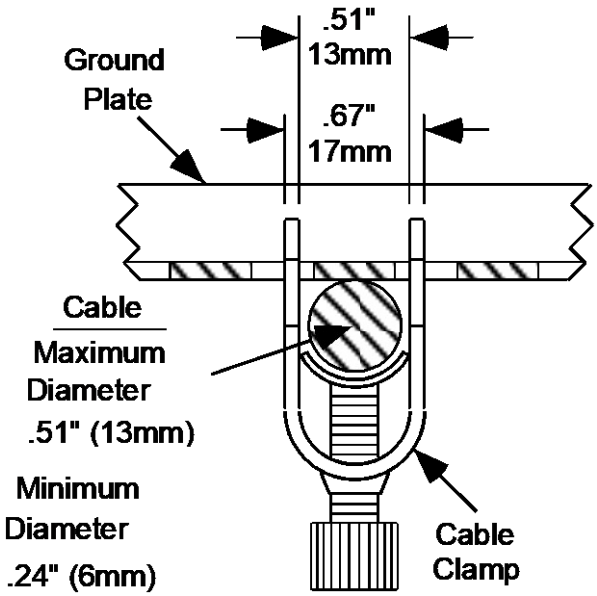
.51"
13mm
.67"
17mm
Ground
Plate
Cable
Maximum
Diameter
.51" (13mm)
Minimum
Diameter
.24" (6mm)
Cable
Clamp

Removing the Insulating Cover

The insulating cover on the shielded cable must be removed to allow maximum contact between the cable shield and the cable clamp as displayed in Figure 470.

Figure 470: Insulation Cover Removal

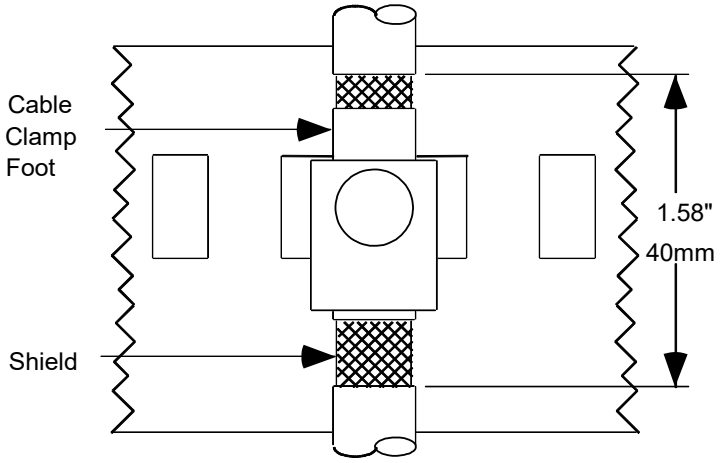

Figure 471: Typical Cable Clamp Assembly installation with Expansion Backplane

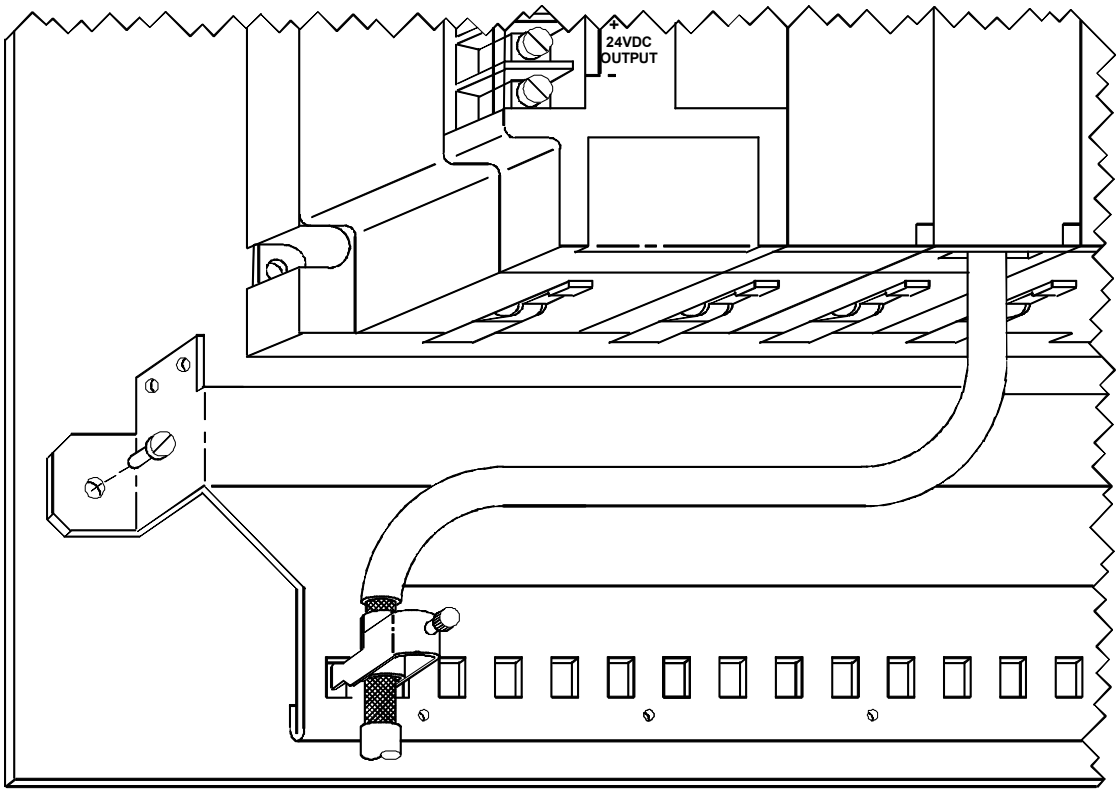

Contact Information and Support Guide

Questions? We are here to help.

Before starting a case or making a call, try searching our Knowledge Base on the Customer Center website—it might have the answer you need right away.

If you have a question, try the following steps:

Search our Knowledge Base	Open a Support Ticket	Register for a Customer Account
pacsystems.co/knowledge	pacsystems.co/support	pacsystems.co/signup

Other Helpful Links

Customer Center Home Page	Commercial Website	Contact Information
pacsystems.co/customercenter	pacsystems.co/commercial	pacsystems.co/contactus

Emerson reserves the right to modify or improve the designs or specifications of the products mentioned in this manual at any time without notice. Emerson does not assume responsibility for the selection, use or maintenance of any product. Responsibility for proper selection, use and maintenance of any Emerson product remains solely with the purchaser.

© 2025 Emerson. All rights reserved.

Emerson Terms and Conditions of Sale are available upon request. The Emerson logo is a trademark and service mark of Emerson Electric Co. All other marks are the property of their respective owners.